To Table of Contents

CONESTOGA™
WOOD SPECIALTIES

Custom Products Manual | Winter 2026

Conestoga Wood Specialties Corporation
245 Reading Road, P.O. Box 158
East Earl, Pennsylvania 17519-0158
717-445-6701

Key Contact Information			
Department	**Phone**	**Fax**	**Email**
Customer Service	(800) 838-5850	(800) 611-0730	customerservice@conestogawood.com
Special Designs	(800) 844-5932		specialdesigns@conestogawood.com
Credit	(800) 863-9561	(800) 328-6474	credit@conestogawood.com
Customer Service General Number	(800) 964-3667		

© 2026 Conestoga Wood Specialties Corporation. All the information contained herein is thought to be accurate at the time of printing. However, no responsibility is assumed by Conestoga Wood Specialties Corporation. All rights reserved. Reproduction of any part of this publication without the express written permission of Conestoga Wood Specialties Corporation is a violation of applicable laws. Order forms may be reproduced without notice to Conestoga Wood Specialties Corporation provided they are used to order Conestoga Wood Specialties Corporation products. All prices and specifications are subject to change without notice. All pictures and graphics are for visual representation only. This publication supersedes all prior technical, policy and price data.

About Conestoga Wood Specialties

Conestoga Wood Specialties: Crafting Excellence Since 1964

Since 1964, Conestoga Wood Specialties has manufactured the highest quality cabinet doors and components for the Kitchen & Bath industry. From our modest beginnings in a small Lancaster County, Pennsylvania garage, we have grown into an industry leader recognized for consistent quality, breadth of selection, on-time delivery, and superior product performance.

While our roots run deep in finely crafted wood components, we have never stopped looking ahead – continually exploring new materials, product designs, accessories, and services to help educate our customers of emerging trends. Though we are best known for our expertise in wood, Conestoga has consistently stretched beyond traditional boundaries to embrace advancements in technology and materials.

Our team frequently travels to Europe to develop and strengthen supplier relationships and discover innovative materials. We partner with global leaders in alternative materials, investing heavily in inventories to make these products available to our customers – and our pursuit of innovation continues. In addition to doors and complementary items, for more than 45 years Conestoga has manufactured a domestic line of Ready-to-Assemble (RTA) framed cabinetry, helping our customers expand their offerings. Recently, we've broadened our RTA program to include full access cabinetry in both plywood and alternative materials. These product lines allow custom cabinet shops to compete directly with imports, offering size customization, an extensive door and drawer front offering, and a wide array of finishes and accessories.

Through all the changes and challenges, we have stayed true to our roots, continuing to produce thousands of doors, drawer boxes, front frames, and components every day. As a family-owned business, we proudly serve the Custom, OEM, and RTA cabinet segments of the Kitchen & Bath market.
Now in our sixth decade, Conestoga remains dedicated to the values that elevated us to the forefront of the industry – craftsmanship, innovation, and integrity – while remaining agile and open to new ideas that help our customers succeed.

Above all, we have never forgotten that strong relationships are built one delivery at a time.

CONESTOGA™ WOOD SPECIALTIES

1 General Information

Credit Terms 1.1
State and Local Tax 1.1
Custom Product Quote Requests 1.1
Order Placement 1.1
Order Forms 1.2
Customer Purchase Orders 1.2
Order Acknowledgements 1.2
Order Changes/Cancellations 1.2
Shipping Options & Methods 1.3
Drawer Box & Cabinet Systems Orders 1.4
Handling & Packaging Upcharges 1.4
Conestoga Freight Terms 1.4
Customer Pickup 1.5
Customer Receiving Process 1.5
Damaged & Defective Product Policies 1.5
Return Merchandise Authorization (RMA) 1.5
Freight Damage Claims 1.5
Missing Product Claims 1.6
Replacement Order Process 1.6
Product Warranty Information 1.6-1.7
Finishing Warranty Information 1.7

2 Lead-Times

General Lead-Time Information 2.1
Order Timing 2.1
Expedite Programs 2.1
Lead-Time Schedule & Upcharges 2.2-2.3
Replacement/Re-Order Program Lead-Time 2.4

3 Specifications

Size Specifications 3.1
Bow, Warp & Twist Tolerances 3.1
Mullion & Frame Only Door Specifications 3.2
Effects of Moisture in Wood 3.2
Preparing Products to be Finished 3.2
Tips for Avoiding Moisture-related Problems 3.3
Expansion Due to Moisture 3.4
Specie & Grade Characteristics 3.5-3.7
Specie & Grade Availability 3.7
Alternative Material Characteristics 3.8-3.9

4 Wood Doors and Drawer Fronts

Door & Drawer Front Table of Contents 4.1-4.4
Pricing and Ordering 4.5
M&T Raised Panel Doors 4.6-4.11
M&T Plywood Panel Doors 4.12-4.13
M&T Drawer Fronts 4.14-4.17
Miter Raised Panel Doors 4.18-4.23
1" Thick Miter Plywood Slab Doors 4.24-4.25
Miter Plywood Panel Doors 4.26-4.27
Miter Drawer Fronts 4.28-4.33
Applied Moulding Doors 4.34-4.37
Applied Moulding Drawer Fronts 4.38-4.39
Applied Moulding - Plywood Slab Doors 4.40-4.41
Applied Moulding - Plywood Slab Drawer Fronts 4.42-4.43
M&T Shaker Doors 4.44-4.45
M&T Shaker Drawer Fronts 4.46-4.47
M&T Statesman Collection Doors 4.48-4.49
M&T Statesman Collection Drawer Fronts 4.50-4.51
Grooved Panel Collection Doors 4.52-4.53
Grooved Panel Collection Drawer Fronts 4.54-4.55
1" Thick Collection Doors 4.56-4.57
1" Thick Collection Drawer Fronts 4.58-4.59
3-Piece & Batten Doors 4.60-4.61
1-Piece & 3-Piece Drawer Fronts 4.62-4.63
ShadowLine Black MDF Core Doors & Drawer Fronts 4.63A-4.63B
Astoria & Savoy Edgebanded Doors & Drawer Fronts 4.64-4.65
Astoria & Savoy Sequential Grain Matching 4.66

Material Pricing Guide

Material Pricing Guide

5 MDF and Alternative Materials

Alternative Materials Introduction – Table of Contents 5.1
1-Piece MDF Doors 5.2-5.5B
1-Piece MDF Drawer Fronts 5.6-5.9
5-Piece MDF Doors – Mortise & Tenon 5.10-5.15
5-Piece MDF Drawer Fronts – Mortise & Tenon 5.16-5.19
5-Piece MDF Doors – Miter 5.20-5.23
5-Piece MDF Drawer Fronts – Miter 5.24-5.25
5-Piece MDF Doors – Applied Moulding 5.26-5.27
5-Piece MDF Drawer Fronts – Applied Moulding 5.28-5.29
Allure Decorative Laminate Veneer Doors & Drawer Fronts 5.30-5.43
Allure Decorative Laminate Veneer Accessories 5.44-5.49

Intrigue Thermally Textured Surface Doors & Drawer Fronts 5.50-5.51B
Strata Thermally Textured Surface Doors & Drawer Fronts..... 5.52-5.53B
Vogue Thermally Textured Surface Doors & Drawer Fronts 5.54-5.55B
Thermally Textured Surface Sequential Grain Matching.....5.56
Thermally Textured Surface Accessories 5.57-5.62
Synchronicity High Gloss Doors & Drawer Fronts 5.64-5.65
Synchronicity Super Matte Doors & Drawer Fronts 5.66-5.67
Synchronicity High Gloss Sequential Grain Matching 5.68
Synchronicity Accessories 5.69-5.72

6 Accent Doors and Panels

Wood & 5-Piece MDF Frame Only Doors.....6.1
Wood & 5-Piece MDF Mullion Doors.....6.2
Retainer Moulding Options, 1-Piece MDF Mullion Doors & Frame Only Doors 6.3
Mullion Doors.....6.4-6.11
Quarter Circle Mullion Recomendations 6.12-6.13
CRP-10 & TW-10 Pilaster Doors 6.14
CRP-10 & TW-10 Pilaster Posts.....6.15
Plywood Pilaster Post..... 6.15A
Reeded Panels, Flexible Reeded Tambour 6.15B
Soho Black MDF Core Shiplap Panels..... 6.15C-6.15D
Wood Accent Doors.....6.16-6.18
Wire Grille Inserts..... 6.19-6.21A
Woven Mesh Inserts 6.21B
Wire Grill and Woven Mesh Inserts Sample Boards..... 6.21C
Leather Panel Inserts 6.22
Wainscot Panels 6.23
Metal Accent Option 6.24-6.25
Drip Edge Option 6.25

7 Design Options

Edge Profiles.....7.1
Framing Beads.....7.2
Panel Raises..... 7.2A
Custom Options.....7.3-7.15

8 Finishing Program

Finishing Program Overview 8.1
Finishing Process.....8.1
Finishing Tolerances & Warranties 8.1-8.2
Wiping Stains.....8.2
Custom Wiping Stain Matching 8.2-8.3
Truetones.....8.3
Traditional and Soft Wipe Glaze Option.....8.3-8.4

Wiping Stains with Pinstriped Glazes....8.4
Primed Products....8.4-8.6
Colourtones....8.6-8.7
Prism Paints....8.7-8.8
Colourtones & Prism Paints with Hand Wiped Glazes....8.8-8.9
Colourtones & Prism Paints with Pinstriped Glazes....8.9
Antiquing....8.10
End Grain Sealant....8.10
Distressing....8.10
Cross Grain Sanding....8.10
Customer Responsibilities....8.11
Finishing Offering & Availability....8.12-8.21
Custom Finishing Pricing....8.22
Ancillary Product Finishing Pricing....8.23
Finish Sample Kits....8.24
Sample ID Label....8.25
Prism Paint Fan Deck....8.25
DuraGuard System Overview....8.26
DuraGuard Pricing....8.27
DuraGuard Finishing Instructions....8.28-8.34
DuraGuard Legal Disclaimers....8.35
Health and Safety Information....8.35
DuraGuard Care and Cleaning....8.35
Customer Supplied Parts for Finishing....8.36-8.37
Customer Wiping Stain Match....8.38

9 Mouldings

Moulding Program Overview....9.1
Solid Wood Moulding Specifications....9.1
Moulding Pricing & Availability....9.2-9.5
Crown Moulding Profile Drawings....9.6-9.8
Trim and Accent Moulding Profile Drawings....9.9-9.12
Variable Width Light Rail and Variable Width Filler Mouldings....9.12
Shiplap and 1/4" Solid Refacer's Mouldings....9.13
Non-Standard Moulding Pricing & Availability....9.14
Non-Standard Moulding Profile Drawings....9.15-9.16A
Moulding Assembly Options....9.17
Moulding Cut-Down Option....9.18
Special Order Moulding Program....9.18
Random Length Cabinet Framing....9.19

10 Interior Storage

Custom Dovetail Drawer Box Specifications 10.1
Dovetail Drawer Box Pricing & Options 10.2-10.6
Custom Drawer Accessories 10.7-10.13
Cabinet Accessories 10.14-10.47
Closet Accessories 10.48

11 Specialty Products

Custom Valances 11.1-11.2
Standard Arched Valances 11.3-11.5
Slab Fillers 11.6
Glass Shelves 11.6
Fluted Fillers & Edge Profile Options 11.7
Floating Shelves 11.8-11.13
YouK Open Shelving Units 11.14-11.19
Stemware Holders 11.20
Custom Cutting Boards 11.20
Front Frames Specifications & Pricing 11.21-11.23
Inset Door and Drawer Fronts 11.23-11.24
1/8", 1/4" and 3/4" Plywood Program 11.24-11.25
1/4" Short Grain Plywood Program 11.26
Veneers 11.27
Wood Edgeband Program 11.28
PVC Edgeband Program 11.29
3D Panels 11.30-11.31
COMPACT BLUMOTION Hinge Program 11.32
Blum Full Access Cabinetry Hinge Program 11.33-11.35
AVENTOS HK Lift System Hardware 11.36-11.37
Range Hoods 11.38-11.60

12 Legs, Corbels and Accents

Decorative Elements & Accents 12.1
Decorative Turning Program 12.2
Table Legs & Decorative Columns 12.4-12.12
Receptacle Notching & Order Form 12.14-12.15
Outlet & Switch Plate Covers 12.16-12.17
Vent Covers 12.18
Create a Column Components 12.19
Wood Feet 12.20-12.23
Wood Corbels 12.27-12.36
Wood Knee Brackets & Cleats 12.37

13 Marketing Support

Marketing Support Materials 13.1-13.4

14 Order Forms

Door/Drawer Fronts ..... Order Form #1, 1-A
Sequential Grain Matching ..... Order Form #2
Alternative Materials ..... Order Form #3
Moulding ..... Order Form #5
Drawer Box ..... Order Form #6
Specialty Drawer Box ..... Order Form #6-A
Advantage Cabinet Systems ..... Order Form #7, 7-A
Advantage Cabinet Systems Parts ..... Order Form #7-B
Vesta Cabinet Systems ..... Order Form #8, 8-A
Vesta Cabinet Systems Parts ..... Order Form #8-B
Literature Request ..... Order Form #9
Replacement Form ..... Order Form #10

Credit Terms

- Conestoga has two standard types of credit terms: 100% prepay and open credit, subject to financial creditworthiness. 100% prepay accounts require full payment for orders before work begins. Open credit term accounts (2% 10, net 30) are subject to the terms and conditions stated on Conestoga's Credit Application and will be reviewed periodically. Past-due balances are subject to a late fee of 1.5% monthly or 18% annually.
- All new customer accounts are initially set up as 100% prepay until Conestoga has approved your Credit Application. For a Credit Application, contact your Sales Representative or our Credit Department. Open credit term customers are subject to periodic review and credit limits are adjusted accordingly.
- Methods of payment include: Payment through our Customer Business Portal, Mail, or by Phone.
- Payment types accepted: check, credit card (American Express, Discover, MasterCard, and Visa), wire, and Automated Clearing House (ACH). Credit Card payments will incur a service charge to offset processing costs.

State and Local Sales Tax

- To qualify for state and local sales tax exemptions, Conestoga requires a valid state sales tax exemption certificate. Without a certificate on file, we are obligated to apply applicable state and local taxes to all purchases. Note that a state sales tax license or seller's permit is not sufficient to exempt purchases.
- For purchases shipped to other states, applicable sales tax may be charged based on the destination state, as laws vary.
- If taxes are applied and a tax exemption certificate is submitted at a later date, Conestoga can only issue credit for taxes charged within 60 days prior to receiving the certificate.
- For questions about sales tax exemption, please contact our Credit Department at 1-800-863-9561 or credit@conestogawood.com.

Custom Product Quote Requests

- Immediate product quotations can be generated via Con-Nex®; contact Customer Service for details, 1-800-838-5850 option 2.
- All product quotation requests must be submitted in writing. Always clearly write or type "**QUOTE**" in the header of the form or select the QUOTE box at the top of the form.
- Quotes will be processed within a timely manner of receipt and will be acknowledged by your preferred communication method.
- Log in to the Customer Business Portal (CBP), my.conestogawood.com, to convert your quote to a live order or sign the last page of your acknowledgement and return it to Conestoga.

Order Placement

- Contact Customer Service if assistance is required with Quotes and/or Orders.
- Conestoga offers four methods of order placement: Conestoga Con-Nex®, email, fax and mail. Fax, phone and email information to contact Customer Service is listed on the first page of this manual.
- Our Con-Nex quoting and ordering program is a 24/7 order processing software package that provides an easy way to obtain instant quotes and electronically place orders. For more information on Con-Nex contact our Help Desk: 1-800-838-5850, option 2.
- Inbound fax lines are available 24 hours a day, seven days a week.
- Phone lines are open during office hours – 8:00 a.m. to 5:00 p.m. (EST), Monday through Friday.
- When sending orders via U.S. Mail, use the address below. The address **must** include "Attention: Customer Service", followed by the word "**ORDER**".

  Conestoga Wood Specialties Corporation
  ATTN: Customer Service – **ORDER**
  245 Reading Road, PO Box 158
  East Earl, PA 17519-0158

Order Forms

- All orders must be submitted written or typed on a Conestoga Order Form or a pre-approved customer Purchase Order Form. Verbal orders will not be accepted.
- Complete all header information. If you use your company-specific order forms, include all required fields. Customer Service is available to assist you in developing your forms.
- When adding, correcting, or otherwise modifying information on an order that has previously been submitted, all changes must be submitted in writing.
- All orders must be submitted in finished dimensions.
- Master copies of each Order Form can be downloaded from the Customer Business Portal or Section 14 of the Custom Product Manual. Refer to the back page of Conestoga Order Forms for ordering instructions. If you have questions regarding Order Forms or the product catalog, contact Customer Service.
- Use Conestoga terminology when placing orders.
- Incomplete Order Forms will delay order processing.

Customer Purchase Orders

- Our system allows the same purchase order number or name to be used multiple times. To avoid duplicate orders, please assign a unique purchase order number or name to each order submitted.
- Customers are responsible for any duplicate orders submitted.
- If you are uncertain whether your order has been received, verify it through the CBP or by contacting Customer Service.

Order Acknowledgements

- Conestoga provides order acknowledgements via email, fax, or viewed on the CBP.
- Order status can be checked on the CBP.
- Acknowledgements confirm that the order entered in our system matches your provided details. Please review promptly for accuracy.
- If you identify any errors, contact Customer Service immediately.
- To update your preferred method for receiving acknowledgments, log onto the CBP and adjust your preferences in the "My Account" section.

Order Changes/Cancellations

- Change and cancellation requests can be submitted through the CBP or in writing. Use the Conestoga acknowledgement for written requests and mark "Change Order" at the top. Include the original purchase order and specify the item(s) to be modified or canceled.
- Orders that have been entered into our computer system but not released into production can be modified or canceled with no upcharge.
- **Order change fees will be applied to the original purchase order for any modifications to orders that have been released into production.** Order change fees vary and are determined by the manufacturing completion percentage.
- Change or cancellation requests may be denied altogether if the product has progressed beyond a critical manufacturing point and order lead-times may be affected.
- Some products or order types cannot be modified or cancelled.

Shipping Options and Methods

- Conestoga offers a wide variety of shipping methods, including our company-owned fleet trucks, common carriers and UPS Ground or FedEx Ground.
- Conestoga operates several daily and weekly route trucks to many parts of the Northeast, Southeast and Midwest. These route trucks are designed to deliver customer orders economically, reliably and damage free. This service provides a dependable daily or weekly arrival time at the customer's site. If you are interested in using the Conestoga route truck service, please contact your Sales Representative for more information. This service is available on a limited basis. Several guidelines and restrictions apply.

  Restrictions include:

  - Delivery Routes – Conestoga has several established delivery routes to service areas that support high amounts of freight deliveries. Areas outside these established delivery networks may not contain the necessary volume needed for cost effective delivery service. Customers located outside established delivery routes will be serviced by select common carriers.
  - Purchase Quantities – we make every attempt to service high volume customers on Conestoga trucks. Customers located in close proximity to larger customers that order on a frequent basis may be eligible for Conestoga truck deliveries. Customers ordering on an infrequent basis or not near established delivery routes will be serviced by select common carriers.
  - Delivery Frequency – Conestoga route trucks generally travel once per week to regions outside our local delivery areas unless the overall territory volume justifies multiple deliveries. Conestoga truck deliveries can be supplemented by common carrier if desired. However, common carrier deliveries will likely cost more than Conestoga deliveries.
  - Receiving Deliveries – depending on the areas serviced, Conestoga will utilize either straight trucks with lift gates or tractor trailers. If located on a delivery route using tractor trailers, customer's facilities must have a loading dock and lift equipment to handle pallets.
  - Residential/City Deliveries – some customers in residential and city locations may have insufficient space for tractor trailers to safely maneuver. Even if volume and location warrants Conestoga truck delivery, there may be facilities we cannot deliver to based on insufficient delivery space.
- Common carriers are used to ship larger orders outside of our delivery routes, to lower volume customers or to regions more difficult to access. Conestoga has negotiated discounted rates with several carriers and will choose the most economical and timely carrier for your area.
- Customers' facilities must be able to accommodate LTL shipments. A truck dock and skid-handling equipment are required in order to receive these shipments.
- FedEx Ground and UPS Ground are the primary shipping methods used to ship smaller orders and groups of orders totaling less than five packages.
- Expedited services are available via UPS Ground and FedEx Ground for products whose weight and size qualify. Any special air freight premiums are the responsibility of the customer. Contact Customer Service with questions regarding your options when using these premium shipping services.
- Because all finishing materials are flammable, they are classified as Hazardous Materials by the shipping industry. Although limited quantities of finishing materials can be shipped by air, shipping charges are extremely expensive. Finishing materials shipped by common carrier require special handling designated by the shipping industry. Additional Hazmat charges will be assessed and are the responsibility of the customer, and will be added to your freight costs.
- Conestoga offers a packaging process called Zero Pack. This method utilizes far less corrugated material and significantly reduces the amount of time and labor required to receive and unpack product. The Zero Pack process will be utilized at Conestoga's discretion for shipments of 30 pieces or more. Shipments of 29 pieces or less will continue to use the box packaging method.
- Many common carriers have implemented a surcharge for large packages including those over 96" in length. Conestoga will select the most economical shipping method to minimize this surcharge. Conestoga will not charge the surcharge for packages delivered on our company-owned fleet trucks.
- Orders placed separately are not guaranteed to ship together, even if a requested ship date is supplied by customer.

Drawer Box and Cabinet Systems Orders

- If you are located in the following states: AL, FL, GA, MS, NC, SC or TN your order will ship from our Kenly, NC facility, all others will ship from our East Earl, PA location.
- Expedites will ship direct from our Kenly, NC facility. These costs are the responsibility of the customer.

Handling & Packaging Upcharges

- Small order quantity charge:
  A net charge will be included for small quantity orders containing 1 to 3 pieces. This charge is necessary to offset costs associated with processing, handling and packaging small quantity orders and will be assessed on all custom product orders, including expedites. Cabinet Systems orders and Cabinet Systems parts orders are exempt from this fee.
- Oversize packaging charge:
  Oversized products will be packaged using honeycomb cardboard to protect against shipping damage. A product will be considered oversized if it meets one of the following criteria:
  - Dimensions exceed 36" in width and 36" in length.
  - Dimensions exceed 84" in width or 84" in length.

  Each oversized product will incur a net charge for packaging. Customers requesting oversize packaging will also receive the per piece net charge. Mouldings and Cabinet Systems parts will not be included in the oversize packaging program and are exempt from this fee.

- Crate Pack Option
  - Robust packaging option used to mitigate potential damage arising from shipping.
  - Available for doors and drawer fronts only, this option must be requested by the customer.
  - Available on 63" x 45" pallet only. Doors and drawer fronts up to 60" in one dimension cannot exceed 42" in the other dimension.
  - Net charge per pallet.
    - 30 to 250 pieces will incur one pallet charge.
    - 251 to 500 pieces will incur two pallet charges.
    - 501 to 750 pieces will incur three pallet charges.
    - 751 to 1,000 pieces will incur four pallet charges.



Conestoga Freight Terms

- Open Credit Terms
  - Customers with open credit terms will be shipped prepaid via common carriers. A “freight only” invoice will be generated by Conestoga per delivery.
  - All orders that ship via Conestoga route truck service will be consolidated and one “freight only” invoice will be generated per delivery. Rates vary by zone and weight.
  - FedEx Ground and UPS Ground will be shipped prepaid and the charges will be added to each invoice.
- 100% Pre-pay
  - Customers will be charged for shipping at the time the order is placed.
  - Conestoga will estimate the weight of the order and utilize a zone freight matrix to determine freight charges.

Customer Pick Up

- A 2.5% handling fee is added to all customer pick up orders due to staging, storage and double handling of the product. All customer pick ups must be scheduled through Customer Service at least four business hours prior to the desired pick up time. Customers picking up their own orders are asked to do so within three days of the acknowledged ship date.
  - **Customers are required to schedule a pick up time with Customer Service. Warehouse hours of operation are 7:00 a.m. - 11:30 a.m. (EST), Monday through Friday.**

Customer Receiving Process

- For Conestoga route truck deliveries, Conestoga drivers will assist you in verifying that you have received all products listed on a skid report. The skid report documents each skid number and the number of packages on each skid. Any oversized or loose packages will also appear on the skid report. Your receiver will be asked to sign the skid ticket and Bill of Lading as verification that delivery of all packages listed has occurred.

Damaged and Defective Product Policies

- Notify Customer Service within 15 business days after receipt of shipment if you receive products that are damaged, defective or in error. Submitted claims must include the following information:
  - Original order and invoice numbers.
  - A list of the defects or errors in the product(s).
- Returns of non-defective merchandise will not be accepted.
- Conestoga will ship replacements or missing items as soon as possible after a claim is reported. Replacement product(s) will be invoiced at the original product cost. A credit will be issued against the original Purchase Order once the claim has been investigated and the product has been deemed defective. In some instances, Conestoga may require that the defective product be returned for inspection prior to a credit being issued, but this will not impact the lead-time of the replacement item.
- A copy of our Return Merchandise Authorization Form, supplied by Customer Service, must accompany all returned merchandise.

Return Merchandise Authorization (RMA)

- Because our products are custom manufactured from natural materials, we will occasionally ask to have incorrect products returned for quality inspection. This inspection process is necessary to identify how the issue occurred and to improve our overall quality and delivery performance.
- Customer Service will issue a Return Merchandise Authorization (RMA) form to you via e-mail, automated fax acknowledgement or mail. This RMA form will list the products that you have identified as defective. **Please mark your return cartons and boxes with the RMA number listed on this form.**
- All returned merchandise must be shipped with secure, protective packaging materials.

Freight Damage Claims

- **If a Common Carrier or freight shipment contains a damaged package or skid, the freight bill must be marked "DAMAGED". Both the receiving customer and delivery person must sign the freight document. If the freight bill contains no notation of damage, or is lacking the appropriate signatures, the freight carrier will deny the claim. Pictures of both the damaged box or pallet and the damaged product inside are necessary to file a claim with a carrier.**
- Conestoga will process all claims for damaged products shipped on Conestoga's trucks and our preferred common carriers (Ward, FedEx Freight, AAA Cooper and Averitt Express).
- Common carrier claims must be filled out by Conestoga with the appropriate freight carrier. Conestoga will replace damaged items with no expedite upcharges.
- FedEx and UPS Ground damage claims must be filed by Conestoga and will be paid to Conestoga. Valid claims will be credited to the customer. All packaging materials and damaged product must be retained by the customer for inspection or collection by the carrier.
- Damaged product must be reported within 15 business days after receipt of product. Claims for damaged product after 15 days may be denied.

Missing Product Claims

- For missing product claims, Conestoga will initiate an investigation of the original shipment. The research will include our picking documents, skid listing and Bill of Lading. These documents will verify if the proper number of products were loaded on the delivery truck. The Bill of Lading will show proof of delivery or notations of any delivery or receipt issues.
- Based on the results of the investigation, Conestoga will either issue a credit to your account or notify you that your claim has been denied.
- Conestoga requests that customers verify the package count within 5 business days, and the total number of items and product sizes within 15 business days. Claims filed for missing products after 15 business days may be denied.
- If any portion of a shipment is lost, 7 business days must be given to locate it.

Replacement Order Process

- A Replacement Order Form can be downloaded from the Supporting Product Information of the CBP or supplied by Customer Service.
- Replacement orders will be processed as quickly as possible. See the Replacement Expedite Program Chart in the Offerings Section of this manual for details.
- All replacement orders will be processed according to the customer's normal payment terms.
- A credit will be issued against the replacement order for all replacement items.

Product Warranty Information

- Conestoga Wood Specialties Corporation warrants that, for a period of one year from date of shipment, our products will be reasonably free of defects in materials and workmanship. When properly handled, our products will conform, within acceptable tolerances, to applicable manufacturing specifications. This limited warranty applies only to Conestoga products which are stored, handled and installed properly. Conestoga will not be responsible or liable for any indirect, consequential or incidental damages or costs sustained by the user.
- Conestoga's warranty is limited solely to the value of the original materials purchased from Conestoga and is further limited in amount to the purchase price paid for such materials. Conestoga will not be liable for the cost of extraneous materials, labor, travel costs, installation expenses or other related expenditures.
- Conestoga will not be liable for damages to products caused by improper handling, storage, assembling, finishing or installation by the customer. Our products are not warranted against expansion occurring as a result of high moisture or humidity conditions.
- Natural characteristics in the wood (burls, grain patterns, pin knots, mineral deposits, sapwood, etc.) that fall within Conestoga's specifications will not be considered defects.
- Most wood species, particularly Cherry, will darken naturally with age. Conestoga is not liable for the change in appearance of any product, finished or unfinished, due to this aging process. Results of aging will be more obvious when using light colored or natural finishes.
- Mitered doors allow a .010" joint gap on the interior corners of the door for up to 1/3 of framing to allow for the expansion/contraction due to seasonal changes.
- Mitered doors are not warranted against joint separations that occur as a result of high humidity or moisture conditions.
- Veneered panel doors are not guaranteed to match solid wood framing on the same door in either the raw or finished state.
- Solid wood moulding color may differ from doors of the same specie.
- Because the individual staves of the panel continue to contract and expand, lines may appear on solid wood panels and offsets may develop from one stave to another. These stave lines will not be considered defective. **To eliminate the chance of stave offsets, utilize the MDF panel option when using painted finishes.**
- Vertical grain panels that exceed 22" wide by 43-15/16" high or horizontal grain panels that exceed 43-15/16" wide by 22" high in either single or multi-panel products are not warranted against expansion, warpage, cracking or open framing joints.
- Conestoga will warrant 1-piece products against expansion, warpage or cracking if they are within the following parameters:

Product Warranty Information (continued)

- Product up to 12" wide and 21-15/16" high will be warranted if the expansion or warpage is greater than 1/8".
- Products measuring between 12-1/16" to 22" in width, or 22" to 43-15/16" in height will be warranted if the expansion or warpage is greater than 1/4".
- Any 1-piece product exceeding 22" in width or 43-15/16" in height will not be warranted.

- All solid wood 3-piece drawer fronts over 44" wide or 14" high are not warranted against expansion, warpage, cracking of panels or cracked joints.
- Conestoga expressly disclaims any and all other warranties, whether expressed or implied, including all warranties of merchantability and warranties of fitness for a particular purpose with respect to its products.
- Allowable tolerances of bow, warp or twist for single panel, multi-panel, frame only and mullion doors are as follows:
  - Single panel up to 26" wide and 48" high = 1/8".
  - Multi-panel up to 26" wide and 48-1/16" to 64-15/16" high = 1/4".
  - Multi-panel up to 26" wide and 65" to 83-15/16" high = 5/16".
  - Single panel, single opening frame only and mullion doors over 26" wide and 48" high will not be warranted (mullion lites not included in opening count).
  - Any door exceeding 26" wide or 83-15/16" high will not be warranted.

Finishing Warranty Information

- Conestoga's finishes carry a one-year limited warranty against peeling, blistering or cracking, but no warranty against discoloration. Conestoga assumes no responsibility for damages or poor color match when finish is applied by the customer.
- Most wood species will naturally darken or yellow with age. Conestoga will not be held liable for the change in appearance of any product, finished or unfinished, due to this aging process.
- Conestoga recommends that a finished sample door be ordered prior to ordering any finished job. We do not suggest ordering large or complex finished product based on small sample swatches.
- Conestoga has established an acceptable range of color for finished products. Orders placed over an extended period of time may vary in color due to the natural aging of the finished substrate and slight variations from batch to batch in finish materials. These variations will not be considered defective and will not be warranted by Conestoga.
- Conestoga's finish materials are interior grade only and not intended for exterior use. Exposure to outdoor conditions will cause failure and will not be warranted.
- Due to the many variables involved in any finishing process, Conestoga assumes no responsibility if products stained by the customer using the DuraGuard system do not produce an exact match to prefinished products purchased from Conestoga.
- Painted or opaque finishes are not recommended on mitered designs. To reduce the chance of joint separation, Conestoga recommends using an MDF panel option.
- Veneers will absorb stain differently than solid wood. The mismatch of solid wood and veneers is not considered defective.

General Lead-Time Information

- Lead-time scheduling may be delayed if order placement questions are encountered. Orders with questions will not be scheduled for production until all questions have been answered by the customer.
- Lead-times are based on normal business days, which excludes weekends, company holidays and non-workdays due to acts of nature. Lead-times do not include transportation time.
- Published lead-times provide an estimated range and will vary according to incoming order volume, material availability, capacity restraints, labor requirements and other factors.
- Following the order entry process, each order is scheduled and committed to a production schedule. This process is completed at the end of each day; assuming no questions are encountered, a ship date is assigned to the order. The ship date appears on the order acknowledgement and can be viewed on the CBP.
- Orders containing products with different lead-times are given the ship date of the product with the longest lead-time. Customers wishing to split their orders and receive products when ready must note this on their order.
- Published lead-time ranges do not include time needed for extra options. Option lead-times add-ons can be found in the Design Options Section of this manual.
- When using the Conestoga route truck delivery service, lead-times will vary according to your truck's delivery schedules. Consult Customer Service with route truck questions and schedules.
- Large quantities, complex orders and products processed through our Special Designs Department may experience extended lead-times.

Order Timing

- All standard orders processed with open terms and received by 9:00 a.m.(EST) on a business day will have the lead-time begin that day. Orders received after 9:00 a.m.(EST) will have the lead-time begin the following day.
- 100% prepay orders will begin the manufacturing process one business day after receipt of payment. Lead-time calculations begin upon the receipt of payment, **not receipt of order**. Orders prepaid using credit cards (American Express, Discover, MasterCard or Visa) wire and Automated Clearing House (ACH) obtain faster approval.

Expedite Programs

- Conestoga's expedite program is designed to aid our customers in **emergency** situations where product is needed to complete a job. The expedite program lead-time is based on available capacity.
- See charts on pages 2.2 and 2.3 for lead-time ranges, piece limits and upcharge percentages. Some outsourced products may not be eligible to be expedited; contact Customer Service for availability.
- Expedite charges are based on the net amount of all products ordered before shipping, special handling and taxes are applied. Expedite charges are shown as a line item at the bottom of both the acknowledgement and invoice.
- Code Green expedites can only be used with Cabinet Systems orders. These expedites ship in 4-5 days, with a 35% upcharge. There is a six piece limit on Cabinet Systems Code Green expedite orders.
- The lead-time for a custom door ordered with Cabinet Systems products will be based on the door design.
- Expedite orders received prior to 11:00 a.m.(EST) will be eligible to go into production the same day. **Any expedite order received after 11:00 a.m. (EST) will be eligible to go into production the following day.**

Lead-Time Schedule and Upcharges

Conestoga's lead-times are based on the type and complexity of the product. See previous pages for details on lead-times and expedite programs. All lead-times are subject to change due to incoming volumes and seasonal fluctuations. Options may add additional lead-time.

Lead-Times and Expedites							
	Standard	Code Red			Code Blue		
Doors & Drawer Fronts	Days	Days	Upcharge	Piece Limit	Days	Upcharge	Piece Limit
Solid Panel, Plywood Panel, Hybrid & MDF – 3/4" & 1" Thicknesses • All Mortise & Tenon Raised & Plywood Panel Designs • All Miter Raised & Plywood Panel Designs • All Applied Mouldings Raised & Plywood Panel Designs • All Grooved Panel Raised & Plywood Panel Designs • All Slab, Slab Batten, Edgebanded Plywood & 3-Piece Designs • All Wainscot Products*	10-15	2-5	50%	6	5-8	35%	30
Finishing							
Wiping stains, Wiping stains w/glazes, Truetone stains & Colourtones	STD + 5-7	4-5	50%	6	9-10	35%	30
Prism Paints - Deeptones & Pastels, Prism Paints w/glazes	STD + 6-8	NA	NA	NA	NA	NA	NA
Prism Paints - Bold	STD + 8-10	NA	NA	NA	NA	NA	NA
Colourtones with glazes	STD + 6-8	4-5	50%	6	9-10	35%	30
Primed products (MDF & wood)	STD + 5-7	3-4	50%	6	8-9	35%	30
Finish Sample Kits	3	2	20%	6	NA	NA	NA
DuraGuard products (less than 5 gallons)	3-4	2	50%	5 Gal.	NA	NA	NA
DuraGuard products (5-15 gallons)	5-6	NA	NA	NA	NA	NA	NA
DuraGuard products (15+ gallons)**	8	NA	NA	NA	NA	NA	NA
DuraGuard – Prism Paints	8-9	NA	NA	NA	NA	NA	NA
Touch Up Kits – Wiping Stains, Truetones, Glazes, Aerosols and Colourtones	3	2	20%	NA	NA	NA	NA
Touch Up Kits – Prism Paints and Custom Stains	8-9	NA	NA	NA	NA	NA	NA
Mouldings							
8' Stock profiles	3-5	2	20%	4	NA	NA	NA
8' & 12' Standard & non-standard profiles	10-12	NA	NA	NA	NA	NA	NA
Random length cabinet framing	10-12	NA	NA	NA	NA	NA	NA
Interior Storage							
Drawer boxes (finished)	7-10	4-5	50%	6	6-7	35%	30
Drawer boxes (unfinished & unfinished dovetails)	5-7	3-4	50%	6	3-4	35%	30
Trash can pull-out, cutlery dividers, knife block, spice tray insert, spice storage, can storage	8-10	4-5	50%	6	4-5	35%	30
Wood lazy susans, adjustable pull-out tray and systems kit	3-5	2	50%	6	NA	NA	NA
Lattice wine racks	10-15	NA	NA	NA	NA	NA	NA

*Wainscot products: any door or panel exceeding 36" wide and 36" high, 84" high or wide, or with any framing piece 6" and wider.

** DuraGuard orders totaling more than 15 gallons of the same finish have a standard lead-time of 8 days.

Lead-Time Schedule and Upcharges (continued)

Lead-Times and Expedites							
	Standard	Code Red			Code Blue		
Range Hoods	**Days**	**Days**	**Upcharge**	**Piece Limit**	**Days**	**Upcharge**	**Piece Limit**
Stanisci VCHIM (SV, AV & VRS)	5-10	NA	NA	NA	NA	NA	NA
Stanisci – All except VCHIM (SV, AV & VRS)	10-15	NA	NA	NA	NA	NA	NA
Omega range hoods – All designs	15	NA	NA	NA	NA	NA	NA
Specialty Products							
Veneers (non-stocked)	14-16	NA	NA	NA	NA	NA	NA
Plywood (full sheet)	4-5	2-3	20%	4	NA	NA	NA
1/8", 1/4" and 3/4" plywood cut-to-size	6-8	2-3	50%	6	3-4	35%	30
Front frames	10-15	2-5	50%	6	5-6	35%	30
Posts, legs, wood ornaments & all accent pieces*	10-12	NA	NA	NA	NA	NA	NA
Floating Shelves	10-15	NA	NA	NA	7-8	35%	NA
Wood knee brackets & cleats	10-15	2-3	50%	6	NA	NA	NA
Art for Everyday accessories (Alder, Cherry, Maple)							
Linea, New Art, Traditional	10-12	NA	NA	NA	NA	NA	NA
Acanthus, Modern Classic, New York, Multiplicity	12-14	NA	NA	NA	NA	NA	NA
Sculptural mouldings, legs, posts, panels	20-22	NA	NA	NA	NA	NA	NA
Alternative Materials							
DLV – Allure doors**, drawer fronts**, full sheets, cut-to-size panels and fillers	7-10	3-4	50%	6	5-6	35%	30
DLV – Allure mouldings, full edgeband rolls, partial edgeband rolls, touch up kits and veneers	3-4	2-3	50%	6	NA	NA	NA
High Gloss – Synchronicity doors, drawer fronts, full sheets and cut-to-size panels	7-10	3-4	50%	6	5-6	35%	30
High Gloss – Synchronicity full edgeband rolls, partial edgeband rolls, heat shield and peel coat eraser	3-4	2-3	50%	6	NA	NA	NA
Super Matte – Synchronicity doors, drawer fronts, full sheets, cut-to-size panels, narrow overlay filler and L-Moulding	7-10	3-4	50%	6	5-6	35%	30
Super Matte – Synchronicity full edgeband rolls, partial edgeband rolls and veneers	3-4	2-3	50%	6	NA	NA	NA
TTS – Intrigue, Strata and Vogue doors, drawer fronts, full sheets, cut-to-size panels, mouldings and 38mm slabs	7-10	3-4	50%	6	5-6	35%	30
TTS – Intrigue, Strata and Vogue full edgeband rolls, partial edgeband rolls, touch up kits and veneers	3-4	2-3	50%	6	NA	NA	NA
Marketing Support Materials							
All manuals, brochures & sell sheets	3	NA	NA	NA	NA	NA	NA

*Some specific wood ornaments are availiable for expedite. See Section 12 for more information.

** Cabo 225 doors and drawer fronts not available as expedites.

Replacement/Re-Order Program Lead-Time

- Products incorrectly produced by Conestoga will be replaced with no expedite upcharges.
- Customer re-orders must contain products that were previously ordered. All re-order requests must be submitted in writing and include the original Sales Order and Line numbers that are being re-ordered.
  - Individual products, up to 6 pieces, damaged or incorrectly ordered by the customer will be re-ordered as a Code Red expedite with no upcharge.
  - Entire orders, up to 30 pieces, damaged or incorrectly ordered by the customer will be re-ordered as a Code Blue expedite in approximately half the standard lead-time with no upcharge.
  - Cabinet Systems products damaged or incorrectly ordered by the customer will be re-ordered as a Code Green expedite with no upcharge.

Re-Order Expedite Program (customer issues)				
Products	**Expedite Code**	**Upcharge Rate**	**Restrictions**	**Lead-times**
Custom	Red	No Upcharge	6 piece limit	See Lead-times Chart
Custom	Blue	No Upcharge	30 piece limit	See Lead-times Chart
Cabinet Systems	Green	No Upcharge	6 piece limit	See Lead-times Chart in the Cabinet Systems Manual

Size Specifications

- A minimum size dimension is listed for each door and drawer front. When ordering, one of the minimums must be exceeded by at least 3". For example, if a door minimum is listed at 10" x 10", the door must be ordered as either 10" x 13" or 13" x 10". A door ordered under the minimum listed will incur an list charge. Our minimums are designed to protect our employees by making sure there is always enough material to run through a given piece of equipment.
- If a door is ordered under the stated minimum, a cut-down charge will be incurred. Up to 1" of material may be trimmed from each stile and 3/4" trimmed from each rail, depending on design. Miter doors will not be cut-down.
- Conestoga measures all door framing by its widest dimension. When specifying wider framing, be sure to provide full framing width calculations including edge profile and framing bead.
- When calculating material costs, there is a one square foot minimum on doors only. No minimum on drawer fronts.
- Designs ordered over 26" wide or 48" high will be made with two panels unless specified otherwise by the customer, with the exception of miter designs, 10SQ1 and 10SQ2 MDF doors. One panel will be added for every 26" wide or 48" high. For example, a door measuring 27" x 49" will receive four panels.
- Conestoga will not warranty oversized single panel doors against warpage, cracking and failed corner joints that will develop.
- Unless otherwise specified by the customer, lower panels on multiple panel doors will be made with a square panel regardless of the design ordered. Exceptions include doors with matching top and bottom rails, such as a CRP-2020.
- The maximum height for a solid wood, single panel product is 113" for all species except Bamboo which is 95-3/4".
- The maximum height for a plywood single panel product is 95-1/2" for all species.
- Conestoga manufactures its products to the nearest 1/16" or 1.6mm. A tolerance of +/-1/32" or +/-0.8mm is considered acceptable.

Bow, Warp and Twist Tolerances

- Allowable tolerances of bow, warp or twist for single panel, multi-panel, frame only and mullion doors are as follows:
  - Single panel up to 26" wide and 48" high = 1/8".
  - Multi-panel up to 26" wide and 48-1/16" to 64-15/16" high = 1/4".
  - Multi-panel up to 26" wide and 65" to 83-15/16" high = 5/16".
  - Single panel, single opening frame only and mullion doors over 26" wide and 48" high will not be warranted (mullion lites not to be included in opening count).
  - Any door exceeding 26" wide or 83-15/16" high will not be warranted.
- Allowable tolerances for contraction, expansion, bowing, warping and twisting for 1-piece products are as follows:
  - Up to 12" wide and 21-15/16" high = 1/8".
  - 12-1/16" to 22" wide or 22" to 43-15/16" high = 1/4".
  - Any one-piece product exceeding 22" wide or 43-15/16" high will not be warranted.
- Allowable tolerances for contraction, expansion, bowing, warping and twisting for 3-piece products are as follows:
  - Up to 44" wide and 14" high = 1/4".
  - Any 3-piece solid product exceeding 44" wide or 14" high will not be warranted.

Mullion and Frame Only Door Specifications

- Frame only doors are constructed as single opening regardless of size. If a mid-rail is desired it must be requested, upcharge applies.
- When ordering any mullion door design, always specify the number of lites desired.
- All custom mullion doors are constructed using wooden splines at each mullion joint.

Effects of Moisture in Wood

- Any solid wood product will expand or contract over time as moisture and climate conditions change. Wood products need stable moisture conditions in order for the joints to remain tight. Refer to the “Expansion Due to Moisture” Chart in this section.
- Effects of moisture (addition to/loss of) may include panel expansion, panel contraction, joint expansion or opening (especially on miter doors), stile bowing, stile/rail expansion and stave to stave lines becoming visible in panels. Contraction of finished panels may also produce an effect called “white line”, in which a narrow strip of unfinished wood becomes visible at the point where the panel inserts into the framing. For details on what is considered acceptable, see “Tips for Avoiding Moisture Related Problems” in this section.
- Wood products located in humid climates are especially susceptible to expansion due to moisture. Conestoga will not warrant product failure caused by excessively humid conditions, including waterfront properties and coastal regions.
- Indoor pools or marine applications such as nautical vessels are considered to be in high humidity conditions regardless of any residential climate control system.
- Wood products located in dry climates are especially susceptible to contraction due to lack of moisture in the air. Conestoga will not warrant product failure caused by excessively dry conditions, such as desert and mountain locations.
- Cabinetry installed in new construction prior to climate control being activated will result in absorption of moisture from other building materials. These materials can include paints, drywall compound, concrete, stucco and wood framing material with high moisture content. Each of these construction materials releases high amounts of moisture into the home during the drying/curing process.
- Wood products installed in non-air conditioned homes, regardless of location, are very susceptible to expansion due to moisture and will not be warranted. All wood products, especially miter doors, need stable moisture conditions in order for the joints to remain tight. Refer to the Expansion Due to Moisture Chart in this section.
- To minimize moisture expansion of wood products, secondary and vacation homes should maintain some form of climate control, even in off season. Conestoga will not warranty products installed in uncontrolled environments.

Preparing Products to be Finished

- As a standard part of our manufacturing process, all non-contoured products are sanded on the face and back, typically using a wide belt sander, finishing with 220 grit prior to packaging and shipping the unfinished products. While this process ensures products that ship from Conestoga are free of surface flaws, upon receipt of the shipment, products can show signs of rub marks, scuffing and minor scratching that can sometimes occur during the shipping process.
- Please note that even when selecting the Cross Grain Removal option, products will not be ready to go directly into the finishing process. To properly prepare for finishing, it is imperative that all products be lightly sanded using automated sanding equipment or palm sanders to remove minor rub and scuff marks, as well as scratches or drag marks. Use 180 grit sandpaper during the final step in the prep-sanding process to ensure the surface of the raw wood is smooth, yet allows the finish to penetrate the wood’s surface.
- Conestoga will not authorize credit requests or process no-charge replacement orders if the customer has failed to properly prepare the product prior to finishing.

Tips for Avoiding Moisture-related Problems

- Many of Conestoga's products possess miter joint applications beyond the listed miter door offering. Examples include Presidential doors and applied moulding doors. Consult your Sales Representative or Customer Service before purchasing any of these products for use in high humidity environments.
- Door expansion experienced prior to installation on the cabinet box will usually recede once the kitchen has been installed in an air conditioned environment. For this reason, we do not recommend trimming or "shaving" the edges of the doors, because once they return to original sizing, the doors will be too narrow. Conestoga will not warrant doors that have been trimmed by the customer.
- Unfinished doors exposed to humid conditions will absorb moisture rapidly and expand. Finished products will also absorb moisture and expand, but at a slower rate. Be aware of these conditions when storing, installing or finishing products.
- Always go to extra lengths to ensure that all wood products are being stored in the proper environment. Conestoga will assume no responsibility for improper storage, handling, packaging, finishing or installation of its products in high moisture/humidity conditions.
- Doors that have been exposed to high moisture conditions and then finished by the customer have an increased chance of white line or halo developing around the panels after the doors have contracted to their original size. We recommend doors be finished in their non-expanded state as soon after delivery as possible.
- Conestoga doors are engineered with a back bevel on all our framing beads. This back bevel allows stains to penetrate the panel raise/framing bead area, helping to reduce the possibility of white line.
- Because the individual staves of the panel continue to contract and expand, lines may appear on solid wood panels and offsets may develop from one stave to another. These stave lines will not be considered defective. **Utilize Conestoga's hybrid doors or 5-piece MDF products to eliminate stave offset.**
- Conestoga's miter doors feature one of the most durable joint construction methods available. However, panel expansion in high humidity climates will put pressure on any joint, regardless of construction. Therefore, we strongly urge the use of plywood or MDF panel doors to help reduce panel expansion if the kitchen will be in either a high humidity or non-climate controlled location. Please note that even a plywood panel will not inhibit wood movement of the door framing.
- The wider the framing, the greater the chance that the miter joint will open.
- Inset doors are prone to binding inside the cabinet frame as moisture in the environment increases.
- Allow room for expansion when boring for hinges. Hinges must be placed at least 3/4" away from the framing bead. Conestoga will not be liable for improperly bored products.
- Joint failure will result if panels are glued, pinned, stapled or secured to the framing on any wood door. Conestoga will not be held liable in these instances.

Expansion Due to Moisture

How moisture levels effect movement in wood

Wood is a hygroscopic material, meaning that it will absorb and release moisture until it is in equilibrium with the moisture in the air. This is true of all wood, whether it is raw or finished. Finishing will tend to slow down this process, but will not eliminate it. When wood is exposed to a constant humidity, it will achieve a constant moisture content (MC). Wood will increase in width and thickness as it increases in MC, and will decrease in width and thickness as it decreases in MC. Conestoga manufactures its products to an MC of approximately 7%, a level typical in climate-controlled homes.

The graph below indicates how much a 10" wide panel of various species can expand as a result of an increase in moisture content at 10% and 13%. For instance, the chart reveals that a Red Oak panel 10" wide could expand by more than 7/32".

Wood expansion caused by an increase in moisture content

10" wide sample of wood	7%	10%	13%
Bamboo	10.00"	10.06"	10.11"
White Pine	10.00"	10.06"	10.13"
Mahogany	10.00"	10.07"	10.14"
Alder/Cherry/Soft Maple	10.00"	10.08"	10.15"
Walnut	10.00"	10.08"	10.16"
White Birch/Red Birch	10.00"	10.09"	10.18"
Hard Maple	10.00"	10.11"	10.21"
White Oak	10.00"	10.11"	10.22"
Red Oak	10.00"	10.11"	10.22"
Hickory	10.00"	10.12"	10.25"

The chart below shows how the moisture content of wood increases with an increase in relative humidity.
Example: At 70˚F, relative humidity in the room is 23%. This means the wood will stabilize at 5% moisture content.

Moisture Content/Relative Humidity in Wood

Moisture Content	Relative Humidity at 70˚
5%	23%
6%	30%
7%	36%
8%	43%
9%	50%
10%	55%
12%	66%
14%	75%
16%	80%
28%	99.9%

Specie and Grade Characteristics

Why Have Different Grades?

Conestoga has developed different grades of material to utilize our natural resources to the fullest. These distinct material grades have been established, allowing you to choose the best alternative for a particular job or finish.

Premium

Conestoga's Premium grade has been developed for those jobs where a more uniform look is needed. This grade contains less of the natural material characteristics and is produced within a more uniform color range.

Premium orders will be matched to obtain a look that is as uniform as possible. However, since each board is different, there may be slight differences in appearance and color between pieces. Premium products will contain fewer and smaller mineral streaks and pin knots than Standard grade. A Premium grade order will give you a job that is consistent throughout for color and material characteristics.

In Heartwood species, such as Cherry or Red Oak, no sapwood will be seen on the face of the door; in Sapwood species, such as Hard Maple, no heartwood will be seen on the face of the door.

Conestoga recommends Premium grade for natural and light tinted finishes.

Hickory is an exception to our normal Premium grade guidelines in that the color variations and lack of uniformity are a characteristic of Hickory. A Premium grade of this specie will include a narrower range of variation and fewer natural characteristics, but will not be uniform in heartwood or sapwood color.

Standard

Conestoga's Standard grade has been developed to meet a wide variety of applications and will provide a very versatile product at a reasonable cost. Standard grade material allows for many of the natural characteristics of the wood to be present in the product while limiting or eliminating the most objectionable. This material grade allows Conestoga to utilize as much of the natural resource as possible while still producing a product that meets the needs of our customers.

Even though each board has its own unique color and grain, staves will be matched for a pleasing appearance. Colors will be blended within each door. Character marks such as pin knots and mineral streaks are limited in size.

At times, vertical cuts will cross glue lines and may leave exposed glue on the edges of the product. While this is common in all species, the glue used in the production of Bamboo is dark in color and may be more apparent than is typical on hardwoods. Visible glue on the edges of Bamboo products are not considered defective.

In Heartwood species, such as Cherry or Red Oak, the amount of sapwood that is present on the face of a door is limited and will only be present in the profiled areas. Sapwood species, such as Hard Maple, limit heartwood to the machined areas.

Conestoga utilizes steamed Walnut. The steaming process turns light colored sapwood to grey. Conestoga's Standard grade Walnut allows a mix of heartwood and grey sapwood throughout both the face and profiled areas of the product. This grade is recommended for medium and dark finishes on Walnut. If no sapwood is desired, order Premium grade Walnut which eliminates all sapwood from the face.

Standard grade works well with most finishes. Light-tinted and clear finishes will accentuate the natural characteristics and color differences within the product. Two or more sample doors should be ordered and finished prior to ordering an entire kitchen.

Specie and Grade Characteristics (continued)

Paint Grade

Conestoga's "Paint Grade" was developed for paint applications and will be comprised of a random mix of four different species – Hard Maple, Red Birch, Soft Maple and White Birch. This grade allows the natural color range of the wood as well as some stain and mineral. This product will not be matched for color and will have heartwood and sapwood present in varying amounts. Knots, wormholes, and other defects that would cause voids are limited, providing a smooth paintable surface.

Individual components of each product will be comprised of a mix of Paint Grade species. Products within the same order may contain varying amounts of Hard Maple, Red Birch, Soft Maple and White Birch. **This grade is intended for painting only and is also available with an MDF panel option**.

Paint Grade Hard Maple

Conestoga's "Paint Grade Hard Maple" was developed specifically for those customers that prefer to use only Hard Maple components for paint applications. This grade will allow the natural color range of Hard Maple including stain and mineral. Products made from this grade will not be matched for color, with heartwood and sapwood present in varying amounts. Knots, wormholes and other defects that would cause voids are limited, providing a smooth paintable surface. **This grade is intended for painting only and is also available with an MDF panel option.**

Rustic Knotty

Conestoga's "Rustic Knotty" grade is available in Alder, Cherry, Hard Maple, Hickory and Red Oak. This grade was developed to provide our customers with a material that allows knots, split knots, ingrown bark, character marks and other natural characteristics. The knots are of varying size, both sound and unsound. This grade allows the natural color of the specie, wormholes and any other naturally occurring defects that may be present in wood. This product will not be matched for color and may have both sapwood and heartwood present in varying amounts. Voids will not be puttied.

Quarter Sawn

Conestoga's "Quarter Sawn" grade is specially cut White Oak lumber where logs are quartered and sliced across the grain resulting in a straight grain pattern. While maintaining the normal color range of flat cut Oak, this method of cutting eliminates cathedral grain, but still allows limited amounts of mineral and pin knots. Quarter Sawn lumber also contains a distinct characteristic called medullary wood rays or "flake". These flakes are clearly noticeable and will appear in a variety of sizes, patterns and directions that become more pronounced after finish is applied. Flakes will be present on the door panels, however, framing will consist of straight grain material that may or may not contain flakes.

Rift Cut

Conestoga's "Rift Cut" grade is specially cut Red Oak and White Oak lumber where logs are quartered, then sliced perpendicular to the growth rings of the tree. The result is a grain pattern that is relatively straight, but the spacing between the grain will vary. While maintaining the normal color range of plain sawn Red and White Oak, this method of cutting eliminates cathedral grain, but still allows limited amounts of mineral and pin knots. Rift Cut material differs from Quarter Sawn in that only limited amounts of medullary rays or flakes will be present. While the desired overall appearance of Rift Cut is straight grain, angled grain will occasionally be present, especially in longer length boards.

Specie and Grade Characteristics (continued)

The chart below shows our published specie and grade combinations. Many other species and grades are available with extended lead-times. Contact our Special Designs Department for non-published specie information.

Specie	Grade Availability				
	Premium	Standard	Rustic Knotty	Quarter Sawn	Rift Cut
Alder	No	Yes	Yes*	No	No
Bamboo**	No	Yes	No	No	No
Birch, Red	No	Yes	No	No	No
Birch, White	Yes	Yes	No	No	No
Cherry	Yes	Yes	Yes*	No	No
Hickory	Yes	Yes	Yes*	No	No
Mahogany	No	Yes	No	No	No
Maple, Hard	Yes	Yes	Yes*	No	No
Maple, Soft	No	Yes	No	No	No
Oak, Red	Yes	Yes	Yes*	No	Yes*
Oak, White	Yes	Yes	No	Yes*	Yes*
Paint Grade	No	Yes	No	No	No
Paint Grade Hard Maple	No	Yes	No	No	No
Pine, Clear	Yes	No	No	No	No
Pine, Knotty	No	Yes*	No	No	No
Walnut	Yes	Yes	No	No	No

* All mouldings will be clear; Knotty Pine, Quarter Sawn, Rift Cut and Rustic Knotty mouldings are not available.

** Bamboo products are limited to 95-3/4" in length and 47-1/4" in width when ordering vertical grain or 47-1/4" in length and 95-3/4" in width when ordering horizontal grain.

Alternative Material Characteristics

Decorative Laminate Veneer (DLV)

Conestoga's Allure DLV program provides an attractive, dimensionally stable and cost effective door, drawer front and accessory offering for the kitchen, bath and closet industries. All products are made with a TSCA/CARB2 compliant MDF substrate that is molded to create the desired framing and moulding profiles. These profiles are then profile wrapped with the same base materials as used with LPL and HPL decorative surfaces, but these wrapping grade materials have been specially treated to make them pliable without danger of fracturing during the wrapping process. DLV materials are extremely durable and in some, but not all cases, contain an anti-microbial agent that lasts for the lifetime of the product. The center panel materials are thermally fused melamine over a TSCA/CARB2 compliant MDF core. DLV materials come in a variety of colors and patterns commonly found across the U.S. market. Our 5-Piece doors and drawer fronts come in textures that will vary from smooth/satin surfaces to matte finishes, to linear textured patterns, to textured, registered and indexed panels. No finishing is necessary; doors can be removed from the packaging, hardware attached and mounted directly onto the cabinetry.

Medium Density Fiberboard (MDF)

Conestoga's MDF offering was developed as an alternative to solid wood panels for high humidity regions. MDF may be manufactured using a combination of softwood and hardwood fibers, adhesive and resins, resulting in materials that may vary in color depending on the wood fiber used. This mixture is inserted into a press and using high pressure and heat is compressed to the desired density and thickness. The end result is a very stable product that resists expansion and contraction as well as eliminating offset stave lines typically found in solid wood. Our MDF is sanded smooth by our suppliers, however, the finished product will require a primer before being painted to obtain a consistent finished appearance. Cutting through the outer surface to create a panel raise, decorative rout or edge profile will expose the board's internal fibers which are coarse and do not finish as consistently as the board's outer surface. To greatly reduce finishing issues associated with fiber raise, Conestoga recommends ordering our MDF Prep & Seal option (see Design Options section), which provides finish ready profiles.

Conestoga offers 1-Piece MDF, 5-Piece MDF, hybrid products (MDF panel with hardwood framing) and 1SGP (One Side Glueable Paintable) MDF. 1SGP MDF consists of a 3/4" thick MDF substrate with a paintable melamine film laminated to the back. The melamine film increases the stability of the routed 1-Piece recessed panel MDF products that use 1SGP MDF. There is a large selection of MDF board available in the market which can vary greatly in overall quality, density, internal bond and stability. Conestoga has tested many brands and grades of MDF and has chosen the material that provides the best quality results for machining and finishing. All MDF products offered by Conestoga are TSCA/CARB2 compliant.

Thermally Textured Surfaces (TTS)

Conestoga's Intrigue, Strata and Vogue TTS programs are designed with the transitional and contemporary markets in mind. These panels are manufactured by some of the world's premier producers of textured panels. The surfaces emulate traditional and rustic woods, rift cut lumber and a variety of other wood replicas in a diverse selection of textures. Textures range from straight grains to registered and indexed wood patterns complete with cathedrals, knots and other natural characteristics. These materials lend themselves to edgebanded Slab, 3-Piece and 5-Piece doors and drawer fronts. The specially treated surfaces are extremely durable and are applied to a TSCA/CARB2 compliant particleboard substrate using intense heat and pressure. Available in a large number of colors and patterns, finishing is not necessary as these products can go from the carton to the hardware table and right onto the cabinet, minimizing internal costs and lead-time.

Alternative Material Characteristics (continued)

High Gloss

Conestoga's Synchronicity High Gloss program features two different gloss materials:

PET (Polyethylene Terephthalate) – a 90° sheen high gloss board manufactured to a finished thickness of 19mm. The PET high gloss products are made by laminating a blended 3mil foil sheet of color and an acrylic topcoat to the surface of a TSCA/CARB2 compliant MDF substrate. The back of each sheet is laminated with a matching color, low texture material. Aggressively priced, PET high gloss surfaces are anti-microbial, food and beverage safe and can be used in kitchens, scholastic, medical and pharmaceutical applications.

UV Lacquer – gloss products consisting of a printed melamine paper applied to the face of a TSCA/CARB2 compliant substrate and a high solids UV (ultraviolet) cured topcoat applied over the melamine paper. The UV topcoat layer dries almost instantaneously and results in a 90° sheen level that is extremely durable. The back of the high gloss board is coated with a low texture, matching color melamine; whether the face is a solid color, wood grain, textile or other pattern.

Super Matte

Conestoga's Synchronicity Super Matte program offers 19mm panels that are composed of a TSCA/CARB2 compliant substrate. The MDF or particle board core (color specific) is bound between 5° sheen matte films on the face of the panel and a matching color melamine on the back. For additional stability and abrasion resistance, the matte films are covered with a layer of polyurethane and transparent primer, a layer of lacquer coating, and topped off with a protective, removable peel coat.

Conestoga Material Pricing Guide

Effective January 1, 2026
All prices are per square foot.

Species (Standard grade unless otherwise noted)	Material Category			Availability	
	A	B	C	Premium Grade	1" Thick
Alder				NA	A
Alder, Rustic Knotty				NA	A
Bamboo (Caramelized)				NA	NA
Birch, Red				NA	A
Birch, White				A	A
Cherry				A	A
Cherry, Rustic Knotty				NA	A
Hickory				A	A
Hickory, Rustic Knotty				NA	A
Maple, Hard				A	A
Maple, Hard, Rustic Knotty				NA	A
Maple, Soft				NA	A
MDF 1-Piece				NA	A
MDF 1-Piece w/1SGP				NA	NA
MDF 5-Piece				NA	A
Oak, Red				A	A
Oak, Red, Rift Cut				NA	A
Oak, Red, Rustic Knotty				NA	A
Oak, White				A	A
Oak, White, Quarter Sawn				NA	NA
Oak, White, Rift Cut				NA	A
Paint Grade				NA	A
Paint Grade Hybrid**				NA	A
Paint Grade Hard Maple				NA	A
Paint Grade Hard Maple Hybrid**				NA	A
Pine, Knotty*				A	A
Walnut				A	A

A = Available **NA = Not Available**

Premium Grade Upcharge Add 35% to Standard grade price. Veneer doors ordered in Premium grade will receive Premium framing and Standard grade panel.

1" Thick Material Upcharge Add 30% to Standard grade price for doors and drawer fronts.

Ordering both Premium and 1"

Frame Only Glass Doors Refer to “Frame-Only" page 6.1 in Accent Doors and Panels for pricing instructions.

*Knotty Pine crown and trim mouldings will be manufactured using Clear White Pine materials. If Clear White Pine doors, drawer fronts and front frames are desired signify Premium upgrade.

**Hybrid Products – Defined as solid wood framing with MDF panels. Hybrid Products are recommended when using opaque finishes such as Colourtones, Primers and Prism Paints to avoid stave lines and veneer checking after finish is applied.

Conestoga Material Pricing Guide

Effective January 1, 2026
All prices are per square foot.

Exterior Materials			
Species	Standard Grade Pricing		
	Material Category		
	A	B	C
Cypress*			
Mahogany (Sapele)*			
Teak**			
Thermally-Treated Poplar**			

*Exterior grade adhesive option available and recommended for any exterior use: upcharge per panel.
**Manufactured with exterior grade adhesives - no upcharge.
1" thick material available in Cypress and Mahogany.
Additional lead-time may be required.
Conestoga finishes are intended for interior use only. Exterior grade finish materials must be used for exterior cabinetry.

The chart below indicates how much a 12" wide panel of various exterior species can expand as a result of an increase in moisture content from 5% to 14%. For example, the chart reveals that a Teak panel that is 12" wide could expand by more than 3/16".
A lower value, as shown in the chart below, is directly related to the dimensional stability of the panel. For example, Teak (12.20") and Thermally Treated Poplar (12.11") are more dimensionally stable and consequently have a reduced risk of bow/warp/twist than the other species listed on this chart; however, bow/warp/twist are never eliminated.
As shown in the chart on page 3.4 and below, Hard Maple is used as the baseline for wood expansion; however, it is not intended to be used as an external specie.

Wood expansion caused by an increase in moisture content	
12" wide sample of wood at 5% moisture content	... and at 14%
Thermally-Treated Poplar	12.11"
Teak	12.20"
Cypress	12.23"
Mahogany (Sapele)	12.26"
Hard Maple	12.38"

Door Table of Contents

Albany 4.44-4.45
Alexandreia 4.52-4.53
Amesbury 4.44-4.45
Ardmore 4.52-4.53
Aspen 4.40-4.41
AspenPP 4.24-4.25
Astoria 4.64-4.65
Aurora 4.60-4.61
Boulder 4.40-4.41
BoulderPP 4.24-4.25
Bristol 4.44-4.45
Brivana 4.6-4.7
Churchill 4.48-4.49
Cortland 4.44-4.45
Crawford 4.6-4.7
CRP-10 ..... 4.6-4.7
CRP-10 (1" thick) 4.56-4.57
CRP-10 Miter 4.18-4.19
CRP-10A48 ..... 4.34-4.35
CRP-10A48 (1" thick) 4.56-4.57
CRP-10141 ..... 4.10-4.11
CRP-10161 ..... 4.34-4.35
CRP-101728 ..... 4.34-4.35
CRP-10191 ..... 4.18-4.19
CRP-10318 ..... 4.18-4.19
CRP-10334 ..... 4.18-4.19
CRP-10382 ..... 4.18-4.19
CRP-10382MT 4.6-4.7
CRP-10533 ..... 4.18-4.19
CRP-10605MT 4.6-4.7
CRP-10751 ..... 4.18-4.19
CRP-10751MT 4.6-4.7
CRP-10797 ..... 4.34-4.35
CRP-10827 ..... 4.18-4.19
CRP-10875 ..... 4.20-4.21
CRP-10946 ..... 4.20-4.21
CRP-1389 ..... 4.20-4.21
CRP-1389MT 4.6-4.7
CRP-1420 ..... 4.20-4.21
CRP-20 ..... 4.6-4.7
CRP-30 ..... 4.8-4.9
CRP-30 (1" thick) 4.56-4.57
EriksonPP 4.52-4.53
Fairhaven 4.44-4.45
Fargo 4.40-4.41
FargoPP 4.24-4.25
Flush Batten 4.60-4.61
Franklin 4.48-4.49
Geneva 4.10-4.11
Hancock 4.48-4.49
Juno 4.26-4.27
Lafayette 4.48-4.49
LaSalle 4.34-4.35
Madison 4.44-4.45
Marquis 4.34-4.35
Monarch Square 4.8-4.9
Monroe 4.48-4.49
Normandie (1" thick) 4.56-4.57
Omaha 4.40-4.41
OmahaPP 4.24-4.25
Presidential Miter 4.20-4.21
Presidential MiterPP 4.26-4.27
Presidential Square 4.8-4.9
Prestige 4.20-4.21
Provence (1" thick) 4.56-4.57
Radcliffe 4.34-4.35

Ridgemont....4.36-4.37
Rothsford....4.20-4.21
Rutland....4.20-4.21
RutlandMT....4.8-4.9
RutlandMTPP....4.12-4.13
RutlandPP....4.26-4.27
Savannah....4.8-4.9
SavannahMT....4.8-4.9
SavannahPP....4.12-4.13
Savoy....4.64-4.65
Sheldon....4.44-4.45
Soho....4.63A-4.63B
Staffordshire (1" thick)....4.56-4.57
Stockbridge....4.44-4.45
Topeka....4.40-4.41
TopekaPP....4.24-4.25
Tripoli....4.52-4.53
TW-10....4.12-4.13
TW-10 Miter....4.26-4.27
TW-1038....4.12-4.13
TW-10533....4.26-4.27
TW-10716....4.12-4.13
TW-10751....4.26-4.27
TW-10827....4.26-4.27
TW-10916....4.12-4.13
Venus....4.22-4.23
Venus (7/8" thick)....4.56-4.57
Verona....4.36-4.37
Vulcan....4.8-4.9
Wakefield....4.10-4.11
Wayland....4.36-4.37
Westminster....4.8-4.9
Woodhull....4.22-4.23
Woodridge (1" thick)....4.56-4.57
Yardley....4.52-4.53
Yuma....4.63A-4.63B

Drawer Front Table of Contents

10141 ..... 4.62-4.63
#10 ..... 4.62-4.63
1-1/8" Sandwich 4.62-4.63
Albany 4.46-4.47
Amesbury 4.46-4.47
Alexandreia 4.54-4.55
Ardmore 4.54-4.55
Aspen 4.42-4.43
AspenPP 4.32-4.33
Astoria 4.64-4.65
Aurora 4.62-4.63
Boulder 4.42-4.43
BoulderPP 4.32-4.33
Bristol 4.46-4.47
Brivana 4.14-4.15
Churchill 4.50-4.51
Cortland 4.46-4.47
Crawford 4.14-4.15
CRP-10 ..... 4.14-4.15
CRP-10 (1" thick) 4.58-4.59
CRP-10 Miter 4.28-4.29
CRP-10A48 ..... 4.38-4.39
CRP-10A48 (1" thick) 4.58-4.59
CRP-10141 ..... 4.14-4.15
CRP-10161 ..... 4.38-4.39
CRP-101728 ..... 4.38-4.39
CRP-10191 ..... 4.28-4.29
CRP-10318 ..... 4.28-4.29
CRP-10334 ..... 4.28-4.29
CRP-10382 ..... 4.28-4.29
CRP-10382MT 4.14-4.15
CRP-10533 ..... 4.28-4.29
CRP-10605MT 4.14-4.15
CRP-10751 ..... 4.28-4.29
CRP-10751MT 4.14-4.15
CRP-10797 ..... 4.38-4.39
CRP-10827 ..... 4.28-4.29
CRP-10875 ..... 4.28-4.29
CRP-10946 ..... 4.28-4.29
CRP-1389 ..... 4.28-4.29
CRP-1389MT 4.14-4.15
CRP-1420 ..... 4.30-4.31
EriksonPP 4.54-4.55
Fairhaven 4.46-4.47
Fargo 4.42-4.43
FargoPP 4.32-4.33
Franklin 4.50-4.51
Geneva 4.14-4.15
Hancock 4.50-4.51
Hastings 4.42-4.43
Juno 4.30-4.31
Keystone 4.62-4.63
Lafayette 4.50-4.51
LaSalle 4.38-4.39
Madison 4.46-4.47
Marcel 4.62-4.63
Marquis 4.38-4.39
Monarch Square 4.14-4.15
Monroe 4.50-4.51
Normandie (1" thick) 4.58-4.59
Omaha 4.42-4.43
OmahaPP 4.32-4.33
Presidential 4.14-4.15
Presidential Miter 4.30-4.31
Prestige 4.30-4.31
Provence (1" thick) 4.58-4.59

Radcliffe 4.38-4.39
Ridgemont..... 4.38-4.39
Rothbury.....4.42-4.43
Rothsford.....4.30-4.31
Rutland.....4.30-4.31
RutlandMT 4.16-4.17
RutlandMTPP.....4.16-4.17
RutlandPP 4.30-4.31
Savannah 4.16-4.17
SavannahMT.....4.16-4.17
SavannahPP 4.16-4.17
Savoy 4.64-4.65
Sheldon.....4.46-4.47
Slab 4.62-4.63
Soho.....4.63A-4.63B
Staffordshire (1" thick).....4.58-4.59
Stockbridge.....4.46-4.47
Topeka.....4.42-4.43
TopekaPP.....4.32-4.33
Tripoli..... 4.54-4.55
TW-10.....4.16-4.17
TW-1038.....4.16-4.17
TW-10716.....4.16-4.17
TW-10916.....4.16-4.17
Venus 4.30-4.31
Venus (7/8" thick) 4.58-4.59
Verona..... 4.38-4.39
Vulcan 4.16-4.17
Wakefield 4.16-4.17
Wayland 4.38-4.39
Westminster 4.16-4.17
Woodhull 4.30-4.31
Woodridge (1" thick).....4.58-4.59
Yardley 4.54-4.55
Yuma 4.63A-4.63B

Pricing Procedure for Doors and Drawer Fronts

The price for any custom door or drawer front can be easily calculated by inserting the relevant numbers into the chart below. A brief explanation for reference is given for each required number.

Example 1 – 1 CRP-10 in Standard Grade Hard Maple, 3/4" thick, 15" x 25"

Example 2 – 1 CRP-10 with radius corners in Premium Hard Maple, 1" thick, 15" x 25"



CRP-10

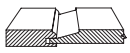

7-1/2" x 7-1/2"

Design Charge

See wood CRP-10 door in Doors/ Drawer Fronts tabbed section under Raised Panel listing Page 4.6.

Total Design Charge

Design Charge + Design Options

Design Options

Refer to Options on Offering and Availability Chart on page 4.7 and Design Options tabbed section.

plus

One Inch Thick Upcharge

(30% doors and drawer fronts) See Material Pricing Guide tab. These optional charges will be incurred only if specifying one-inch thick product rather than our standard 3/4" thickness.

Material Charge

See Material Pricing Guide tab (as shown below). Prices are per sq. ft. Door minimums: 1 sq. ft. Drawer fronts: none.

Total Material Charge

Material Charge X One Inch Thick Upcharge (30%) X Premium Material Upcharge (35%) X Square Footage

Square Footage

Calculate the square footage of the item being ordered. Multiply the height by the width in inches and divide the result by 144.

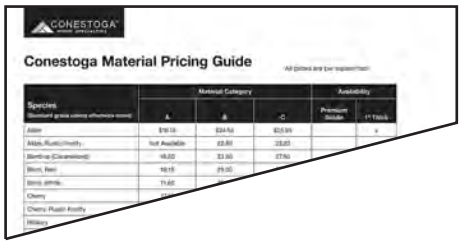

equals

Premium Material Upcharge (35%)

See Material Pricing Guide tab. This optional 35% charge will be incurred only if specifying our Premium grade wood, rather than Standard grade.

Total List Price X Cost Multiplier

Cost Multiplier

List price minus trade discount.

equals

Total Charge After Discount

Product Design Choices

All of Conestoga's door and drawer front prices include a choice of edge profile, framing bead and panel raise. However, L-297, L-304 and LC-Inset edge profiles incur an extra charge. For complete details on available options and associated prices, see the Design Options Section.

Before pricing a door or drawer front, verify the availability of the desired options on the design by referring to the Offering and Availability information found immediately after each door design page.

Multiple panel doors have Design Charges equivalent to the number of panels ordered. As an example, a CRP-10 with three panels uses the Design Charge. This policy excludes doors that come standard with multiple panels. *Due to construction complexity, all multiple panel miter doors include an additional charge per center stile or midrail plus the per-panel Design Charge.*

M&T Raised Panel Doors

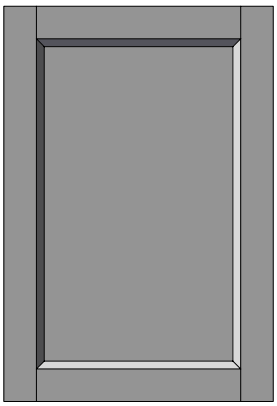

Brivana
matching drawer front available

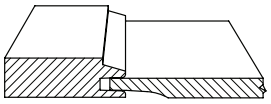

7-1/2" x 7-1/2"
2-1/4" framing
3/8" Reverse G-Cove raise shown



Crawford
matching drawer front available

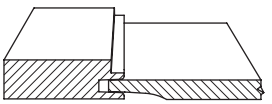

7" x 6-3/4"
2-1/4" framing
3/8" Reverse G-Cove raise shown



CRP-10
matching drawer front available

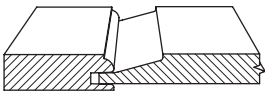

7-1/2" x 7-1/2"
2-1/4" framing
Slant raise shown

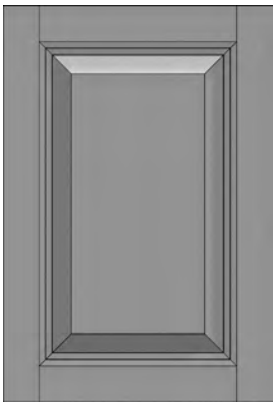

CRP-10382MT
matching drawer front available

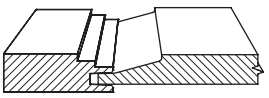

8-3/8" x 8-3/8"
2-3/4" framing
Slant raise shown

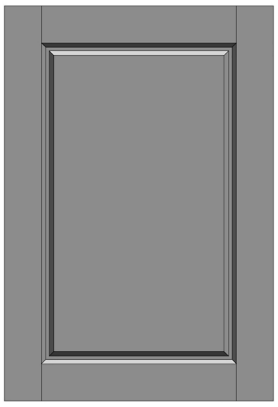

CRP-10605MT
matching drawer front available

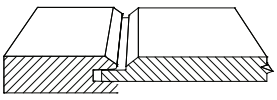

7-1/2" x 7-1/2"
2-1/4" framing
P-016 raise shown



CRP-10751MT
matching drawer front available

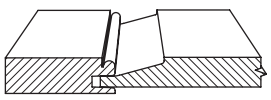

7-1/2" x 7-1/2"
2-5/16" framing
Slant raise shown



CRP-1389MT
matching drawer front available

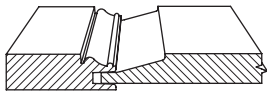

8-3/8" x 8-3/8"
2-3/4" framing
Slant raise shown



CRP-20

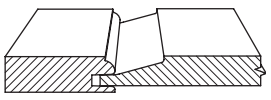

8-1/4" x 9-1/4"
2-1/4" framing
Slant raise shown

Due to construction complexity, all multiple panel CRP-10382MT, CRP-10751MT and CRP-1389MT doors include an additional charge per middle rail and middle stile plus the per-panel Design Charge. Vertical grain direction standard unless otherwise noted; horizontal grain available upon request. Minimums listed are based on panel raise shown and will vary by raise; see Offering and Availability for additional options. Framing width listed is determined by measuring across the back of the framing unless otherwise noted. Narrow point of arched and cathedral rails are equal to the width of the stiles.

Offering And Availability

All Conestoga products are available in a wide variety of specifications to satisfy your custom needs. The information below indicates any exceptions or limitations pertaining to the designs on the previous page. For a detailed listing of a particular product specification, refer to the page indicated.

Species	
Material Pricing Guide	CRP-10 and CRP-20 – all 3/4" and 1" species available. Brivana and Crawford – all 3/4" species available. CRP-10605MT – all 3/4" species available except Rustic Knotty. CRP-10382MT, CRP-10751MT and CRP-1389MT – all 3/4" species available except Rift Cut Red Oak and Rustic Knotty.
Edge Profiles	
pg 7.1	CRP-10 and CRP-20 – all 3/4" and 1" profiles available. Brivana and Crawford, CRP-10382MT, CRP-10605MT, CRP-10751MT and CRP-1389MT – all 3/4" profiles only.
Framing Beads	
pg 7.2	Brivana, Crawford, CRP-10382MT, CRP-10605MT, CRP-10751MT and CRP-1389MT – design specific, no options available. All other designs all 3/4" and 1" profiles available.
Panel Raises	
pg 7.2A	CRP-10 and CRP-20 - all 3/4" and 1" profiles available. Brivana and Crawford, CRP-10382MT, CRP-10751MT and CRP-1389MT – all 3/4" profiles only. CRP-10605MT – P-016, P-057, P-106 and Reverse G-Cove only.
Options	
pgs 7.3-7.15	All options available except Essex Rout on CRP-10605MT, CRP-10751MT and CRP-1389MT.
Mullions/Frame Only	
pgs 6.1-6.13	All designs - available in frame only and mullions. Brivana, Crawford, CRP-10382MT, CRP-10605MT, CRP-10751MT and CRP-1389MT mullions incur special lite charges.
Matching/Complementary Drawer Fronts	
pgs 4.14-4.15, 4.62-4.63	Available for Brivana, Crawford, CRP-10, CRP-10382MT, CRP-10605MT, CRP-10751MT and CRP-1389MT.

M&T Raised Panel Doors



CRP-30

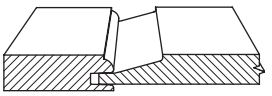

8-1/4" x 8-1/2"
2-1/4" framing
Slant raise shown



Monarch Square
matching drawer front available

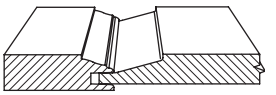

7-1/2" x 7-1/2"
2-1/4" framing
Slant raise shown



Presidential Square
matching drawer front available

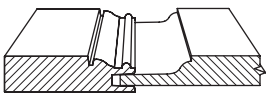

8-3/8" x 8-3/8"
2-3/4" framing
Presidential raise shown

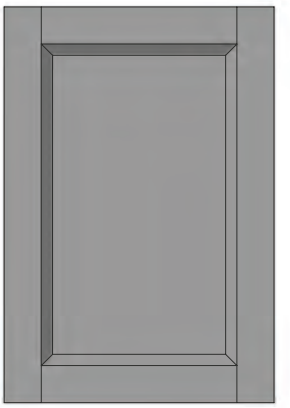

RutlandMT
matching drawer front available

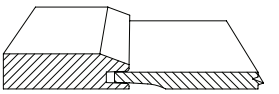

8-1/4" x 8-1/4"
2-11/16" framing
3/8" Reverse G-Cove
raise shown

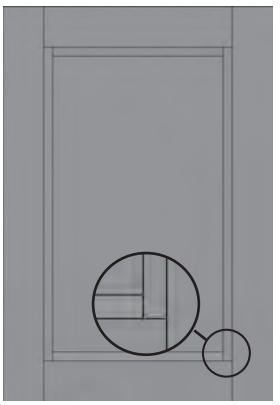

Savannah
matching drawer front available

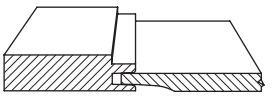

7-7/8" x 7-5/8"
2-3/4" framing
3/8" Reverse G-Cove
raise shown

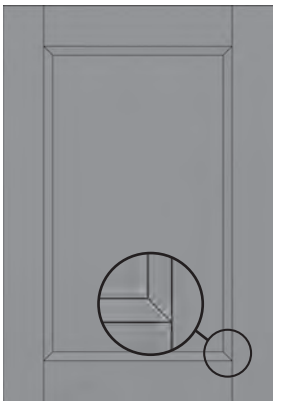

SavannahMT
matching drawer front available

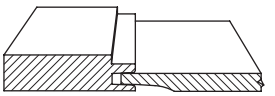

7-7/8" x 7-5/8"
2-3/4" framing
3/8" Reverse G-Cove
raise shown



Vulcan
matching drawer front available

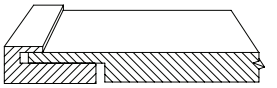

7-1/2" x 5-1/4"
3/4" wide framing on face
25/32" thick framing



Westminster
matching drawer front available

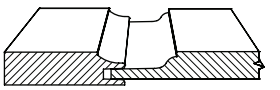

8-3/8" x 8-3/8"
2-3/4" framing
Presidential raise shown

Due to construction complexity, all multiple panel Presidential Square, RutlandMT and SavannahMT doors include an additional charge per middle rail and middle stile plus the per-panel Design Charge. Vertical grain direction standard unless otherwise noted; horizontal grain available upon request. Minimums listed are based on panel raise shown and will vary by raise; see Offering and Availability for additional options. Framing width listed is determined by measuring across the back of the framing unless otherwise noted.

Offering And Availability

All Conestoga products are available in a wide variety of specifications to satisfy your custom needs. The information below indicates any exceptions or limitations pertaining to the designs on the previous page. For a detailed listing of a particular product specification, refer to the page indicated.

Species	
Material Pricing Guide	CRP-30 and Monarch Square – all 3/4" and 1" species available. Presidential Square, RutlandMT – all 3/4" species except Bamboo, Rift Cut Red Oak, Rift Cut White Oak and Rustic Knotty. RutlandMT – all 3/4" species except Bamboo, Rift Cut Red Oak and Rustic Knotty. SavannahMT – all 3/4" species available except Rift Cut Red Oak and Rustic Knotty. Savannah and Westminster – all 3/4" species available. Vulcan – all 3/4" species available except Bamboo, Hickory, Knotty Pine, Paint Grade, Rustic Knotty, Soft Maple and White Birch.
Edge Profiles	
pg 7.1	Vulcan – B-2, L-034, L-149, L-253, L-686, L-1160, Machine Edge and V-2 only. All other designs – all 3/4" profiles available. CRP-30 and Monarch Square – all 1" profiles available.
Framing Beads	
pg 7.2	CRP-30 – all 3/4" and 1" profiles available. All other designs – design specific, no options available.
Panel Raises	
pg 7.2A	CRP-30 – all 3/4" and 1" profiles available. Vulcan – design specific, no options available. All other designs – all 3/4" profiles available. **Note:** Vulcan doors 24" x 55" and larger utilize 3/8" plywood or MDF center panels. Design Charge for doors 9.16 to 11.99 square feet. Design Charge for doors 12.00 square feet and larger. Material Category A applies.
Options	
pgs 7.3-7.15	Vulcan – concealed hinge boring, back routed hand pull, sample ID label, antiquing, non-standard rail width, distressing, G-012, G-015, G-056 panel grooves, wear sanding and hybrid seal coat. All other designs – all options available except Essex Rout. **Note:** Vulcan – eligible for wide rails only, stiles not eligible. Upcharge per rail applies. Regardless of overall desired height, Vulcan wide rails will contain one glue joint if wide rail option is selected. **Note:** Savannah – not eligible for Colourtone, primer or Prism Paints unless ordered as 5-Piece MDF. See Section 5 for product details. SavannahMT – available with all finishes.
Mullions/Frame Only	
pgs 6.1-6.13	Vulcan – available in frame only and mullions. Design Charge is applicable. Multi-panel frame only doors not available. Because the frame only design uses drill & dowel construction, vertical joint lines are visible where rails intersect with stiles. All other designs - available in frame only and mullions. CRP-30 mullion – incurs standard lite charges. All other mullion designs incur special lite charges. **Note:** Vulcan framing width on the face of the frame only door is 2-1/2".
Matching/Complementary Drawer Fronts	
pgs 4.14-4.17, 4.62-4.63	Matching drawer fronts available except CRP-30.

M&T Raised Panel Doors



CRP-10141
matching drawer front available

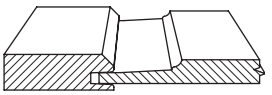

Stile cross section

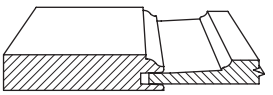

Rail cross section

8" x 10-1/8"
3-3/8" rail width
2-1/4" stile width
P-106 raise shown

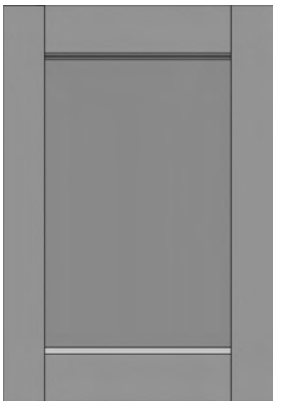

Geneva
matching drawer front available

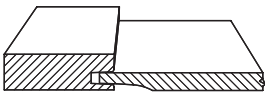

Stile cross section

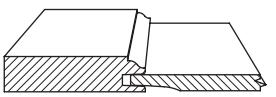

Rail cross section

7" x 8-1/8"
3" rail width
2-1/4" stile width
3/8" Reverse G-Cove
raise shown

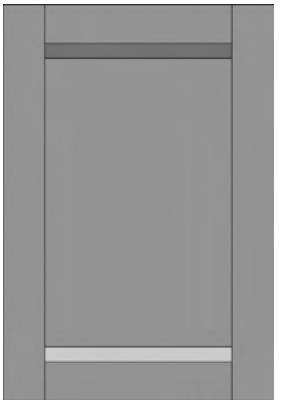

Wakefield
matching drawer front available

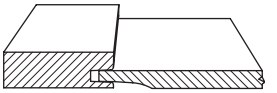

Stile cross section

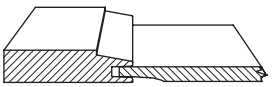

Rail cross section

7" x 8-1/8"
3" rail width
2-1/4" stile width
3/8" Reverse G-Cove
raise shown

Vertical grain direction standard unless otherwise noted; horizontal grain available upon request. Minimums listed are based on panel raise shown and will vary by raise; see Offering and Availability for additional options. Framing width listed is determined by measuring across the back of the framing unless otherwise noted.

Offering And Availability

All Conestoga products are available in a wide variety of specifications to satisfy your custom needs. The information below indicates any exceptions or limitations pertaining to the designs on the previous page. For a detailed listing of a particular product specification, refer to the page indicated.

Species	
Material Pricing Guide	All 3/4" species available.
Edge Profiles	
pg 7.1	All 3/4" profiles available.
Framing Beads	
pg 7.2	CRP-10141 and Wakefield – design specific, no options. CRP-10141 – Ogee bead on rails with chamfered stiles. Wakefield – FB01016 on rails with Square bead stiles. Geneva – rail options: Elite, F007, F877, F1223; Ogee or Regular with Square bead stiles standard, no options.
Panel Raises	
pg 7.2A	All 3/4" profiles available.
Options	
pgs 7.3-7.15	All options available except Essex Rout.
Mullions/Frame Only	
pgs 6.1-6.13	All designs - available in frame only and mullions. Square bead mullions standard. All mullions incur special lite charges.
Matching/Complementary Drawer Fronts	
pgs 4.14-4.17, 4.62-4.63	All available.

M&T Plywood Panel Doors

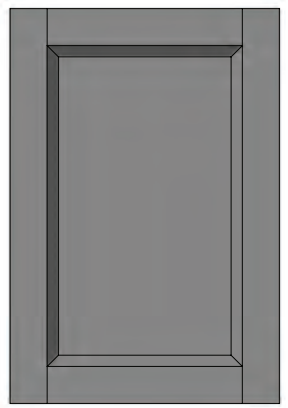

RutlandMTPP
matching drawer front available

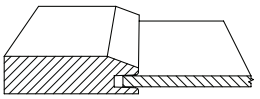

7-3/4" x 7-3/4"
2-11/16" framing
1/4" Veneered Panel

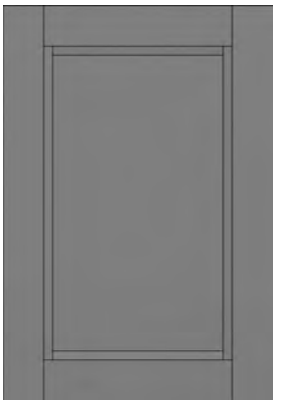

SavannahPP
matching drawer front available

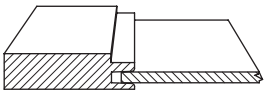

7-7/8" x 5-7/8"
2-3/4" framing
1/4" Veneered Panel



TW-10
matching drawer front available

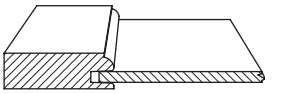

7" x 5"
2-1/4" framing
1/4" Veneered Panel

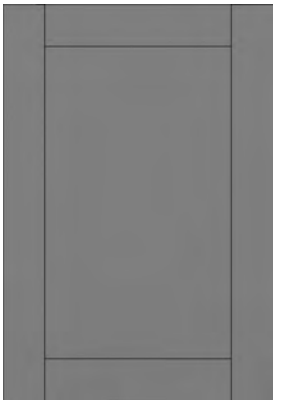

TW-1038
matching drawer front available

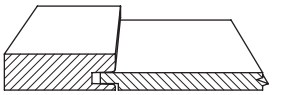

7" x 6-1/2"
2-1/4" framing
3/8" Veneered Panel

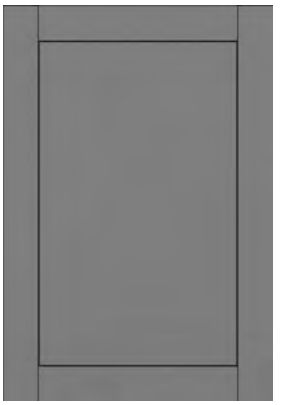

TW-10716
matching drawer front available

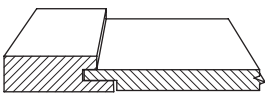

7" x 5-7/8"
Face - 1-7/8" framing
Back - 2-1/4" framing
7/16" Veneered panel

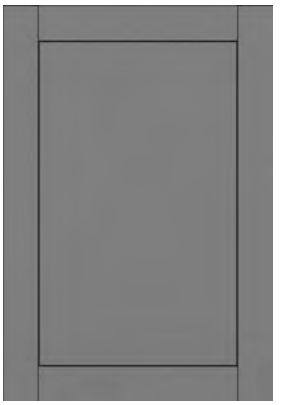

TW-10916
matching drawer front available

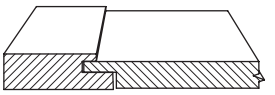

7" x 5-7/8"
Face - 1-7/8" framing
Back - 2-1/4" framing
9/16" Veneered panel

Due to construction complexity, all multiple panel RutlandMTPP doors include an additional charge per middle rail and middle stile plus the per-panel Design Charge. All plywood panel designs use a veneered, composite core panel. All plywood panels except Red and White Birch, Quarter Sawn White Oak and Rift Cut Red and White Oak use a plain sliced or half round face and plain sliced or rotary back veneer. Red and White Birch use a rotary face and back. Quarter Sawn White Oak uses a quarter sawn face and plain sliced back. Rift Cut Red Oak uses a rift cut on face and back. Rift Cut White Oak uses a rift cut face and plain sliced back. Vertical grain direction standard unless otherwise noted; horizontal grain available upon request. Framing width listed is determined by measuring across the back of the framing unless otherwise noted.

Offering And Availability

All Conestoga products are available in a wide variety of specifications to satisfy your custom needs. The information below indicates any exceptions or limitations pertaining to the designs on the previous page. For a detailed listing of a particular product specification, refer to the page indicated.

Species	
Material Pricing Guide	RutlandMTPP - All 3/4" species available except Rift Cut Red Oak, Rustic Knotty and Soft Maple. SavannahPP and TW-10 – all 3/4" species available except Rustic Knotty and Soft Maple. TW-10 – all 1" species available except Rustic Knotty and Soft Maple. TW-1038 – 3/4" Cherry, Hard Maple, Paint Grade Hard Maple Hybrid, Quarter Sawn White Oak, Red Oak, Rift Cut Red Oak, Rift Cut White Oak, White Oak and Walnut only. TW-10716 – 3/4" Cherry, Hard Maple and Paint Grade Hard Maple Hybrid only. TW-10916 – 3/4" Cherry, Hard Maple, Paint Grade Hard Maple Hybrid, Red Oak, Rift Cut Red Oak, Rift Cut White Oak and Walnut only.
Edge Profiles	
pg 7.1	All 3/4" edge profiles available. TW-10 – all 3/4" and 1" edge profiles available.
Framing Beads	
pg 7.2	TW-10 – all 3/4" and 1" profiles available. TW-1038 – all 3/4" profiles available. RutlandMTPP, SavannahPP, TW-10716 and TW-10916 – design specific, no options available.
Panel Raises	
pg 7.2A	RutlandMTPP, SavannahPP and TW-10 – 1/4" veneered panel only. TW-1038 – 3/8" veneered panel only. TW-10716 – 7/16" veneered panel only. TW-10916 – 9/16" veneered panel only.
Options	
pgs 7.3-7.15	RutlandMTPP - all options available except Essex Rout. All other designs - all options available. **Note:** SavannahPP – not eligible for Colourtone, primer or Prism Paints unless ordered as 5-Piece MDF. See Section 5 for product details.
Mullions/Frame Only	
pgs 6.1-6.13	All designs - available in frame only and mullions except TW-10716 and TW-10916, which are only available in frame only. For TW-10716 and TW-10916 mullion designs, order as CRP-10 mullion with Square bead framing and Square bead mullions. RutlandMTPP and SavannahPP mullions – incurs special lite charges.
Matching/Complementary Drawer Fronts	
pgs 4.16-4.17, 4.62-4.63	All available.

M&T Drawer Fronts

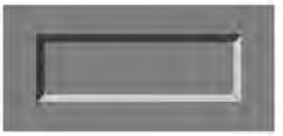

Brivana

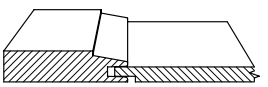

7-1/2" x 3-7/8"
1-1/2" rails
2-1/4" stiles
P-057 raise shown



Crawford

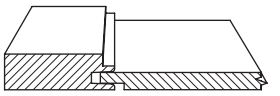

7" x 3-7/8"
1-1/2" rails
2-1/4" stiles
P-057 raise shown



CRP-10

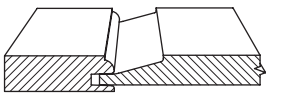

7-1/2" x 5-3/4"
1-1/2" rails
2-1/4" stiles
Slant raise shown



CRP-10141

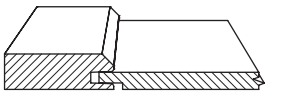

Stile cross section

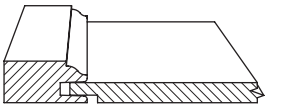

Rail cross section

7" x 5-1/4"
1-1/2" rails
2-1/4" stiles
P-057 raise shown



CRP-10382MT

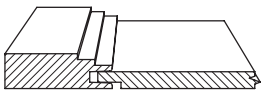

7-7/8" x 4-7/8"
2" rails
2-3/4" stiles
P-057 raise shown



CRP-10605MT

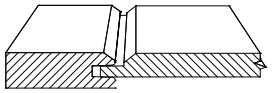

7-1/2" x 5-1/8"
1-1/2" rails
2-1/4" stiles
P-016 raise shown



CRP-10751MT

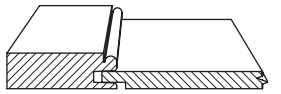

7" x 5-1/2"
2-5/16" framing
P-057 raise shown



CRP-1389MT

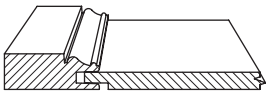

7-7/8" x 4-7/8"
2" rails
2-3/4" stiles
P-057 raise shown



Geneva

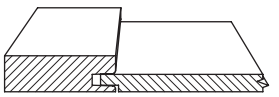

Stile cross section

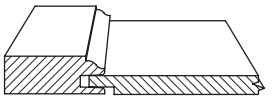

Rail cross section

7" x 4-7/8"
2" rails
2-1/4" stiles
P-057 raise shown



Monarch Square

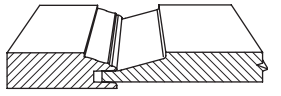

7-1/2" x 5-3/4"
1-1/2" rails
2-1/4" stiles
Slant raise shown



Presidential

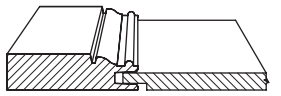

7-7/8" x 6-3/8"
2-3/4" framing
P-057 raise shown

All plywood panel designs use a veneered, composite core panel. All plywood panels except Red and White Birch, Quarter Sawn White Oak and Rift Cut Red and White Oak use a plain sliced or half round face and plain sliced or rotary back veneer. Red and White Birch use a rotary face and back. Quarter Sawn White Oak uses a quarter sawn face and plain sliced back. Rift Cut Red Oak uses a rift cut on face and back. Rift Cut White Oak uses a rift cut face and plain sliced back. Horizontal grain direction standard unless otherwise noted; vertical grain available upon request. Minimums listed are based on panel raise shown and will vary by raise; see Offering and Availability for additional options. Framing width listed is determined by measuring across the back of the framing unless otherwise noted.

Offering And Availability

All Conestoga products are available in a wide variety of specifications to satisfy your custom needs. The information below indicates any exceptions or limitations pertaining to the designs on the previous page. For a detailed listing of a particular product specification, refer to the page indicated.

Species	
Material Pricing Guide	Brivana, Crawford, CRP-10, CRP-10141, Geneva and Monarch Square – all 3/4" species available. CRP-10 – all 1" species available. CRP-10382MT, CRP-10751MT, CRP-1389MT and Presidential – all 3/4" species available except Rift Cut Red Oak and Rustic Knotty. CRP-10605MT – all 3/4" species available except Rustic Knotty.
Edge Profiles	
pg 7.1	CRP-10 – All 3/4" and 1" profiles available. All other designs – all 3/4" profiles available.
Framing Beads	
pg 7.2	CRP-10 – all 3/4" and 1" profiles available. Geneva – rail options: Elite, F007, F877, F1223, Ogee or Regular with Square bead, stile, Square bead rails standard, no options. All other designs – design specific, no options available.
Panel Raises	
pg 7.2A	CRP-10 – all 3/4" and 1" profiles available. All other designs except CRP-10605MT – 3/4" profiles available. CRP-10605MT – P-016, P-057, P-106 and Reverse G-Cove only.
Options	
pgs 7.3-7.15	All designs – G-012, G-015 and G-056 panel grooves, back-routed hand pull, sample ID label, distressing, wear sanding, pegs and radius corners.

M&T Drawer Fronts



RutlandMT

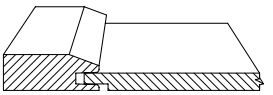

7-3/4" x 5"
2-1/16" rails
2-11/16" stiles
P-057 raise shown



RutlandMTPP

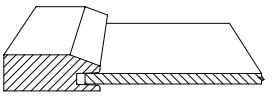

7-3/4" x 5"
2-1/16" rails
2-11/16" stiles
1/4" Veneered panel



Savannah

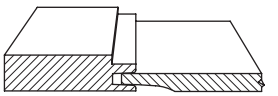

7-7/8" x 5-1/8"
1-1/2" rails
2-3/4" stiles
3/8" Reverse G-Cove raise shown



SavannahMT

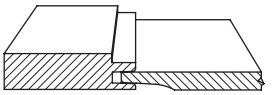

7-7/8" x 5-1/8"
1-1/2" rails
2-3/4" stiles
3/8" Reverse G-Cove raise shown



SavannahPP

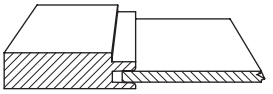

7-7/8" x 3-3/8"
1-1/2" rails
2-3/4" stiles
1/4" Veneered panel



TW-10

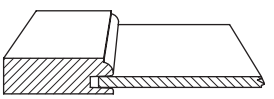

7" x 3-3/8"
1-1/2" rails
2-1/4" stiles
1/4" Veneered panel



TW-1038

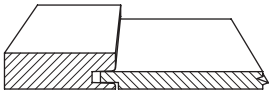

7" x 4"
1-1/2" rails
2-1/4" stiles
3/8" Veneered panel



TW-10716

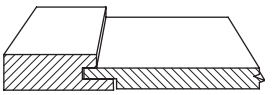

7" x 5-1/8"
1-7/8" on face
2-1/4" on back
7/16" Veneered panel

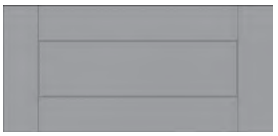

TW-10916

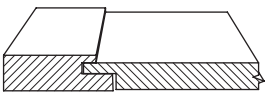

7" x 5-1/8"
1-7/8" on face
2-1/4" on back
9/16" Veneered panel



Vulcan

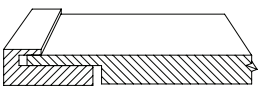

7-1/2" x 4-7/8"
3/4" wide framing on face
25/32" thick framing



Wakefield

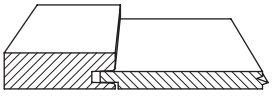

Stile cross section

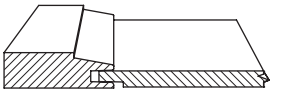

Rail cross section

7" x 4-7/8"
2" rails
2-1/4" stiles
P-057 raise shown



Westminster

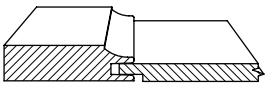

7-7/8" x 4-7/8"
1-1/2" rails
2-3/4" stiles
P-057 raise shown

All plywood panel designs use a veneered, composite core panel. All plywood panels except Red and White Birch, Quarter Sawn White Oak and Rift Cut Red and White Oak use a plain sliced or half round face and plain sliced or rotary back veneer. Red and White Birch use a rotary face and back. Quarter Sawn White Oak uses a quarter sawn face and plain sliced back. Rift Cut Red Oak uses a rift cut on face and back. Rift Cut White Oak uses a rift cut face and plain sliced back. Horizontal grain direction standard unless otherwise noted; vertical grain available upon request. Minimums listed are based on panel raise shown and will vary by raise; see Offering and Availability for additional options. Framing width listed is determined by measuring across the back of the framing unless otherwise noted.

Offering And Availability

All Conestoga products are available in a wide variety of specifications to satisfy your custom needs. The information below indicates any exceptions or limitations pertaining to the designs on the previous page. For a detailed listing of a particular product specification, refer to the page indicated.

Species	
Material Pricing Guide	Savannah, Wakefield and Westminster – all 3/4" species available. RutlandMT and RutlandMTPP – all 3/4" species available except Rift Cut Red Oak, Rustic Knotty and Soft Maple. SavannahPP and TW-10 – all 3/4" species available except Rustic Knotty and Soft Maple. SavannahMT – all 3/4" species available except Rift Cut Red Oak and Rustic Knotty. TW-10 – all 1" species available except Rustic Knotty and Soft Maple. TW-1038 – 3/4" Cherry, Hard Maple, Paint Grade Hard Maple Hybrid, Quarter Sawn White Oak, Red Oak, Rift Cut Red Oak, Rift Cut White Oak, White Oak and Walnut only. TW-10716 – 3/4" Cherry, Hard Maple and Paint Grade Hard Maple Hybrid only. TW-10916 – 3/4" Cherry, Hard Maple, Paint Grade Hard Maple Hybrid, Red Oak, Rift Cut Red Oak, Rift Cut White Oak and Walnut only. Vulcan - all 3/4" species available except Bamboo, Hickory, Knotty Pine, Paint Grade, Rustic Knotty, Soft Maple and White Birch.
Edge Profiles	
pg 7.1	Vulcan - B-2, L-034, L-149, L-253, L-686, L-1160, Machine Edge and V-2 only. All other designs – all 3/4" profiles available.
Framing Beads	
pg 7.2	TW-10 and TW-1038 – all 3/4" profiles available. All other designs – design specific, no options available.
Panel Raises	
pg 7.2A	RutlandMTPP, Savannah, SavannahPP, SavannahMT and TW-10 – 1/4" veneered panel only. TW-1038 – 3/8" veneered panel only. TW-10716 – 7/16" veneered panel only. TW-10916 – 9/16" veneered panel only. Vulcan – design specific, no options available. All other designs – all 3/4" profiles available. **Note:** Vulcan drawer fronts 24" x 55" and larger utilize 3/8" plywood or MDF center panels. Design Charge for drawer fronts 9.16 to 11.99 square feet. Design Charge for drawer fronts 12.00 square feet and larger. Material Category A applies.
Options	
pgs 7.3-7.15	Vulcan - panel grooves, back-routed hand pull, sample ID label, antiquing, non-standard width rails, distressing, G-012, G-015, G-056 panel grooves, wear sanding and hybrid seal coat. All other designs – G-012, G-015 and G-056 panel grooves, back-routed hand pull, distressing, wear sanding, pegs, radius corners and sample ID label. **Note:** Vulcan – eligible for wide rails only, stiles not eligible. Upcharge per rail applies. Regardless of overall desired height, Vulcan wide rails will contain one glue joint if wide rail option is selected. **Note:** Savannah and SavannahPP – not eligible for Colourtone, primer or Prism Paints unless ordered as 5-Piece MDF, see Section 5 for product details. See SavannahMT design if primer, Colourtones or Prism Paint are required.

Miter Raised Panel Doors



CRP-10 Miter
matching drawer front available

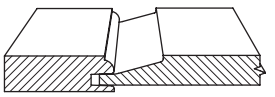

7-1/2" x 7-1/2"
2-5/16" framing
Slant raise shown



CRP-10191
matching drawer front available

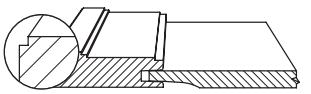

7-1/8" x 7-1/8"
2-1/2" framing
3/8" Reverse G-Cove raise shown



CRP-10318
matching drawer front available

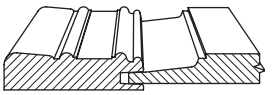

8-7/8" x 8-7/8"
2-15/16" framing
Louis XIII raise shown
5/16" radius corners on framing standard

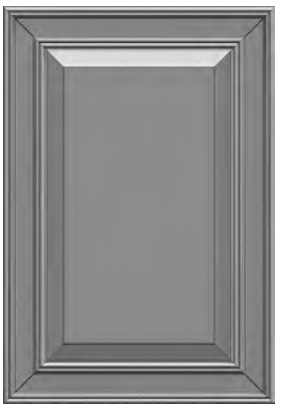

CRP-10334
matching drawer front available

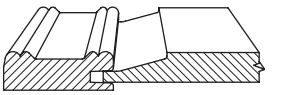

7-1/2" x 7-1/2"
2-5/16" framing
Slant raise shown



CRP-10382
matching drawer front available

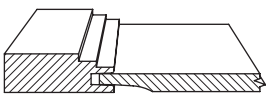

6-3/4" x 6-3/4"
2-5/16" framing
3/8" Reverse G-Cove raise shown



CRP-10533
matching drawer front available

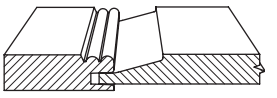

7-1/2" x 7-1/2"
2-5/16" framing
Slant raise shown

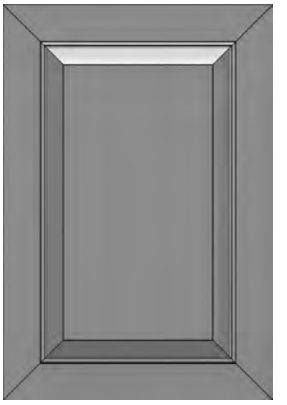

CRP-10751
matching drawer front available

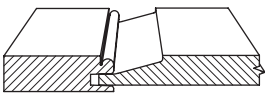

7-1/2" x 7-1/2"
2-5/16" framing
Slant raise shown



CRP-10827
matching drawer front available

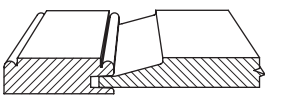

7-1/2" x 7-1/2"
2-5/16" framing
Slant raise shown

Due to construction complexity, all multiple panel miter doors will include an additional charge per middle and upright rail plus the per-panel Design Charge. Vertical grain direction standard unless otherwise noted; horizontal grain available upon request. Minimums listed are based on panel raise shown and will vary by raise; see Offering and Availability for additional options. Framing width listed is determined by measuring across the back of the framing unless otherwise noted.

Offering And Availability

All Conestoga products are available in a wide variety of specifications to satisfy your custom needs. The information below indicates any exceptions or limitations pertaining to the designs on the previous page. For a detailed listing of a particular product specification, refer to the page indicated.

Species	
Material Pricing Guide	CRP-10191 – all 3/4" species available except Bamboo, Rift Cut Red Oak and Rustic Knotty. All other designs – all 3/4" species available except Rift Cut Red Oak and Rustic Knotty. CRP-10 Miter – all 1" species available except Bamboo, Rift Cut Red Oak and Rustic Knotty.
Edge Profiles	
pg 7.1	CRP-10 Miter – all 3/4" and 1" profiles available. CRP-10382, CRP-10533 and CRP-10751 – all 3/4" profiles available. CRP-10318 – standard as shown, C-2, LC-2 and PRS-2 profiles also available. CRP-10191, CRP-10334 and CRP-10827 – design specific, no options available.
Framing Beads	
pg 7.2	CRP-10 Miter – all 3/4" and 1" profiles available. All other designs – design specific, no options available.
Panel Raises	
pg 7.2A	CRP-10 Miter – all 3/4" and 1" profiles available. All other designs – all 3/4" profiles available.
Options	
pgs 7.3-7.15	All designs – back-routed hand pull, sample ID label, concealed hinge boring, distressing, G-012, G-015 and G-056 panel grooves, Soss hinge boring and wear sanding. CRP-10318 – radius corners standard, square corners can be specified. **Note:** Prefinished CRP-10191, CRP-10318, CRP-10334 designs in specific specie and finish combinations will receive the Wood Conditioner Option unless instructed not to by customer.
Mullions/Frame Only	
pgs 6.1-6.13	All designs - available in frame only and mullions. CRP-10 Miter mullion incurs standard lite charges. All other mullion designs incur special lite charges.
Matching/Complementary Drawer Fronts	
pgs 4.28-4.29, 4.62-4.63	All available.

Miter Raised Panel Doors



CRP-10875
matching drawer front available

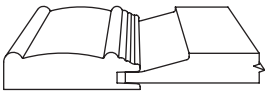

8-5/8" x 8-5/8"
2-7/8" framing
Slant raise shown



CRP-10946
matching drawer front available

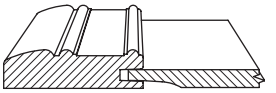

8" x 8"
2-15/16" framing
3/8" Reverse G-Cove raise shown



CRP-1389
matching drawer front available

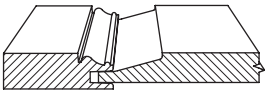

7-1/2" x 7-1/2"
2-5/16" framing
Slant raise shown

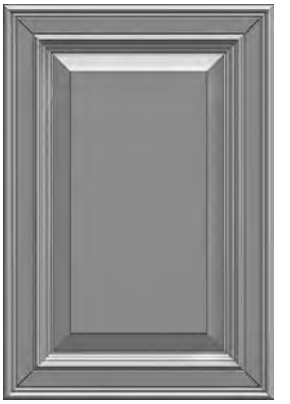

CRP-1420
matching drawer front available

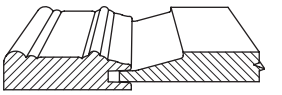

8-1/4" x 8-1/4"
2-11/16" framing
Slant raise shown



Presidential Miter
matching drawer front available

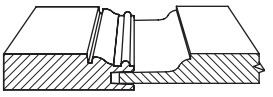

7-7/8" x 7-7/8"
2-1/2" framing
Presidential raise shown



Prestige
matching drawer front available

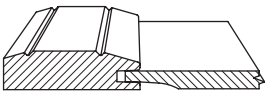

7-7/8" x 7-7/8"
2-7/8" framing
3/8" Reverse G-Cove raise shown



Rothsford
matching drawer front available

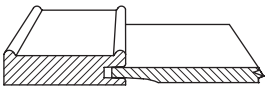

7-3/4" x 7-3/4"
2-3/4" framing
3/8" Reverse G-Cove raise shown

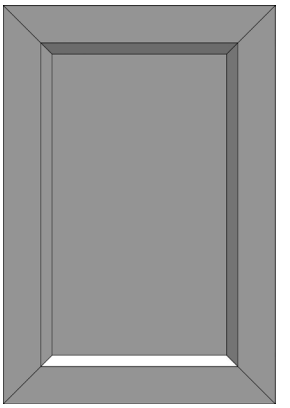

Rutland
matching drawer front available

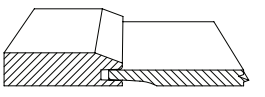

7-1/2" x 7-1/2"
2-11/16" framing
3/8" Reverse G-Cove raise shown

Due to construction complexity, all multiple panel miter doors will include an additional charge per middle and upright rail plus the per-panel Design Charge. Vertical grain direction standard unless otherwise noted; horizontal grain available upon request. Minimums listed are based on panel raise shown and will vary by raise; see Offering and Availability for additional options. Framing width listed is determined by measuring across the back of the framing unless otherwise noted.

Offering And Availability

All Conestoga products are available in a wide variety of specifications to satisfy your custom needs. The information below indicates any exceptions or limitations pertaining to the designs on the previous page. For a detailed listing of a particular product specification, refer to the page indicated.

Species	
Material Pricing Guide	Rothsford - All 3/4" species available except Bamboo, Rift Cut Red Oak, Rift Cut White Oak and Rustic Knotty. All other designs – all 3/4" species available except Rift Cut Red Oak and Rustic Knotty.
Edge Profiles	
pg 7.1	CRP-1389, Presidential Miter and Rutland – all 3/4" profiles available. All other designs – design specific, no options available.
Framing Beads	
pg 7.2	All designs – design specific, no options available.
Panel Raises	
pg 7.2A	All designs – all 3/4" profiles available.
Options	
pgs 7.3-7.15	All designs – back-routed hand pull, sample ID label, distressing, G-012, G-015 and G-056 panel grooves and wear sanding. All designs except CRP-1389 and Presidential Miter – all concealed hinge boring patterns available. CRP-1389 and Presidential Miter – pattern A concealed hinge boring only. CRP-10875, CRP-1389, CRP-1420, Presidential Miter, Rothsford and Rutland - Soss rout also available. **Note:** Prefinished CRP-10875, CRP-10946, CRP-1420, Prestige and Rothsford designs in specific specie and finish combinations will receive the Wood Conditioner Option unless instructed not to by customer.
Mullions/Frame Only	
pgs 6.1-6.13	All designs - available in frame only and mullions. All mullion designs incur special lite charges.
Matching/Complementary Drawer Fronts	
pgs 4.28-4.31, 4.62-4.63	All available.

Miter Raised Panel Doors

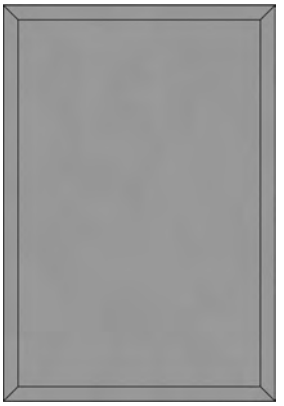

Venus
matching drawer front available

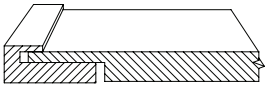

5-1/4" x 5-1/4"
13/16" wide framing on face
25/32" thick framing



Woodhull
matching drawer front available

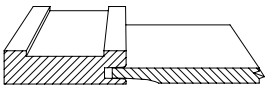

7-3/4" x 7-3/4"
2-3/4" framing
3/8" Reverse G-Cove shown

Due to construction complexity, all multiple panel miter doors will include an additional charge per middle and upright rail plus the per-panel Design Charge. Vertical grain direction standard unless otherwise noted; horizontal grain available upon request. Minimums listed are based on panel raise shown and will vary by raise; see Offering and Availability for additional options. Framing width listed is determined by measuring across the back of the framing unless otherwise noted.

Offering And Availability

All Conestoga products are available in a wide variety of specifications to satisfy your custom needs. The information below indicates any exceptions or limitations pertaining to the designs on the previous page. For a detailed listing of a particular product specification, refer to the page indicated.

Species	
Material Pricing Guide	Venus - all 3/4" species available except Bamboo, Paint Grade and Rustic Knotty and all 1" species available except Rustic Knotty. 1" species must be ordered as VENUS78. Woodhull – all 3/4" species available except Bamboo, Rift Cut Red Oak, Rift Cut White Oak and Rustic Knotty.
Edge Profiles	
pg 7.1	Venus - B-2, L-034, L-149, L-253, L-686, L-1160, Machine Edge and V-2 only. Woodhull – design specific, no options available.
Framing Beads	
pg 7.2	Venus and Woodhull – design specific, no options available.
Panel Raises	
pg 7.2A	Venus – design specific, no options available. Woodhull – all 3/4" profiles available.
Options	
pgs 7.3-7.15	Venus – concealed hinge boring, panel grooves, back-routed hand pull, sample ID label, antiquing, weathered grain, distressing, G-012, G-015, G-056 panel grooves, wear sanding and hybrid seal coat. Woodhull – back-routed hand pull, sample ID label, distressing, G-012, G-015, G-056 panel grooves, wear sanding, concealed hinge boring and Soss hinge rout. **Note:** Prefinished Woodhull design in specific specie and finish combinations will recieve the Wood Conditioner Option unless instructed not to by the customer. Truetone finishes not available.
Mullions/Frame Only	
pgs 6.1-6.13	Venus - available in frame only and mullions in all eligible species. Multi-panel frame only doors not available. Woodhull – available in frame only and mullions. **Note:** Venus framing width on the face of the frame only door is 2-1/2".

Miter Plywood Slab Doors (1" Thick)



AspenPP
matching drawer front available

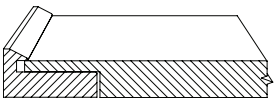

5-1/4" x 5-1/4"
1/2" wide framing
on face
1" thick framing
3/4" Veneered panel

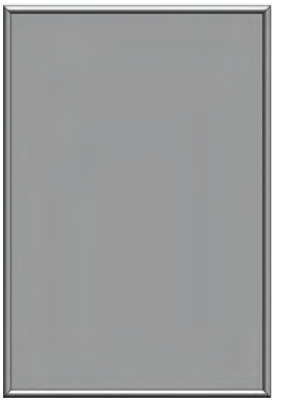

BoulderPP
matching drawer front available

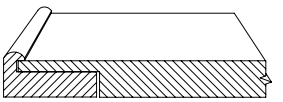

5-1/4" x 5-1/4"
7/16" wide framing
on face
15/16" thick framing
3/4" Veneered panel



FargoPP
matching drawer front available

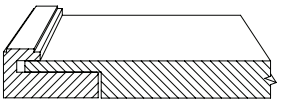

5-1/4" x 5-1/4"
13/16" wide framing on
face
1" thick framing
3/4" Veneered panel



OmahaPP
matching drawer front available

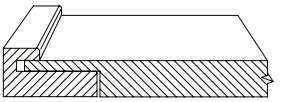

5-1/4" x 5-1/4"
3/4" wide framing
on face
1" thick framing
3/4" Veneered panel



TopekaPP
matching drawer front available

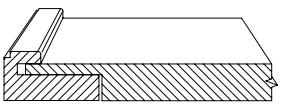

5-1/4" x 5-1/4"
3/4" wide framing
on face
1" thick framing
3/4" Veneered panel

All plywood panel designs use a veneered, composite core panel. All plywood panels except Red and White Birch, Quarter Sawn White Oak and Rift Cut Red and White Oak use a plain sliced or half round face and plain sliced or rotary back veneer. Red and White Birch use a rotary face and back. Quarter Sawn White Oak uses a quarter sawn face and plain sliced back. 3/4" thick Rift Cut Red and White Oak panels use rift cut on face and back. All other rift cut plywood use rift cut veneer on face, plain slice on back. Vertical grain direction standard unless otherwise noted; horizontal grain available upon request. Framing width listed is determined by measuring across the back of the framing unless otherwise noted.

Offering And Availability

All Conestoga products are available in a wide variety of specifications to satisfy your custom needs. The information below indicates any exceptions or limitations pertaining to the designs on the previous page. For a detailed listing of a particular product specification, refer to the page indicated.

Species	
Material Pricing Guide	All designs – 1" Cherry, Hard Maple, Paint Grade Hard Maple Hybrid, Rift Cut Red Oak, Rift Cut White Oak and Walnut – see chart below for pricing.
Edge Profiles	
pg 7.1	All designs – design specific, no options available.
Framing Beads	
pg 7.2	All designs – design specific, no options available.
Panel Raises	
pg 7.2A	All designs have 3/4" veneered panel, except PGHM Hybrid which is a 3/4" MDF panel.
Options	
pgs 7.3-7.15	All designs - concealed hinge boring, sample ID label, antiquing, distressing, G-012, G-015, G-056 panel grooves, and wear sanding.
Mullions/Frame Only	
pgs 6.1-6.13	All designs - available in frame only and mullions. See pricing chart below. Multi-panel frame only doors not available. **Note:** The overall framing width on the face of the frame only door is 2-1/2".
Matching/Complementary Drawer Fronts	
pgs 4.32-4.33	All available.

Material Charges			
Specie	**Price**	**Specie**	**Price**
Cherry		Oak, White, Rift Cut	
Maple, Hard		PGHM Hybrid	
Oak, Red, Rift Cut		Walnut	

Miter Plywood Panel Doors

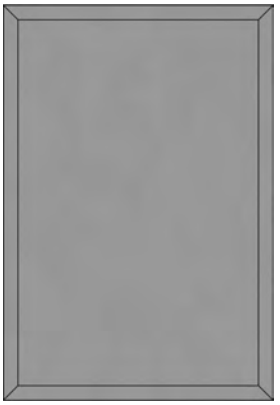

Juno
matching drawer front available

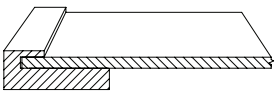

5-1/4" x 5-1/4"
13/16" wide framing on face
25/32" thick
1/4" Veneered panel



Presidential MiterPP

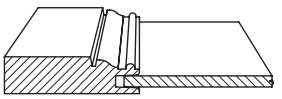

5-3/8" x 5-3/8"
2-1/2" framing
1/4" Veneered panel

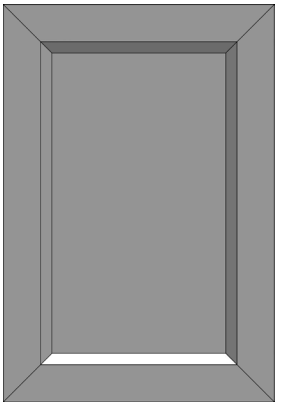

RutlandPP
matching drawer front available

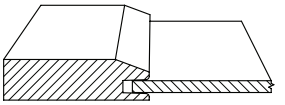

6-3/8" x 6-3/8"
2-11/16" framing
1/4" Veneered panel



TW-10 Miter

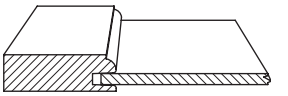

5" x 5"
2-5/16" framing
1/4" Veneered panel



TW-10533

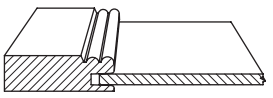

5" x 5"
2-5/16" framing
1/4" Veneered panel



TW-10751

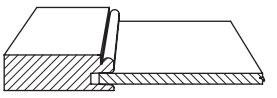

5" x 5"
2-5/16" framing
1/4" Veneered panel



TW-10827

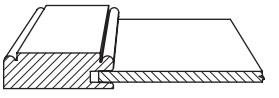

5" x 5"
2-5/16" framing
1/4" Veneered panel

Due to construction complexity, all multiple panel miter doors will include an additional charge per middle and upright rail plus the per-panel Design Charge. All plywood panel designs use a veneered, composite core panel. All plywood panels except Red and White Birch, Quarter Sawn White Oak and Rift Cut Red and White Oak use a plain sliced or half round face and plain sliced or rotary back veneer. Red and White Birch use a rotary face and back. Quarter Sawn White Oak uses a quarter sawn face and plain sliced back. Rift Cut Red Oak uses a rift cut on face and back. Rift Cut White Oak uses a rift cut face and plain sliced back. Vertical grain direction standard unless otherwise noted; horizontal grain available upon request. Framing width listed is determined by measuring across the back of the framing unless otherwise noted.

Offering And Availability

All Conestoga products are available in a wide variety of specifications to satisfy your custom needs. The information below indicates any exceptions or limitations pertaining to the designs on the previous page. For a detailed listing of a particular product specification, refer to the page indicated.

Species	
Material Pricing Guide	Juno – 3/4" Cherry, Hard Maple, Paint Grade Hard Maple Hybrid, Red Oak, Rift Cut Red Oak, Rift Cut White Oak and Walnut. Presidential MiterPP, RutlandPP, TW-10 Miter, TW-10533, TW-10751 and TW-10827 – all 3/4" species available except Rift Cut Red Oak, Rustic Knotty and Soft Maple. TW-10 Miter – all 1" species available except Rift Cut Red Oak, Rustic Knotty and Soft Maple.
Edge Profiles	
pg 7.1	Juno – B-2, L-034, L-149, L-253, L-686, L-1160, Machine Edge and V-2 only. TW-10827 – design specific, no options available. TW-10 – all 3/4" and 1" profiles available. All other designs – all 3/4" profiles available.
Framing Beads	
pg 7.2	TW-10 Miter – all available. All other designs – design specific, no options available.
Panel Raises	
pg 7.2A	All designs – 1/4" veneered panel only, except PGHM Hybrid, which is a MDF panel.
Options	
pgs 7.3-7.15	Juno – concealed hinge boring, back-routed hand pull, sample ID label, antiquing, weathered grain, distressing, G-012, G-015, G-056 panel grooves and wear sanding. All other designs – concealed hinge boring, back-routed hand pull, sample ID label, distressing, G-012, G-015, G-056 panel grooves and wear sanding. All designs – Soss hinge boring available except TW-10827. No hinge rout patterns B & C on Presidential MiterPP.
Mullions/Frame Only	
pgs 6.1-6.13	Juno – available in frame only and mullions in all eligible species. Multi-panel frame only doors not available. All other designs – available in frame only and mullions, mullions incur special lite charges except TW-10 Miter. **Note:** Juno framing width on the face of the frame only door is 2-1/2".
Matching/Complementary Drawer Fronts	
pgs 4.30-4.31, 4.62-4.63	Matching drawer fronts available for Juno and RutlandPP.

Miter Drawer Fronts



CRP-10 Miter

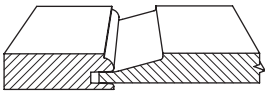

7-1/2" x 7-1/2"
2-5/16" framing
Slant raise shown



CRP-10191

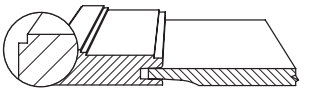

5-1/2" x 5-1/8"
1-1/2" framing
3/8" Reverse G-Cove shown



CRP-10318

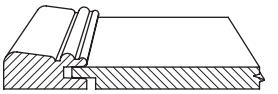

4-3/4" x 4-3/4"
1-3/4" framing
P-057 raise shown



CRP-10334

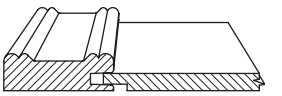

4-7/8" x 4-7/8"
2" framing
P-057 raise shown



CRP-10382

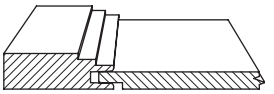

5-1/2" x 5-1/2"
2-5/16" framing
P-057 raise shown



CRP-10533

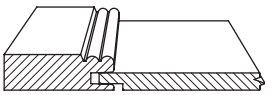

5-1/2" x 5-1/2"
2-5/16" framing
P-057 raise shown



CRP-10751

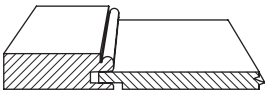

5-1/2" x 5-1/2"
2-5/16" framing
P-057 raise shown



CRP-10827

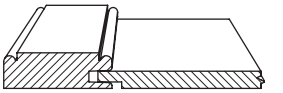

5-1/2" x 5-1/2"
2-5/16" framing
P-057 raise shown



CRP-10875

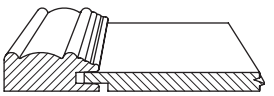

4-7/8" x 4-7/8"
2" framing
P-057 raise shown



CRP-10946

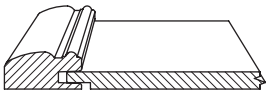

4-3/4" x 4-3/4"
1-5/8" framing
P-057 raise shown



CRP-1389

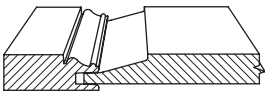

6-7/8" x 6-7/8"
2" framing
Slant raise shown

Horizontal grain direction standard unless otherwise noted; vertical grain available upon request. Minimums listed are based on panel raise shown and will vary by raise; see Offering and Availability for additional options. Framing width listed is determined by measuring across the back of the framing unless otherwise noted.

Offering And Availability

All Conestoga products are available in a wide variety of specifications to satisfy your custom needs. The information below indicates any exceptions or limitations pertaining to the designs on the previous page. For a detailed listing of a particular product specification, refer to the page indicated.

Species	
Material Pricing Guide	CRP-10 Miter, CRP-10318, CRP-10334, CRP-10382, CRP-10533, CRP-10751, CRP-10827, CRP-10875, CRP-10946 and CRP-1389 – all 3/4" species available except Rift Cut Red Oak and Rustic Knotty. CRP-10191 – all 3/4" species available except Bamboo, Rift Cut Red Oak and Rustic Knotty. CRP-10 Miter – all 1" species available except Bamboo, Rift Cut Red Oak and Rustic Knotty.
Edge Profiles	
pg 7.1	CRP-10191, CRP-10334, CRP-10827, CRP-10875 and CRP-10946 – design specific, no options available. CRP-10318 – standard as shown, C-2, LC-2, PRS-2 also available. CRP-1389 – all 3/4" profiles available except B and C. All other designs – all 3/4" profiles available.
Framing Beads	
pg 7.2	CRP-10 Miter – all 3/4" and 1" profiles available. All other designs – design specific, no options available.
Panel Raises	
pg 7.2A	All designs – all 3/4" profiles available. CRP-10 Miter – all 3/4" and 1" profiles available.
Options	
pgs 7.3-7.15	All designs – back-routed hand pull, sample ID label, G-012, G-015 and G-056 panel grooves, distressing and wear sanding. **Note:** Prefinished CRP-10191, CRP-10318, CRP-10334, CRP-10875 and CRP-10946 designs in specific specie and finish combinations will receive the Wood Conditioner Option unless instructed not to by customer.

CONESTOGA™ WOOD SPECIALTIES

Miter Drawer Fronts



CRP-1420

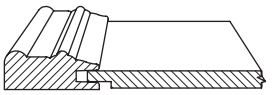

4-7/8" x 4-7/8"
2" framing
P-057 raise shown



Presidential Miter

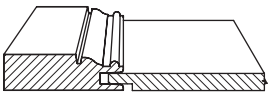

5-7/8" x 5-7/8"
2-1/2" framing
P-057 raise shown



Prestige

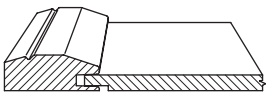

4-7/8" x 4-7/8"
2" framing
P-057 raise shown



Rothsford

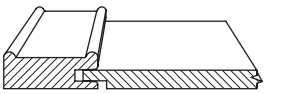

4-7/8" x 4-7/8"
2" framing
P-057 raise shown



Rutland

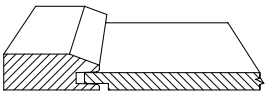

5" x 5"
2-1/16" framing
P-057 raise shown



RutlandPP

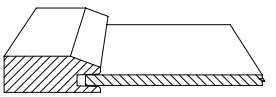

5" x 5"
2-1/16" framing
1/4" Veneered Panel



Juno

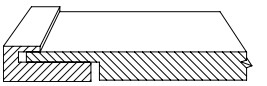

5-1/4" x 4-7/8"
13/16" wide framing on face
25/32" thick framing
9/16" Veneered panel



Venus

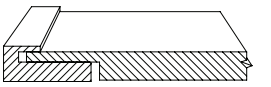

5-1/4" x 4-7/8"
13/16" wide framing on face
25/32" thick framing



Woodhull

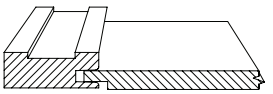

4-7/8" x 4-7/8"
2" framing
P-057 raise shown

All plywood panel designs use a veneered, composite core panel. All plywood panels except Red and White Birch, Quarter Sawn White Oak and Rift Cut Red and White Oak use a plain sliced or half round face and plain sliced or rotary back veneer. Red and White Birch use a rotary face and back. Quarter Sawn White Oak uses a quarter sawn face and plain sliced back. Rift Cut Red Oak uses a rift cut on face and back. Rift Cut White Oak uses a rift cut face and plain sliced back. Horizontal grain direction standard unless otherwise noted; vertical grain available upon request. Minimums listed are based on panel raise shown and will vary by raise; see Offering and Availability for additional options. Framing width listed is determined by measuring across the back of the framing unless otherwise noted.

Offering And Availability

All Conestoga products are available in a wide variety of specifications to satisfy your custom needs. The information below indicates any exceptions or limitations pertaining to the designs on the previous page. For a detailed listing of a particular product specification, refer to the page indicated.

Species	
Material Pricing Guide	CRP-1420, Presidential Miter and Prestige – all 3/4" species available except Rift Cut Red Oak and Rustic Knotty. Juno – 3/4" Cherry, Hard Maple, Paint Grade Hard Maple Hybrid, Red Oak, Rift Cut Red Oak, Rift Cut White Oak and Walnut. Rothsford – all 3/4" species available except Rift Cut Red Oak, Rift Cut White Oak and Rustic Knotty. Rutland and Woodhull – all 3/4" species available except Bamboo, Rift Cut Red Oak, Rift Cut White Oak and Rustic Knotty. RutlandPP – all 3/4" species available except Bamboo, Rift Cut Red Oak, Rift Cut White Oak, Rustic Knotty and Soft Maple. Venus - all 3/4" species available except Bamboo, Paint Grade and Rustic Knotty and all 1" species available except Rustic Knotty. 1" species must be ordered as VENUS78.
Edge Profiles	
pg 7.1	CRP-1420, Prestige, Rothsford and Woodhull – design specific, no options available. Juno and Venus – B-2, L-034, L-149, L-253, L-686, L-1160, Machine Edge and V-2 only. All other designs – all 3/4" profiles available.
Framing Beads	
pg 7.2	All designs – design specific, no options available.
Panel Raises	
pg 7.2A	Juno – 9/16" veneered panel, except PGHM Hybrid which is an 5/8" MDF panel. RutlandPP – 1/4" veneered panel only. Venus - design specific, no options available. All other designs – all 3/4" profiles available.
Options	
pgs 7.3-7.15	Juno and Venus - back-routed hand pull, sample ID label, antiquing, weathered grain, distressing, G-012, G-015, G-056 panel grooves, and wear sanding. All other designs – back-routed hand pull, sample ID label, G-012, G-015 and G-056 panel grooves, distressing and wear sanding. **Note:** Prefinished CRP-1420, Prestige, Rothsford and Woodhull designs in specific specie and finish combinations will receive the Wood Conditioner Option unless instructed not to by customer. Woodhull not available with Truetone finishes.

Miter Drawer Fronts



AspenPP

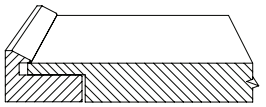

4-3/4" x 4-3/4"
1/2" wide framing
on face
1" thick framing
3/4" Veneered panel



BoulderPP

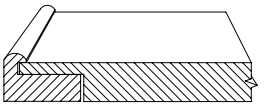

4-3/4" x 4-3/4"
7/16" wide framing
on face
15/16" thick framing
3/4" Veneered panel



FargoPP

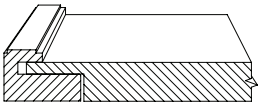

4-3/4" x 4-3/4"
13/16" wide framing on
face
1" thick framing
3/4" Veneered panel



OmahaPP

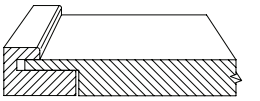

4-3/4" x 4-3/4"
3/4" wide framing
on face
1" thick framing
3/4" Veneered panel



TopekaPP

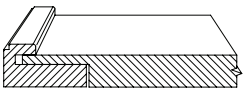

4-3/4" x 4-3/4"
3/4" wide framing
on face
1" thick framing
3/4" Veneered panel

All plywood panel designs use a veneered, composite core panel. All plywood panels except Red and White Birch, Quarter Sawn White Oak and Rift Cut Red and White Oak use a plain sliced or half round face and plain sliced or rotary back veneer. Red and White Birch use a rotary face and back. Quarter Sawn White Oak uses a quarter sawn face and plain sliced back. 3/4" thick Rift Cut Red and White Oak panels use rift cut on face and back. Horizontal grain direction standard unless otherwise noted; verticle grain available upon request. Minimums listed are based on panel raise shown and will vary by raise; see Offering and availability for additional options. Framing width listed is determined by measuring across the back of the framing unless otherwise noted.

Offering And Availability

All Conestoga products are available in a wide variety of specifications to satisfy your custom needs. The information below indicates any exceptions or limitations pertaining to the designs on the previous page. For a detailed listing of a particular product specification, refer to the page indicated.

Species	
Material Pricing Guide	All designs – 1" Cherry, Hard Maple, Paint Grade Hard Maple Hybrid, Rift Cut Red Oak, Rift Cut White Oak and Walnut – see chart below for pricing.
Edge Profiles	
pg 7.1	All designs – design specific, no options available.
Framing Beads	
pg 7.2	All designs – design specific, no options available.
Panel Raises	
pg 7.2A	All designs have 3/4" veneered panel, except PGHM Hybrid which is a MDF panel.
Options	
pgs 7.3-7.15	All designs – sample ID label, antiquing, distressing, G-012, G-015, G-056 panel grooves and wear sanding.

Material Charges			
Specie	**Price**	**Specie**	**Price**
Cherry		Oak, White, Rift Cut	
Maple, Hard		PGHM Hybrid	
Oak, Red, Rift Cut		Walnut	

Applied Moulding Doors



CRP-10A48
matching drawer front available

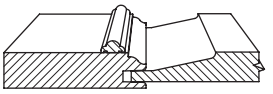

9-3/8" x 9-3/8"
3" framing
P-008 raise shown



CRP-10161
matching drawer front available

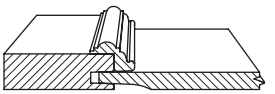

7" x 6-3/4"
2-1/4" framing
3/8" Reverse G-Cove raise shown



CRP-101728
matching drawer front available

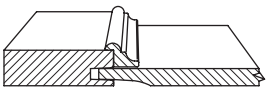

7" x 6-3/4"
2-1/4" framing
3/8" Reverse G-Cove raise shown



CRP-10797
matching drawer front available

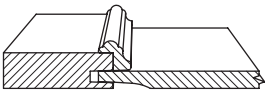

7" x 6-3/4"
2-1/4" framing
3/8" Reverse G-Cove raise shown



LaSalle
matching drawer front available

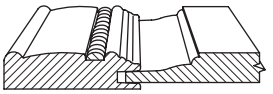

8-5/8" x 8-5/8"
2-7/8" framing
M-Bead raise shown



Marquis
matching drawer front available

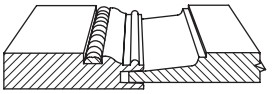

8-7/8" x 8-7/8"
2-15/16" framing
Louis XIII raise shown



Radcliffe
matching drawer front available

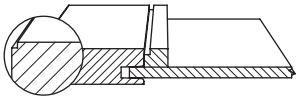

7-1/4" x 7-1/4"
2-1/4" framing
1/4" Veneered panel

Due to construction complexity, all multiple panel miter doors include an additional charge per middle and upright rail plus the per-panel Design Charge. All plywood panel designs use a veneered, composite core panel. All plywood panels except Red and White Birch, Quarter Sawn White Oak and Rift Cut Red and White Oak use a plain sliced or half round face and plain sliced or rotary back veneer. Red and White Birch use a rotary face and back. Quarter Sawn White Oak uses a quarter sawn face and plain sliced back. Rift Cut Red Oak uses a rift cut on face and back. Rift Cut White Oak uses a rift cut face and plain sliced back. Vertical grain direction standard unless otherwise noted; horizontal grain available upon request. Minimums listed are based on panel raise shown and will vary by raise; see Offering and Availability for additional options. Framing width listed is determined by measuring across the back of the framing unless otherwise noted.

Offering And Availability

All Conestoga products are available in a wide variety of specifications to satisfy your custom needs. The information below indicates any exceptions or limitations pertaining to the designs on the previous page. For a detailed listing of a particular product specification, refer to the page indicated.

Species	
Material Pricing Guide	LaSalle and Marquis – 3/4" Alder, Cherry, Hard Maple, Paint Grade Hard Maple, Red Oak and Soft Maple only. Alder and Cherry utilize Cherry Rope moulding. Hard Maple, Paint Grade Hard Maple and Soft Maple utilize Hard Maple Rope moulding. Red Oak utilizes Red Oak Rope moulding. Radcliffe – 3/4" Cherry, Hard Maple, Paint Grade Hard Maple Hybrid, Quarter Sawn White Oak, Red Oak, Rift Cut Red Oak, Rift Cut White Oak and White Oak only. All other designs – all 3/4" species available. **Note:** Applied moulding designs produced in Quarter Sawn White Oak, Rift Cut Red Oak and Rift Cut White Oak utilize Standard grade applied mouldings and may contain small cathedrals, angled grain or other characteristics of flat cut Red and White Oak lumber, which are considered acceptable.
Edge Profiles	
pg 7.1	LaSalle – design specific, no options available. Radcliffe – standard as shown (L-966), all other 3/4" profiles available. All other designs all 3/4" profiles available.
Framing Beads	
pg 7.2	CRP-10A48 – all 3/4" profiles available. All other designs – design specific, no options available.
Panel Raises	
pg 7.2A	CRP-10A48, LaSalle and Marquis – all 3/4" profiles available. CRP-10161 and CRP-101728 – P-057, P-602, Presidential and Reverse G-Cove only. CRP-10797 – M-Bead, P-057, P-602, Presidential, Reverse G-Cove and RM only. Radcliffe – 1/4" veneered panel only.
Options	
pgs 7.3-7.15	LaSalle and Marquis – all available except pegs, Essex Rout and radius corners. All other designs – all options available except Essex Rout.
Mullions/Frame Only	
pgs 6.1-6.13	All designs – available in frame only and mullions. All mullion designs except CRP-10A48 incur special lite charges.
Matching/Complementary Drawer Fronts	
pgs 4.38-4.39, 4.62-4.63	All available.

M&T Applied Moulding Doors



Ridgemont
matching drawer front available

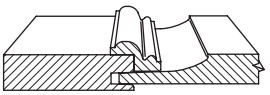

9" x 9"
2-3/4" framing
P-602 raise shown



Verona
matching drawer front available

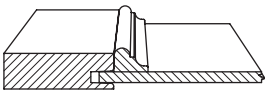

7-1/4" x 7-1/4"
2-1/4" framing
1/4" Veneered panel



Wayland
matching drawer front available

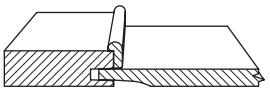

7" x 6-3/4"
2-1/4" framing
3/8" Reverse G-Cove raise shown

All plywood panel designs use a veneered, composite core panel. All plywood panels except Red and White Birch, Quarter Sawn White Oak and Rift Cut Red and White Oak use a plain sliced or half round face and plain sliced or rotary back veneer. Red and White Birch use a rotary face and back. Quarter Sawn White Oak uses a quarter sawn face and plain sliced back. Rift Cut Red Oak uses a rift cut on face and back. Rift Cut White Oak uses a rift cut face and plain sliced back. Vertical grain direction standard unless otherwise noted; horizontal grain available upon request. Minimums listed are based on panel raise shown and will vary by raise; see Offering and Availability for additional options. Framing width listed is determined by measuring across the back of the framing unless otherwise noted.

Offering And Availability

All Conestoga products are available in a wide variety of specifications to satisfy your custom needs. The information below indicates any exceptions or limitations pertaining to the designs on the previous page. For a detailed listing of a particular product specification, refer to the page indicated.

Species	
Material Pricing Guide	Ridgemont and Wayland – all 3/4" species available. Verona – all 3/4" species available except Rustic Knotty and Soft Maple. **Note:** Applied moulding designs produced in Quarter Sawn White Oak, Rift Cut Red Oak and Rift Cut White Oak utilize Standard grade applied mouldings and may contain small cathedrals, angled grain or other characteristics of flat cut Red and White Oak lumber, which are considered acceptable.
Edge Profiles	
pg 7.1	All designs – all 3/4" profiles available.
Framing Beads	
pg 7.2	All designs – design specific, no options available. **Note:** Verona – applied moulding is installed against the framing bead, but does not overlap. This construction can result in a black line between the framing bead and applied moulding when using painted finishes and is not considered a defect. To avoid this potential issue, order the TW-101728 when utilizing a painted finish.
Panel Raises	
pg 7.2A	Verona – 1/4" veneered panel only. Ridgemont – P-057, P-602 and Reverse G-Cove only. Wayland – P-057, P-602, M-Bead, Presidential, Reverse G-Cove and RM only.
Options	
pgs 7.3-7.15	All options available.
Mullions/Frame Only	
pgs 6.1-6.13	All designs available in frame only and mullions except Verona. For Verona frame only or mullion design, order as CRP-101728 with 2-7/16" framing. Ridgemont mullion – incurs special lite charges. Wayland mullion – incurs standard lite charges.
Matching/Complementary Drawer Fronts	
pgs 4.38-4.39, 4.62-4.63	All available.

Applied Moulding Drawer Fronts



CRP-10A48

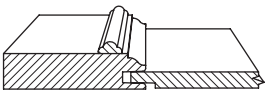

8-3/8" x 4-7/8"
2" rails
3" stiles
P-057 raise shown



CRP-10161

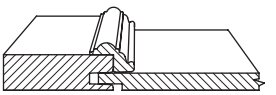

7" x 4-1/8"
1-1/2" rails
2-1/4" stiles
P-057 raise shown



CRP-101728

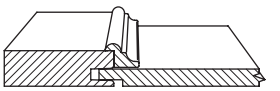

7" x 4-1/2"
1-1/2" rails
2-1/4" stiles
P-057 raise shown



CRP-10797

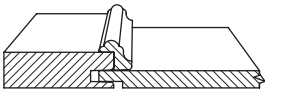

7" x 4"
1-1/2" rails
2-1/4" stiles
P-057 raise shown



LaSalle

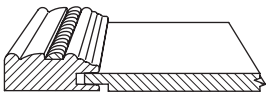

4-7/8" x 4-7/8"
2" framing
P-057 raise shown



Marquis

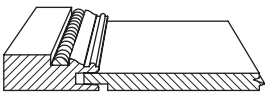

4-7/8" x 4-7/8"
2" framing
P-057 raise shown



Radcliffe

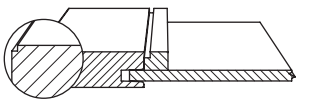

7-1/4" x 5-5/8"
1-1/2" rails
2-1/4" stiles
1/4" Veneered panel



Ridgemont

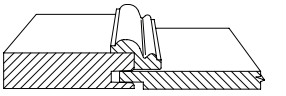

7-7/8" x 4-3/4"
1-1/2" rails
2-3/4" stiles
P-057 raise shown



Verona

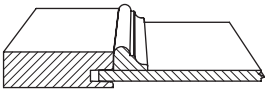

7-1/4" x 5-5/8"
1-1/2" rails
2-1/4" stiles
1/4" Veneered panel



Wayland

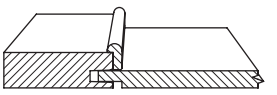

7" x 4"
1-1/2" rails
2-1/4" stiles
P-057 raise shown

All plywood panel designs use a veneered, composite core panel. All plywood panels except Red and White Birch, Quarter Sawn White Oak and Rift Cut Red and White Oak use a plain sliced or half round face and plain sliced or rotary back veneer. Red and White Birch use a rotary face and back. Quarter Sawn White Oak uses a quarter sawn face and plain sliced back. Rift Cut Red Oak uses a rift cut on face and back. Rift Cut White Oak uses a rift cut face and plain sliced back. Horizontal grain direction standard unless otherwise noted; vertical grain available upon request. Minimums listed are based on panel raise shown and will vary by raise; see Offering and Availability for additional options. Framing width listed is determined by measuring across the back of the framing unless otherwise noted.

Offering And Availability

All Conestoga products are available in a wide variety of specifications to satisfy your custom needs. The information below indicates any exceptions or limitations pertaining to the designs on the previous page. For a detailed listing of a particular product specification, refer to the page indicated.

Species	
Material Pricing Guide	LaSalle and Marquis – 3/4" Alder, Cherry, Hard Maple, Paint Grade Hard Maple, Red Oak and Soft Maple only. Alder and Cherry utilize Cherry Rope moulding. Hard Maple, Paint Grade Hard Maple and Soft Maple utilize Hard Maple Rope moulding. Red Oak utilize Red Oak Rope moulding. Radcliffe – 3/4" Cherry, Hard Maple, Paint Grade Hard Maple Hybrid, Quarter Sawn White Oak, Red Oak, Rift Cut Red Oak, Rift Cut White Oak and White Oak only. Verona – all 3/4" species available except Rustic Knotty and Soft Maple. All other designs – all 3/4" species available. **Note:** Applied moulding designs produced in Quarter Sawn White Oak, Rift Cut Red Oak and Rift Cut White Oak utilize Standard grade applied mouldings and may contain small cathedrals, angled grain or other characteristics of flat cut Red and White Oak lumber, which are considered acceptable.
Edge Profiles	
pg 7.1	LaSalle – design specific, no options available. Radcliffe – standard as shown (L-966), all other 3/4" profiles available. All other designs – all 3/4" profiles available. CRP-10A48 – all 1" profiles available.
Framing Beads	
pg 7.2	CRP-10A48 – all 3/4" and 1" profiles available. All other designs – design specific, no options available.
Panel Raises	
pg 7.2A	CRP-10161 – design specific, no options available. CRP-10A48 – all 3/4" and 1" profiles available. CRP-101728 – P-057, P-602, Presidential and Reverse G-Cove only. CRP-10797 – P-057, M-Bead, Presidential, Reverse G-Cove and RM only. LaSalle and Marquis – all 3/4" profiles available. Radcliffe and Verona – 1/4" plywood panel only. Ridgemont – P-057, P-602 and Reverse G-Cove only. Wayland – P-057, P-602, M-Bead, Presidential, Reverse G-Cove and RM only.
Options	
pgs 7.3-7.15	LaSalle – back-routed hand pull and sample ID label only. Marquis – G-012, G-056 panel groves, radius corners, distressing, wear sanding, sample ID label and back-routed hand pull. All other designs – back-routed hand pull, sample ID label, distressing, G-012 G-015 and G-056 panel grooves, pegs, radius corners and wear sanding. **Note:** Verona – applied moulding is installed against the framing bead, but does not overlap. This construction can result in a black line between the framing bead and applied moulding when using painted finishes and is not considered a defect. To avoid this potential issue, order the TW-101728 when utilizing a painted finish. Prefinished LaSalle drawer front in specific specie and finish combinations will receive the Wood Conditioner Option unless instructed not to by customer.

Applied Moulding – Plywood Slab Doors



Aspen
matching drawer front available



4" x 4"
1/2" wide moulding
on face
1" thick moulding
3/4" Veneered panel



Boulder
matching drawer front available



4" x 4"
7/16" wide moulding on face
15/16" thick moulding
3/4" Veneered panel



Fargo
matching drawer front available

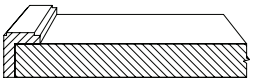

4" x 4"
13/16" wide moulding on face
1" thick moulding
3/4" Veneered panel



Omaha
matching drawer front available

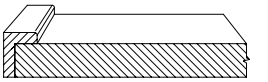

4" x 4"
3/4" wide moulding
on face
1" thick moulding
3/4" Veneered panel



Topeka
matching drawer front available



4" x 4"
3/4" wide moulding
on face
1" thick moulding
3/4" Veneered panel

All plywood panel designs use a veneered, composite core panel. All plywood panels except Red and White Birch, Quarter Sawn White Oak and Rift Cut Red and White Oak use a plain sliced or half round face and plain sliced or rotary back veneer. Red and White Birch use a rotary face and back. Quarter Sawn White Oak uses a quarter sawn face and plain sliced back. 3/4" thick Rift Cut Red and White Oak panels use rift cut on face and back. All other rift cut plywood uses rift cut veneer on face, plain slice on back. Vertical grain direction standard unless otherwise noted; horizontal grain available upon request.

Offering And Availability

All Conestoga products are available in a wide variety of specifications to satisfy your custom needs. The information below indicates any exceptions or limitations pertaining to the designs on the previous page. For a detailed listing of a particular product specification, refer to the page indicated.

Species	
Material Pricing Guide	All designs – 1" Cherry, Hard Maple, Paint Grade Hard Maple Hybrid, Rift Cut White Oak and Walnut – see chart below for pricing.
Edge Profiles	
pg 7.1	All designs – design specific, no options available.
Framing Beads	
pg 7.2	All designs – design specific, no options available.
Panel Raises	
pg 7.2A	All designs have 3/4" veneered panel, except PGHM Hybrid which is a 3/4" MDF panel.
Mullions/Frame Only	
pg 6.1-6.13	All designs – available in frame only and mullions. See pricing chart below. Because the frame only design uses drill & dowel construction, vertical joint lines are visible where rails intersect with stiles. **Note:** Paint Grade Hard Maple Hybrid utilizes #52, #906 or #907 glass retainer mouldings used on frame only door. Specify desired retainer moulding when ordering. **Note:** Frame only door pricing is calculated using list) Design Charge, plus the actual square footage of the door multiplied by the material square foot charge. In addition, the following retainer moulding upcharge must be added. A medium grey retainer moulding is automatically included (upcharge applies). The retainer moulding covers the raw substrate, eliminating the need to paint or mask visible substrate. 1.0 to 4.0 sq. ft. 4.01 to 7.0 sq. ft. 7.0 sq. ft. or larger 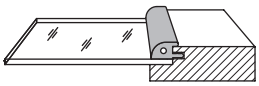 Retainer Moulding
Options	
pgs 7.3-7.15	All designs – concealed hinge boring, sample ID label, antiquing, distressing, G-012, G-015, G-056 panel grooves and wear sanding.
Matching/Complementary Drawer Fronts	
pgs 4.42-4.43, 4.62-4.63	All available.

Material Charges			
Specie	**Price**	**Specie**	**Price**
Cherry		PGHM Hybrid	
Maple, Hard		Walnut	
Oak, White, Rift Cut			

Applied Moulding – Plywood Slab Drawer Fronts



Aspen

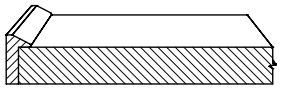

4" x 4"
1/2" wide moulding
on face
1" thick moulding
3/4" Veneered panel



Boulder

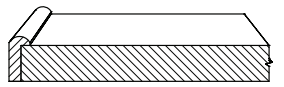

4" x 4"
7/16" wide moulding on face
15/16" thick moulding
3/4" Veneered panel



Fargo

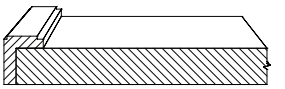

4" x 4"
13/16" wide moulding on face
1" thick moulding
3/4" Veneered panel



Hastings

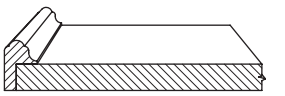

3-3/4" x 3-3/4"
11/16" wide moulding on face
1-1/16" thick moulding
9/16" Veneered panel



Omaha



4" x 4"
3/4" wide moulding
on face
1" thick moulding
3/4" Veneered panel



Rothbury

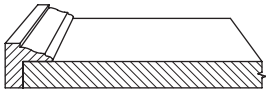

3-3/4" x 3-3/4"
1" wide moulding
on face
15/16" thick moulding
9/16" Veneered panel



Topeka

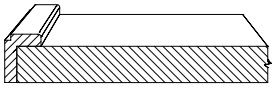

4" x 4"
3/4" wide moulding
on face
1" thick moulding
3/4" Veneered panel

All plywood panel designs use a veneered, composite core panel. All plywood panels except Red and White Birch, Quarter Sawn White Oak and Rift Cut Red and White Oak use a plain sliced or half round face and plain sliced or rotary back veneer. Red and White Birch use a rotary face and back. Quarter Sawn White Oak uses a quarter sawn face and plain sliced back. 3/4" thick Rift Cut Red and White Oak panels use rift cut on face and back. All other Rift Cut plywood uses rift cut veneer on face, plain slice on back. Horizontal grain direction standard unless otherwise noted; vertical grain available upon request.

Offering And Availability

All Conestoga products are available in a wide variety of specifications to satisfy your custom needs. The information below indicates any exceptions or limitations pertaining to the designs on the previous page. For a detailed listing of a particular product specification, refer to the page indicated.

Species	
Material Pricing Guide	Hastings and Rothbury available in 1" Cherry, Hard Maple, Red Oak and Walnut. Aspen, Boulder, Fargo, Omaha and Topeka available in 1" Cherry, Hard Maple, Paint Grade Hard Maple Hybrid, Rift Cut White Oak and Walnut. See chart below for pricing.
Edge Profiles	
pg 7.1	All designs – design specific, no options available.
Framing Beads	
pg 7.2	All designs – design specific, no options available.
Panel Raises	
pg 7.2A	Aspen, Boulder, Fargo, Omaha and Topeka drawer fronts have 3/4" veneered panel, except PGHM Hybrid which is an MDF panel. Hastings and Rothbury drawer fronts have 9/16" veneered panel.
Options	
pgs 7.3-7.15	Aspen, Boulder, Fargo, Omaha and Topeka – sample ID label, antiquing, distressing, G-012, G-015, G-056 panel grooves, wear sanding and hybrid seal coat. Hastings and Rothbury – sample ID label, distressing and End Grain Sealer.

Material Charges			
Specie	**Price**	**Specie**	**Price**
Cherry		Oak, White, Rift Cut	
Maple, Hard		PGHM Hybrid	
Oak, Red		Walnut	

CONESTOGA™ WOOD SPECIALTIES

M&T Shaker Doors

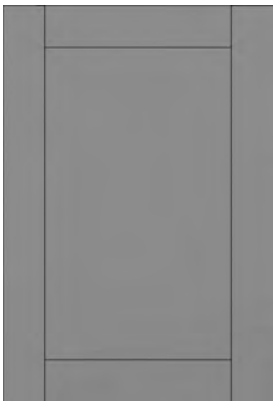

Albany
matching drawer front available

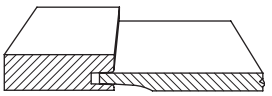

7" x 6-3/4"
2-1/4" framing
3/8" Reverse G-Cove raise shown

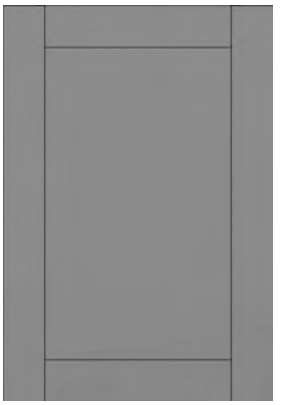

Amesbury
matching drawer front available

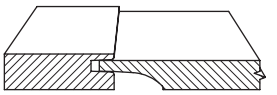

7-1/2" x 7-1/2"
2-1/4" framing
5/8" Reverse G-Cove raise shown



Bristol
matching drawer front available

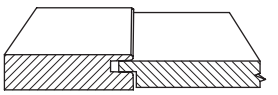

7-7/8" x 6-3/8"
2-3/4" framing
9/16" Veneered Panel
Essex Rout standard on stiles

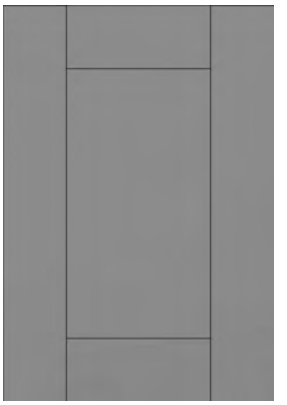

Cortland
matching drawer front available

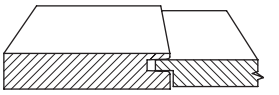

9-3/8" x 7-7/8"
3-1/2" framing
9/16" Veneered Panel



Fairhaven
matching drawer front available

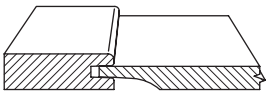

7-3/16" x 7-3/16"
2-1/4" framing
1/2" Reverse G-Cove raise shown
Joints have eased edges, creating the appearance of an open joint.



Madison*
matching drawer front available

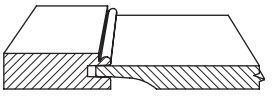

7-3/16" x 7-3/16"
2-5/16" framing
1/2" Reverse G-Cove raise shown

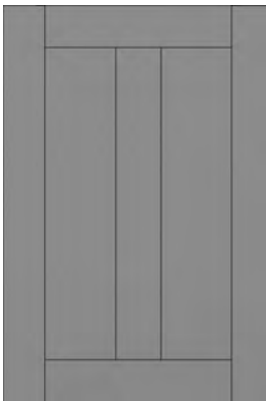

Sheldon
complementary drawer front available

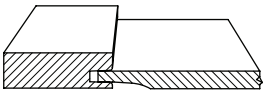

11-3/8" x 7"
2-1/4" framing
3/8" Reverse G-Cove raise shown

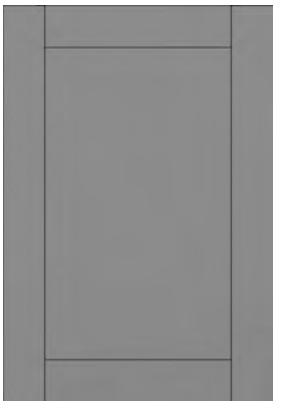

Stockbridge
matching drawer front available

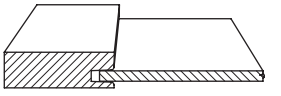

7" x 5"
2-1/4" framing
1/4" Veneered Panel

*Due to construction complexity, all multiple panel Madison doors include an additional chargeper middle and upright rail plus the per-panel Design Charge. All plywood panel designs use a veneered, composite core panel. All plywood panels except Red and White Birch, Quarter Sawn White Oak and Rift Cut Red and White Oak use a plain sliced or half round face and plain sliced or rotary back veneer. Red and White Birch use a rotary face and back. Quarter Sawn White Oak uses a quarter sawn face and plain sliced back. Rift Cut Red Oak uses a rift cut on face and back. Rift Cut White Oak uses a rift cut face and plain sliced back. Vertical grain direction standard unless otherwise noted; horizontal grain available upon request. Minimums listed are based on panel raise shown and will vary by raise; see Offering and Availability for additional options. Framing width listed is determined by measuring across the back of the framing unless otherwise noted.

Offering And Availability

All Conestoga products are available in a wide variety of specifications to satisfy your custom needs. The information below indicates any exceptions or limitations pertaining to the designs on the previous page. For a detailed listing of a particular product specification, refer to the page indicated.

Species	
Material Pricing Guide	Albany, Amesbury, Fairhaven and Sheldon – all 3/4" species available. Bristol and Cortland – 3/4" Cherry, Hard Maple, Paint Grade Hard Maple Hybrid, Red Oak, Rift Cut Red Oak, Rift Cut White Oak and Walnut only. Madison – all 3/4" species available except Rift Cut Red Oak and Rustic Knotty. Stockbridge – all 3/4" species available except Rustic Knotty and Soft Maple.
Edge Profiles	
pg 7.1	Fairhaven – all 3/4" profiles available except LC Inset, L-297 and L-304. All other designs – all 3/4" profiles available.
Framing Beads	
pg 7.2	All designs – design specific, no options available.
Panel Raises	
pg 7.2A	Amesbury – defaults to 5/8" Reverse G-Cove; 3/8" Reverse G-Cove also available. Stockbridge – 1/4" veneered panel only. All other designs – design specific, no options available
Options	
pgs 7.3-7.15	All designs – all options available.
Mullions/Frame Only	
pgs 6.1-6.13	All designs – available in frame only and mullions. Amesbury, Bristol, Cortland and Fairhaven mullion default to CRP-10 with Square bead mullions. Madison mullion defaults to CRP-10751MT with Regular bead mullions, Square bead mullions also available.
Matching/Complementary Drawer Fronts	
pgs 4.46-4.47, 4.62-4.63	All available. Sheldon drawer front is single panel only.

M&T Shaker Drawer Fronts



Albany

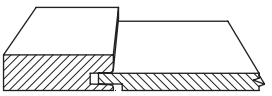

7" x 3-7/8"
1-1/2" rails
2-1/4" stiles
P-057 raise shown



Amesbury

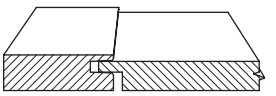

7" x 4-1/4"
1-1/2" rails
2-1/4" stiles
P-259 raise shown



Bristol

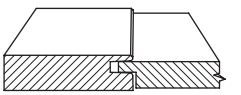

7-7/8" x 3-7/8"
1-1/2" rails
2-3/4" stiles
9/16" Veneered Panel
Essex Rout standard on stiles



Cortland

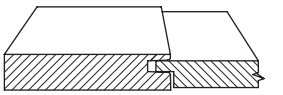

9-3/8" x 3-7/8"
1-1/2" rails
3-1/2" stiles
9/16" Veneered Panel



Fairhaven

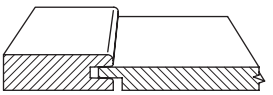

7" x 5-1/2"
2-1/4" framing
P-116 raise shown



Madison

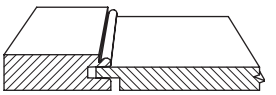

7" x 5-1/2"
2-5/16" framing
P-116 raise shown



Sheldon

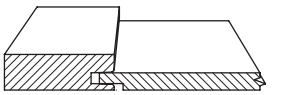

7" x 3-7/8"
1-1/2" rails
2-1/4" stiles
P-057 raise shown



Stockbridge

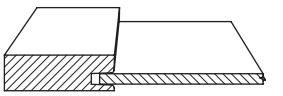

7" x 3-3/8"
1-1/2" rails
2-1/4" stiles
1/4" Veneered Panel

All plywood panel designs use a veneered, composite core panel. All plywood panels except Red and White Birch, Quarter Sawn White Oak and Rift Cut Red and White Oak use a plain sliced or half round face and plain sliced or rotary back veneer. Red and White Birch use a rotary face and back. Quarter Sawn White Oak uses a quarter sawn face and plain sliced back. Rift Cut Red Oak uses a rift cut on face and back. Rift Cut White Oak uses a rift cut face and plain sliced back. Horizontal grain direction standard unless otherwise noted; vertical grain available upon request. Minimums listed are based on panel raise shown and will vary by raise; see Offering and Availability for additional options. Framing width listed is determined by measuring across the back of the framing unless otherwise noted.

Offering And Availability

All Conestoga products are available in a wide variety of specifications to satisfy your custom needs. The information below indicates any exceptions or limitations pertaining to the designs on the previous page. For a detailed listing of a particular product specification, refer to the page indicated.

Species	
Material Pricing Guide	Albany, Amesbury, Fairhaven and Sheldon – all 3/4" species available. Bristol and Cortland – 3/4" Cherry, Paint Grade Hard Maple Hybrid, Red Oak, Rift Cut Red Oak, Rift Cut White Oak and Walnut only. Madison – all 3/4" species available except Rift Cut Red Oak and Rustic Knotty. Stockbridge – all 3/4" species available except Rustic Knotty and Soft Maple.
Edge Profiles	
pg 7.1	Fairhaven – all 3/4" profiles available except LC Inset, L-297 and L-304. All others – all 3/4" profiles available.
Framing Beads	
pg 7.2	All designs – design specific, no options available.
Panel Raises	
pg 7.2A	All designs – design specific, no options available.
Options	
pgs 7.3-7.15	All designs – all options available.

M&T Statesman Collection Doors

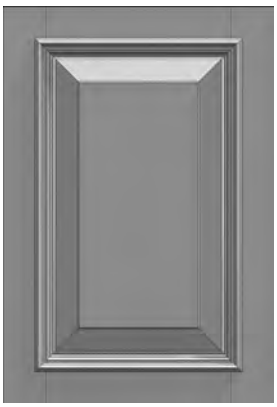

Churchill
matching drawer front available

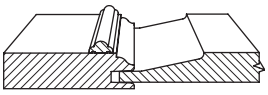

8-7/8" x 8-7/8"
2-3/4" framing
P-008 raise shown



Franklin
matching drawer front available

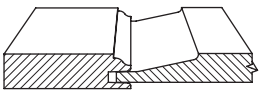

8-7/8" x 8-7/8"
2-3/4" framing
P-008 raise shown



Hancock
matching drawer front available

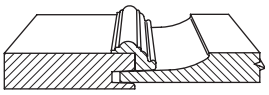

9" x 9"
2-3/4" framing
P-602 raise shown

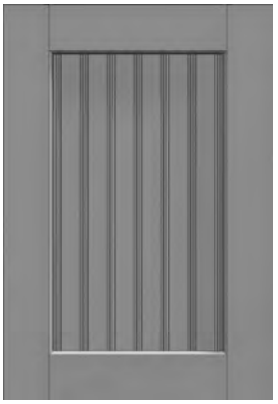

Lafayette
matching drawer front available

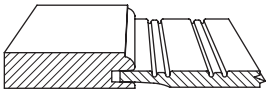

7-7/8" x 7-5/8"
2-3/4" framing
Reverse G-Cove raise shown
Vertical grain only
G-056 groove
1-1/2" spacing



Monroe
matching drawer front available

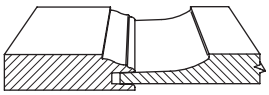

9" x 9"
2-3/4" framing
P-602 raise shown

Vertical grain direction standard unless otherwise noted; horizontal grain available upon request. Minimums listed are based on panel raise shown and will vary by raise; see Offering and Availability for additional options. Framing width listed is determined by measuring across the back of the framing unless otherwise noted.

Offering And Availability

All Conestoga products are available in a wide variety of specifications to satisfy your custom needs. The information below indicates any exceptions or limitations pertaining to the designs on the previous page. For a detailed listing of a particular product specification, refer to the page indicated.

Species	
Material Pricing Guide	All designs – all 3/4" species available. **Note:** Applied moulding designs produced in Quarter Sawn White Oak, Rift Cut Red Oak and Rift Cut White Oak utilize Standard grade applied mouldings and may contain small cathedrals, angled grain or other characteristics of flat cut Red and White Oak lumber, which are considered acceptable.
Edge Profiles	
pg 7.1	All 3/4" profiles available.
Framing Beads	
pg 7.2	Churchill, Franklin, Lafayette and Monroe – all 3/4" profiles available. Hancock – design specific, no options available.
Panel Raises	
pg 7.2A	Churchill and Franklin – all 3/4" profiles available. Hancock – P-057, P-602, Presidential and Reverse G-Cove only. Lafayette – design specific, no options. Monroe – defaults to P-602; G-Cove and Reverse G-Cove also available.
Options	
pgs 7.3-7.15	Churchill, Franklin, Hancock and Monroe – all options available. Lafayette – all options available except G-012 and G-015 panel grooves and Essex Rout.
Mullions/Frame Only	
pgs 6.1-6.13	All designs – available in frame only and mullions. Hancock mullion incurs special lite charges.
Matching/Complementary Drawer Fronts	
pgs 4.50-4.51, 4.62-4.63	All available.

M&T Statesman Collection Drawer Fronts



Churchill

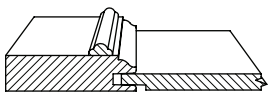

7-7/8" x 4-7/8"
2" rails
2-3/4" stiles
P-057 raise shown



Franklin

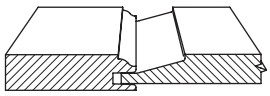

8-3/8" x 5-7/8"
1-1/2" rails
2-3/4" stiles
Slant raise shown



Hancock

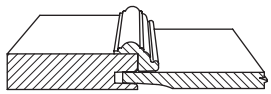

7-7/8" x 5-1/8"
1-1/2" rails
2-3/4" stiles
3/8" Reverse G-Cove raise shown

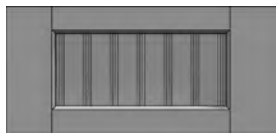

Lafayette

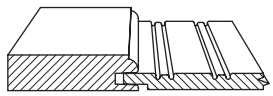

7-7/8" x 3-7/8"
1-1/2" rails
2-3/4" stiles
P-057 raise shown
Vertical grain only
G-056 groove
1-1/2" spacing



Monroe

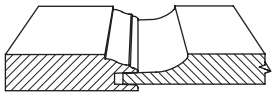

8-3/8" x 5-7/8"
1-1/2" rails
2-3/4" stiles
G-Cove raise shown

Horizontal grain direction standard unless otherwise noted; vertical grain available upon request. Minimums listed are based on panel raise shown and will vary by raise; see Offering and Availability for additional options. Framing width listed is determined by measuring across the back of the framing unless otherwise noted.

Offering And Availability

All Conestoga products are available in a wide variety of specifications to satisfy your custom needs. The information below indicates any exceptions or limitations pertaining to the designs on the previous page. For a detailed listing of a particular product specification, refer to the page indicated.

Species	
Material Pricing Guide	All designs – all 3/4" species available. **Note:** Applied moulding designs produced in Quarter Sawn White Oak, Rift Cut Red Oak and Rift Cut White Oak utilize Standard grade applied mouldings and may contain small cathedrals, angled grain or other characteristics of flat cut Red and White Oak lumber, which are considered acceptable.
Edge Profiles	
pg 7.1	All designs – all 3/4" profiles available.
Framing Beads	
pg 7.2	Churchill, Franklin, Lafayette and Monroe – all 3/4" framing beads available. Hancock – design specific, no options available.
Panel Raises	
pg 7.2A	Churchill, Franklin and Monroe – all 3/4" profiles available. All other designs – design specific, no options available.
Options	
pgs 7.3-7.15	Churchill, Franklin, Hancock and Monroe – all options available. Lafayette – vertical grain only, all options available except G-012 and G-015 panel grooves.

Grooved Panel Collection Doors

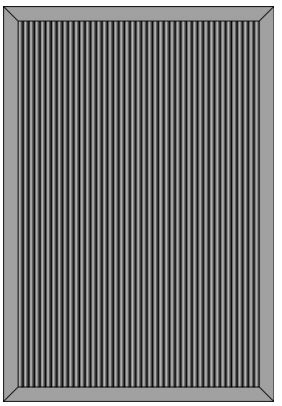

Alexandreia*
matching drawer front available

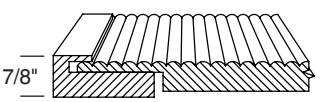

5-1/4" x 5-1/4"
13/16" wide framing on face
P-884 raise shown
Vertical grain only
G-239 groove
5/16" reed width

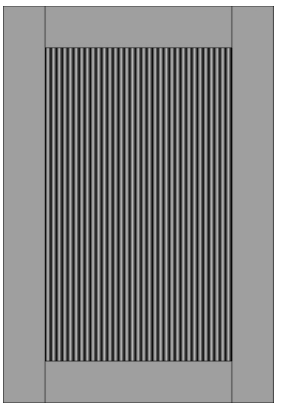

Tripoli**
matching drawer front available

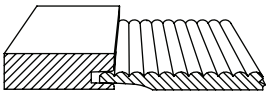

7" x 7"
2-1/4" framing
3/8" Reverse G-Cove raise shown
Vertical grain only
G-239 groove
5/16" reed width

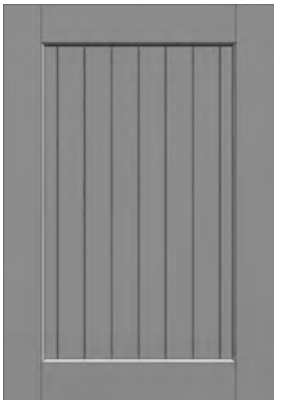

Ardmore
matching drawer front available

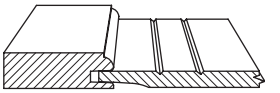

7 x 6-3/4"
2-1/4" framing
3/8" Reverse G-Cove raise shown
Vertical grain only
G-015 groove
1-1/2" spacing

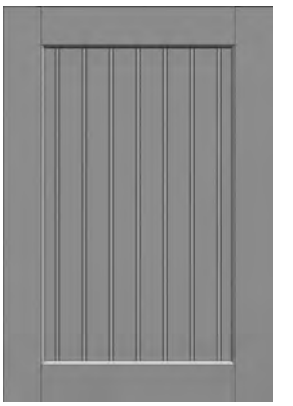

Yardley
matching drawer front available

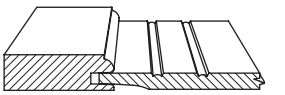

7" x 6-3/4"
2-1/4" framing
3/8" Reverse G-Cove raise shown
Vertical grain only
G-012 groove
1-1/2" spacing

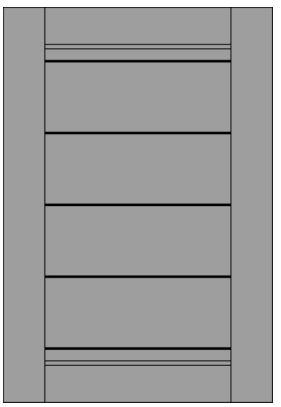

EriksonPP
matching drawer front available

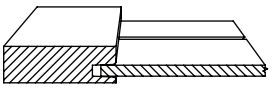

Stile cross section

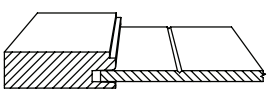

Rail cross section

7" x 7"
2-1/4" framing
1/4" Veneered Panel
Horizontal grain only
G-015 groove
4" spacing

Due to construction complexity, all multiple panel miter doors will include an additional charge per middle and upright rail plus the per-panel Design Charge. All plywood panel designs use a veneered, composite core panel. All plywood panels except Red and White Birch, Quarter Sawn White Oak and Rift Cut Red and White Oak use a plain sliced or half round face and plain sliced or rotary back veneer. Red and White Birch use a rotary face and back. Quarter Sawn White Oak uses a quarter sawn face and plain sliced back. Rift Cut Red Oak uses a rift cut on face and back. Rift Cut White Oak uses a rift cut face and plain sliced back. Vertical grain direction standard unless otherwise noted; horizontal grain available upon request. Minimums listed are based on panel raise shown and will vary by raise; see Offering and Availability for additional options. Framing width listed is determined by measuring across the back of the framing unless otherwise noted.

*Due to machinery-related limitations, Alexandreia solid wood and MDF single panel products, and Tripoli MDF single panel products cannot exceed 48” in width. For panel widths greater than 48”, order as a multi-panel design. Please note that single panel products 26” or greater in width are not warranted. An additional upcharge per panel applies for Alexandreia and Tripoli single panel widths greater than 24”.

**Due to machinery-related limitations, Tripoli solid wood single panel products cannot exceed 24” in width. For solid wood panel widths greater than 24”, order as a multi-panel design.

Offering And Availability

All Conestoga products are available in a wide variety of specifications to satisfy your custom needs. The information below indicates any exceptions or limitations pertaining to the designs on the previous page. For a detailed listing of a particular product specification, refer to the page indicated.

Species	
Material Pricing Guide	Alexandreia – all 1" species available except Rustic Knotty. Tripoli – all 3/4" species available except Rustic Knotty. EriksonPP – all 3/4" species available except Rustic Knotty and Soft Maple. Ardmore and Yardley – all 3/4" species available.
Edge Profiles	
pg 7.1	Alexandreia – B-2, L-034, L-149, L-253, L-686, L-1160, Machine Edge and V-2 only. All other designs – all 3/4" profiles available.
Framing Beads	
pg 7.2	Alexandreia and EriksonPP designs – design specific, no options available. Ardmore and Yardley – all 3/4" profiles available. Tripoli – defaults to Square bead, all other framing beads available.
Panel Raises	
pg 7.2A	All designs – design specific, no options available.
Options	
pgs 7.3-7.15	Alexandreia – putty pin holes, cross grain sanding, wear sanding, antiquing and concealed hinge boring only. EriksonPP – all options available except panel grooves, vertical grain panel, weathered grain and wood conditioner. Tripoli – all options except panel grooves, end grain sealant, wood conditioner, weathered grain, distressing, wear sanding and antiquing. Ardmore and Yardley – all options available except horizontal grain, panel grooves, weathered grain and wood conditioner. **Note:** Alexandreia and Tripoli are available with only non-glazed finishes.
Mullions/Frame Only	
pgs 6.1-6.13	Alexandreia – mullions not available. Frame only doors available in all eligible species. Multi-panel frame only doors not available. All other designs – available in frame only and mullions. EriksonPP and Tripoli mullions – order as CRP-10 with Square bead framing and Square bead mullions – incur standard lite charges. Ardmore and Yardley – mullions incur standard lite charges. **Note:** Alexandreia Frame Only overall framing width on the face of door is 2-1/2".
Matching/Complementary Drawer Fronts	
pgs 4.54-4.55, 4.62-4.63	All available.

Grooved Panel Collection Drawer Fronts

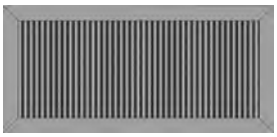

Alexandreia*

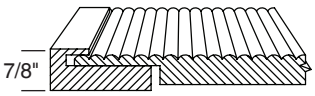

5-1/4" x 4-7/8"
13/16" wide framing on face
P-884 raise shown
Vertical grain only
G-239 groove
5/16" reed width

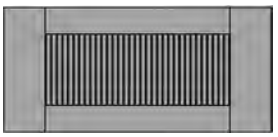

Tripoli**

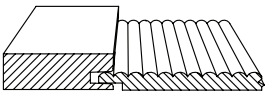

7" x 3-7/8"
1-1/2" rails
2-1/4" stiles
P-057 raise shown
Vertical grain only
G-239 groove
5/16" reed width



Ardmore

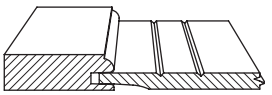

7" x 5-1/8"
1-1/2" rails
2-1/4" stiles
3/8" Reverse G-Cove raise shown
Vertical grain only
G-015 groove
1-1/2" spacing

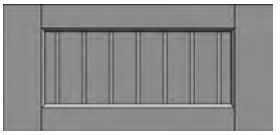

Yardley

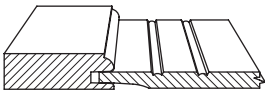

7" x 5-1/8"
1-1/2" rails
2-1/4 stiles
3/8" Reverse G-Cove raise shown
Vertical grain only
G-012 groove
1-1/2" spacing



EriksonPP

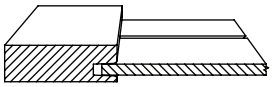

Stile cross section

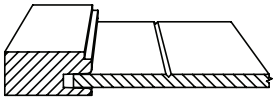

Rail cross section

7" x 3-7/8"
1-1/2" rails
2-1/4" stiles
1/4" Veneered Panel
Horizontal grain only
G-015 groove
4" spacing

*Due to machinery-related limitations, Alexandreia solid wood and MDF single panel products, and Tripoli MDF single panel products cannot exceed 48” in width. For panel widths greater than 48”, order as a multi-panel design. Please note that single panel products 26” or greater in width are not warranted. An additionalupcharge per panel applies for Alexandreia and Tripoli single panel widths greater than 24”.

**Due to machinery-related limitations, Tripoli solid wood single panel products cannot exceed 24” in width. For solid wood panel widths greater than 24”, order as a multi-panel design.

Offering And Availability

All Conestoga products are available in a wide variety of specifications to satisfy your custom needs. The information below indicates any exceptions or limitations pertaining to the designs on the previous page. For a detailed listing of a particular product specification, refer to the page indicated.

Species	
Material Pricing Guide	Alexandreia – all 1" species available except Rustic Knotty. Tripoli – all 3/4" species available except Rustic Knotty. EriksonPP – all 3/4" species available except Rustic Knotty and Soft Maple. Ardmore and Yardley – all 3/4" species available.
Edge Profiles	
pg 7.1	Alexandreia – B-2, L-034, L-149, L-253, L-686, L-1160, Machine Edge and V-2 only. All other designs - all 3/4" profiles available.
Framing Beads	
pg 7.2	Ardmore, Tripoli and Yardley – all 3/4" framing beads available. Tripoli – defaults to Square bead, all other framing beads available. All other designs - design specific, no options available.
Panel Raises	
pg 7.2A	Tripoli - P-057 and Reverse G-Cove only. All other designs – design specific, no options available.
Options	
pgs 7.3-7.15	Alexandreia - putty pin holes, cross grain sanding, wear sanding, antiquing and concealed hinge boring only. EriksonPP - all options available except panel grooves, vertical grain panel, weathered grain and wood conditioner. Ardmore and Yardley - all options available except horizontal grain panel, panel grooves, weathered grain and wood conditioner. Tripoli - all options except panel grooves, end grain sealant, wood conditioner, weathered grain, distressing and wear sanding. **NOTE:** Alexandreia and Tripoli are available with only non-glazed finishes.

1" Thick Door Collection



CRP-10
matching drawer front available

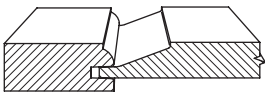

7-1/2" x 7-1/2"
2-1/4" framing
Slant raise shown



CRP-10A48
matching drawer front available

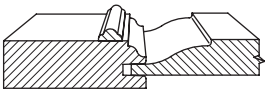

8-7/8" x 8-7/8"
3" framing
P-raise shown



CRP-30

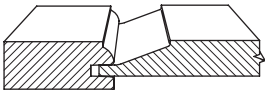

8-1/4" x 8-1/2"
2-1/4" framing
Slant raise shown



Normandie
matching drawer front available

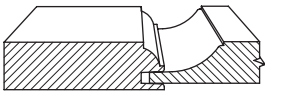

9-3/4" x 9-3/4"
3-3/8" framing
P-317 raise shown



Provence
matching drawer front available

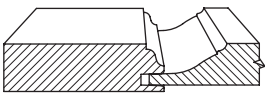

9-7/8" x 9-7/8"
3-3/8" framing
P-320 raise shown



Staffordshire
matching drawer front available

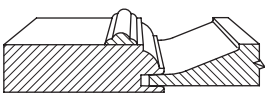

10-3/8" x 10-3/8"
3-3/8" framing
P-316 raise shown

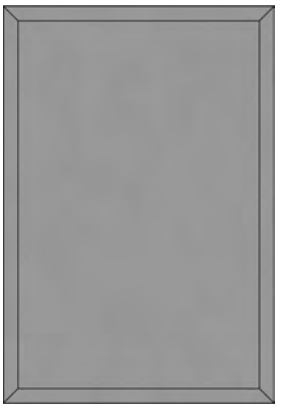

Venus78
matching drawer front available

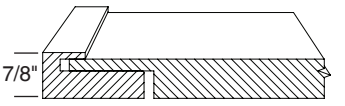

5-1/4" x 4-7/8"
13/16" wide framing on face
7/8" thick framing



Woodridge (miter)
matching drawer front available

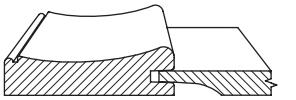

9-7/16" x 9-7/16"
3-1/2" framing
1/2" Reverse G-Cove raise shown

Due to construction complexity, all multiple panel miter doors include an additional charge per middle and upright rail plus the per-panel Design Charge. Vertical grain direction standard unless otherwise noted; horizontal grain available upon request. Minimums listed are based on panel raise shown and will vary by raise; see Offering and Availability for additional options. Framing width listed is determined by measuring across the back of the framing unless otherwise noted. All 1" thick doors will incur a 30% material upcharge. If premium grade is selected, additional upcharges will apply. Except for Venus78 design, framing width listed is determined by measuring across the back of the framing unless otherwise noted.

Offering And Availability

All Conestoga products are available in a wide variety of specifications to satisfy your custom needs. The information below indicates any exceptions or limitations pertaining to the designs on the previous page. For a detailed listing of a particular product specification, refer to the page indicated.

Species	
Material Pricing Guide	CRP-10, CRP-10A48 and CRP-30 – all 3/4” and 1" species available. Normandie, Provence and Staffordshire – 1" Alder, Cherry, Hard Maple, Paint Grade Hard Maple, Pine, Red Oak, Rift Cut Red Oak, Soft Maple, Walnut and White Oak only. Venus78 - all 1” species available except Paint Grade and Rustic Knotty. Woodridge – all 1" species available except Knotty Pine, Rift Cut Red Oak, Rift Cut White Oak and Rustic Knotty. **Note:** Applied moulding designs produced in Quarter Sawn White Oak, Rift Cut Red Oak and Rift Cut White Oak utilize Standard grade applied mouldings and may contain small cathedrals, angled grain or other characteristics of flat cut Red and White Oak lumber, which are considered acceptable.
Edge Profiles	
pg 7.1	CRP-10, CRP-10A48 and CRP-30 – all 3/4” and 1" profiles available. Venus78 – B-2, L-034, L-149, L-253, L-686, L-1160, Machine Edge and V-2 only. Woodridge – design specific, no options available. All other designs – all 1" profiles available.
Framing Beads	
pg 7.2	CRP-10, CRP-10A48 and CRP-30 – all 3/4" and 1" profiles available. All other designs – design specific, no options available.
Panel Raises	
pg 7.2A	CRP-10, CRP-10A48, and CRP-30 – all 3/4" and 1" profiles available. Normandie, Provence and Staffordshire – 3/8" Reverse G-Cove, P-316, P-317 and P-320 only. Venus78 – design specific, no options available. Woodridge – all 1" profiles available.
Options	
pgs 7.3-7.15	Venus78 - concealed hinge boring, back-routed hand pull, sample ID label, antiquing, weathered grain, distressing, G-012, G-015, G-056 panel grooves, wear sanding and hybrid seal coat only. Woodridge – concealed hinge boring, back-routed hand pull, sample ID label, antiquing, distressing, G-012, G-015, G-056 panel grooves only. All other designs – all options available. **Note:** Prefinished Woodridge designs in specific specie and finish combinations will receive the Wood Conditioner Option unless instructed not to by customer.
Mullions/Frame Only	
pgs 6.1-6.13	Venus78 - available in frame only and mullions in all eligible species. Multi-panel frame only doors not available. All other designs – available in frame only and mullions. Square bead standard on Woodridge. **Note:** Venus78 framing width on the face of the frame only door is 2-1/2".
Matching/Complementary Drawer Fronts	
pgs 4.58-4.59, 4.62-4.63	All available except CRP-30.

1" Thick Drawer Front Collection



CRP-10

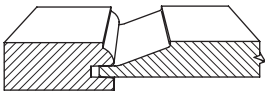

7-1/2" x 5-7/8"
1-1/2" rails
2-1/4" stiles
Slant raise shown



CRP-10A48

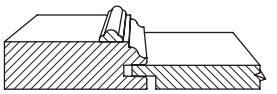

8-3/8" x 4-7/8"
2" rails
3" stiles
P-116 raise shown



Normandie

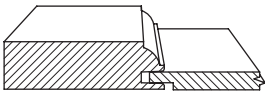

9-1/8" x 5-3/8"
2-1/4" rails
3-3/8" stiles
P-057 raise shown



Provence

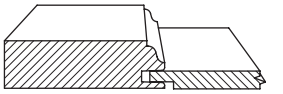

9-1/8" x 5-3/8"
2-1/4" rails
3-3/8" stiles
P-057 raise shown



Staffordshire

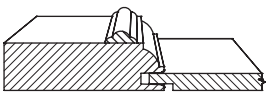

9-1/8" x 5-3/8"
2-1/4" rails
3-3/8" stiles
P-057 raise shown



Venus78

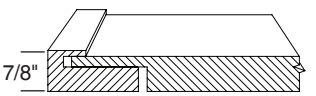

5-1/4" x 4-7/8"
13/16" wide framing on face
7/8" thick framing



Woodridge (miter)

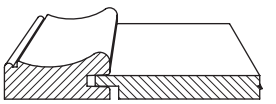

5-3/8" x 5-3/8"
2-1/4" framing
P-116 raise shown

All 1" thick drawer fronts will incur a 30% material upcharge. If premium grade is selected, additional upcharges will apply. Horizontal grain direction standard unless otherwise noted; vertical grain available upon request. Minimums listed are based on panel raise shown and will vary by raise; see Offering and Availability for additional options. Except for Venus78 design, framing width listed is determined by measuring across the back of the framing unless otherwise noted.

Offering And Availability

All Conestoga products are available in a wide variety of specifications to satisfy your custom needs. The information below indicates any exceptions or limitations pertaining to the designs on the previous page. For a detailed listing of a particular product specification, refer to the page indicated.

Species	
Material Pricing Guide	CRP-10 and CRP-10A48 – all 3/4" and 1" species available. Normandie, Provence and Staffordshire – 1" Alder, Cherry, Hard Maple, Paint Grade Hard Maple, Pine, Red Oak, Rift Cut Red Oak, Soft Maple, Walnut and White Oak only. Venus78 - all 1" species available except Paint Grade and Rustic Knotty. Woodridge – all 1" species available except Rift Cut Red Oak, Knotty Pine, Rift Cut White Oak and Rustic Knotty. **Note:** Applied moulding designs produced in Quarter Sawn White Oak, Rift Cut Red Oak and Rift Cut White Oak utilize Standard grade applied mouldings and may contain small cathedrals, angled grain or other characteristics of flat cut Red and White Oak lumber, which are considered acceptable.
Edge Profiles	
pg 7.1	CRP-10 and CRP-10A48 – all 3/4" and 1" profiles available. Venus78 – B-2, L-034, L-149, L-253, L-686, L-1160, Machine Edge and V-2 only. Woodridge – design specific, no options available. All other designs – all 1" profiles available.
Framing Beads	
pg 7.2	CRP-10 and CRP-10A48 – all 3/4" and 1" profiles available. All other designs – design specific, no options available.
Panel Raises	
pg 7.2A	CRP-10 and CRP-10A48 – all 3/4" and 1" profiles available. Normandie, Provence and Staffordshire – 3/8" Reverse G-Cove, P-316, P-317 and P-320 only. Venus78– design specific, no options available. Woodridge – all 1" profiles available.
Options	
pgs 7.3-7.15	Venus78 – back routed hand pull, sample ID label, antiquing, weathered grain, distressing, G-012, G-015, G-056 panel grooves, wear sanding and hybrid seal coat only. Woodridge – G-012, G-015, G-056 panel grooves, distressing, antiquing, back-routed hand pull and sample ID label only. All other designs – pegs, G-012, G-015, G-056 panel grooves, radius corners, distressing, wear sanding, back-routed hand pull and sample ID label. **Note:** Prefinished Woodridge designs in specific specie and finish combinations will receive the Wood Conditioner Option unless instructed not to by customer.

3-Piece and Batten Doors

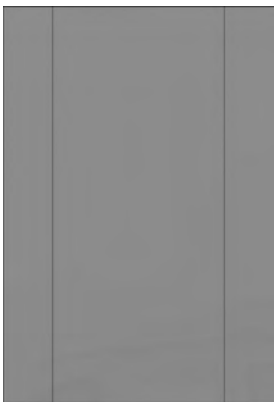

Aurora

matching drawer front available

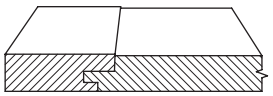

7-1/2" x 7-1/2"

Stiles - 2-1/4" framing on face.

Horizontal grain standard on panel.

Solid wood framing sits slightly higher than 3/4" thick plywood panel.

MDF core plywood panel.



Flush Batten

matching drawer front available

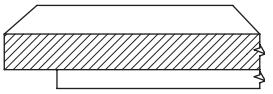

6" x 7-1/2"

Battens are attached to back.

See Batten Specifications below.

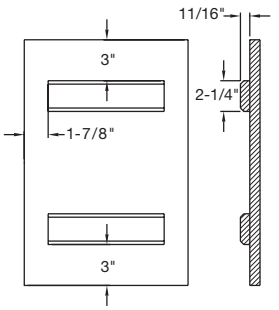

Batten Specifications

Batten location - 3" from top and bottom of door. 1-7/8" from each door edge.

All plywood panel designs use a veneered, composite core panel. All plywood panels except Red and White Birch, Quarter Sawn White Oak and Rift Cut Red and White Oak use a plain sliced or half round face and plain sliced or rotary back veneer. Red and White Birch use a rotary face and back. Quarter Sawn White Oak uses a quarter sawn face and plain sliced back. ¾" thick Rift Cut Red and White Oak panels use rift cut on face and back. All other rift cut plywood uses rift cut veneer on face, plain slice on back. Vertical grain direction standard unless otherwise noted; horizontal grain available upon request. Framing width listed is determined by measuring across the back of the framing unless otherwise noted.

**See the one-piece design pricing chart on the opposite page for additional pricing information.

Offering And Availability

All Conestoga products are available in a wide variety of specifications to satisfy your custom needs. The information below indicates any exceptions or limitations pertaining to the designs on the previous page. For a detailed listing of a particular product specification, refer to the page indicated.

Species	
Material Pricing Guide Aurora – pg 4.61	Aurora – panel available in 3/4" plywood in species listed in chart at bottom of page; framing available in all 3/4" species except Rustic Knotty. Matching specie solid wood edgeband on top and bottom of panel. Flush Batten - all 3/4" species available.
Edge Profiles	
pg 7.1	Aurora – top and bottom, design specific; stiles – all 3/4" profiles available. Flush Batten designs – all 3/4" available.
Framing Beads	
pg 7.2	All designs – design specific, no options available.
Panel Raises	
pg 7.2A	All designs – design specific, no options available.
Options	
pgs 7.3-7.15	Aurora – concealed hinge boring, pegs, radius corners, sample ID label and putty pin holes only. Flush Batten – all options available except Essex Rout.
Mullions/Frame Only	
pgs 6.1-6.13	All designs – frame only not available. For mullions order as a CRP-10 mullion door with Square bead framing.
Matching/Complementary Drawer Fronts	
pgs 4.62-4.63	Available for Aurora and Flush Batten.

Solid Wood 1-Piece Slab Design Upcharges

	Length/Width					
Width/Length	**Min to 39-15/16"**	**40" to 54-15/16"**	**55" to 79-15/16"**	**80" to 99-15/16"**	**100" to 119-15/16"***	**120"to 144"†**
Min to 11-15/16"	Slab Design Charge	Slab Design Charge	Slab Design Charge +	Slab Design Charge +	Slab Design Charge +	Slab Design Charge +
12" to 20-15/16"	Slab Design Charge	Slab Design Charge	Slab Design Charge +	Slab Design Charge +	Slab Design Charge +	Slab Design Charge +
21" to 35-15/16"	Slab Design Charge	Slab Design Charge	Slab Design Charge +	Slab Design Charge +	Slab Design Charge +	Slab Design Charge +

Any solid wood Slab products exceeding 35-15/16" in width (across the grain) will be quoted by Special Designs.
***100 to 119-15/16" specie availability:** 3/4" thick species include Cherry, Hard Maple, Hickory, Paint Grade Hard Maple, Quarter Sawn White Oak, Red Oak, Rift Cut Red Oak, Rift Cut White Oak, Rustic Knotty Cherry, Rustic Knotty Hard Maple, Soft Maple, Walnut and White Oak. 1" thick species (1" upcharge applies) include Cherry, Hard Maple, Red Oak and Soft Maple.
†**120" to 144" specie availability:** 3/4" thick species include Cherry, Hard Maple, Hickory, Paint Grade Hard Maple, Quarter Sawn White Oak, Red Oak, Rift Cut Red Oak, Rift Cut White Oak, Soft Maple, Walnut, White Birch and White Oak. 1" thick species (1" upcharge applies) include Cherry, Hard Maple, Paint Grade Hard Maple and Soft Maple.

Aurora Material Charges

Specie	Price	Specie	Price
Bamboo		Oak, Red, Rift Cut	
Cherry		Oak, White, Rift Cut	
Maple, Hard		PGHM Hybrid	
MDF		Walnut	

When ordering mixed panel and framing species, add 10% to panel Material Charge above.

1-Piece and 3-Piece Drawer Fronts



Slab

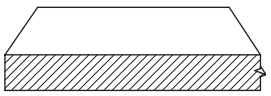

1-1/2" x 2-1/2"
Any edge profile
3/4" or 1" thickness



#10

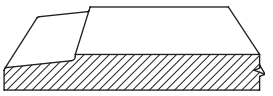

3" x 3"
Matches slant raise
3/4" or 1" thickness



Keystone

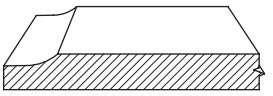

2-3/4" x 2-3/4"
Matches G-Cove raise
3/4" or 1" thickness



Marcel**

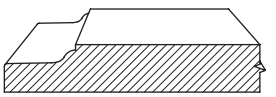

3-1/2" x 3-1/2"
Presidential raise shown
3/4" or 1" thickness



10141

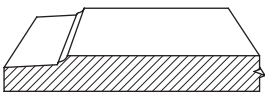

3-1/4" x 3-1/4"
3/4" or 1" thickness



1-1/8" Sandwich

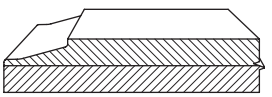

3-1/2" x 3-1/2"
3/4" Slant raise shown
Specify panel raise and edge profile
Two slabs are glued together to create a thicker drawer front



Aurora

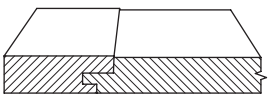

7-1/2" x 2-3/4"
Stiles - 2-1/4" framing on face
Horizontal grain standard on panel.
Solid wood framing sits slightly higher than 3/4" thick plywood panel

All plywood panel designs use a veneered, composite core panel. All plywood panels except Red and White Birch, Quarter Sawn White Oak and Rift Cut Red and White Oak use a plain sliced or half round face and plain sliced or rotary back veneer. Red and White Birch use a rotary face and back. Quarter Sawn White Oak uses a quarter sawn face and plain sliced back. Rift Cut Red and White Oak use a rift cut face and back. Framing width listed is determined by measuring across the back of the framing unless otherwise noted. All 1" and 1-1/8" thick drawer fronts will incur a 30% material upcharge. If premium grade is selected, additional upcharges will apply. Horizontal grain direction standard unless otherwise noted; vertical grain available upon request.
**See the one-piece design pricing chart on the opposite page for additional pricing information.

Offering And Availability

All Conestoga products are available in a wide variety of specifications to satisfy your custom needs. The information below indicates any exceptions or limitations pertaining to the designs on the previous page. For a detailed listing of a particular product specification, refer to the page indicated.

Species	
Material Pricing Guide Aurora – pg 4.63	Slab, #10, Keystone, Marcel and 10141 – all 3/4" and 1" species available. 1-1/8" Sandwich – all 3/4" species available except Bamboo. Aurora – panel available in 3/4" plywood in species listed in the chart at bottom of this page – framing available in all 3/4" species except Rustic Knotty. Matching specie solid wood edgeband on top and bottom of panel.
Edge Profiles	
pg 7.1	3/4" Slab, 1" #10, 1" Keystone and 1-1/8" Sandwich – all 3/4" profiles available. 3/4" #10 - all 3/4" profiles available except B and C. 10141 and Marcel – all profiles available except B and C. Aurora top and bottom edge– design specific, stiles – Machine Edge standard, all 3/4" profiles available.
Panel Raises	
pg 7.2A	Keystone, #10, 10141 – design specific, no options available. 1-1/8" Sandwich and Marcel – all 3/4" profiles available except P-057 and Reverse G-Cove.
Options	
pgs 7.3-7.15	Slab – pegs, radius corners, back-routed hand pull, sample ID label, distressing and wear sanding only. Aurora – pegs, radius corners, sample ID label and putty pin holes only. All other designs – back-routed hand pull, sample ID label, distressing and wear sanding only.

Solid Wood 1-Piece Slab Design Upcharges

	Length/Width					
Width/Length	**Min to 39-15/16"**	**40" to 54-15/16"**	**55" to 79-15/16"**	**80" to 99-15/16"**	**100" to 119-15/16"***	**120"to 144"†**
Min to 11-15/16"	Slab Design Charge	Slab Design Charge	Slab Design Charge +	Slab Design Charge +	Slab Design Charge +	Slab Design Charge +
12" to 20-15/16"	Slab Design Charge	Slab Design Charge	Slab Design Charge +	Slab Design Charge +	Slab Design Charge +	Slab Design Charge +
21" to 35-15/16"	Slab Design Charge	Slab Design Charge +	Slab Design Charge +	Slab Design Charge +	Slab Design Charge +	Slab Design Charge +

Any solid wood Slab products exceeding 35-15/16" in width (across the grain) will be quoted by Special Designs.
***100 to 119-15/16" specie availability:** 3/4" thick species include Cherry, Hard Maple, Hickory, Paint Grade Hard Maple, Quarter Sawn White Oak, Red Oak, Rift Cut Red Oak, Rift Cut White Oak, Rustic Knotty Cherry, Rustic Knotty Hard Maple, Soft Maple, Walnut and White Oak. 1" thick species (1" upcharge applies) include Cherry, Hard Maple, Red Oak and Soft Maple.
†**120" to 144" specie availability:** 3/4" thick species include Cherry, Hard Maple, Hickory, Paint Grade Hard Maple, Quarter Sawn White Oak, Red Oak, Rift Cut Red Oak, Rift Cut White Oak, Soft Maple, Walnut, White Birch and White Oak. 1" thick species (1" upcharge applies) include Cherry, Hard Maple, Paint Grade Hard Maple and Soft Maple.

Aurora Material Charges

Specie	Price	Specie	Price
Bamboo		Oak, White, Rift Cut	
Cherry		PGHM Hybrid	
Maple, Hard		Walnut	
Oak, Red, Rift Cut			

When ordering mixed panel and framing species, add 10% to panel Material Charge above.

ShadowLine Black MDF Core Doors and Drawers

ShadowLine products are made utilizing a solid black MDF substrate with real wood veneers applied to the face and back. Door styles include a Slab or a grooved Slab, which exposes the black core. The outside edges are non-banded, permitting the black substrate to remain visible.

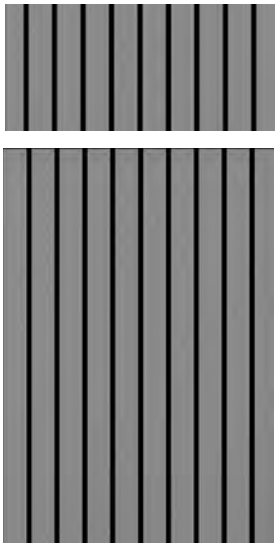

Soho

Matching drawer front available

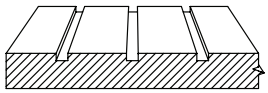

Min: 5" x 5"
Max: 44" x 95-1/2" Vertical grain only
G-259 groove only
1-1/2" spacing



Yuma

Matching drawer front available

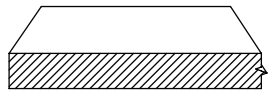

Min: 5" x 5"
Max: 44" x 95-1/2"
Vertical grain standard

Offering And Availability	
Species	
Material Pricing Guide	3/4" Veneered panel with black MDF core available in Cherry, Hard Maple, Rift Cut White Oak, and Walnut. See chart below.
Edge Profiles	
pg 7.1	Soho – Machine Edge only, no options. Yuma – Machine Edge is standard, L-1353 is optional.*
Options	
pg 7.3-7.15	Soho - back routed hand-pull, concealed hinge boring, Soss hinge, sample ID label, and design-specific groove. The G-259 groove has 1/4" x 5/32" with 1-1/2" spacing. Soho standard panel grooving begins in the center of panel width and grooves spaced 1-1/2" from center of one groove to center of the next. Grooving will continue across the panel width, with the final groove being no closer than 3/4" from the center of the groove to the panel edge. Custom groove spacing is available upon request. Yuma - back routed hand-pull, concealed hinge boring, Soss hinge, and sample ID label. For longer spans, shiplap panel option is available on pg 6.15C. All wiping stains and high complexity Truetone stains available. **Note:** Stains will alter the color of the exposed substrate.
Mullions/Frame Only	
	Not available.

ShadowLine – Material Charge	
Cherry	
Maple, Hard	
Oak, White, Rift Cut	
Walnut	

*L-1353 profile, optional

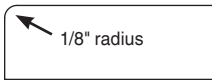

Edgebanded Doors and Drawer Fronts



Astoria



Savoy

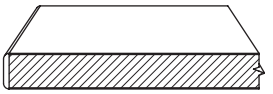

Min: 2" x 6"
Max: 48" x 96"
2mm matching specie veneer edgeband.
Vertical grain standard on doors and drawer fronts.

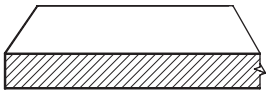

Min: 2" x 6"
Max: 48" x 96"
.5mm matching specie veneer edgeband.
Vertical grain standard on doors and drawer fronts.

Astoria/Savoy – Material Charges (1 sq. ft. min.)	
Bamboo (Caramelized)	
Cherry	
Maple, Hard	
Oak, Red, Rift Cut*	
Oak, White, Rift Cut*	
Walnut	

Bamboo – uses Grade A vertical/caramelized veneers on face and back. Cherry and Walnut – use Grade A book matched veneers on face with Grade 1 veneers on back. Hard Maple, Rift Cut Red Oak and Rift Cut White Oak – use Grade A slip matched veneers on face with Grade 2 veneers on back. All species use 3/4" thick composite
TSCA/CARB2 compliant substrates.

*When ordering Astoria or Savoy products in Rift Cut Red Oak or Rift Cut White Oak, wood edgeband is standard Oak, not Rift Cut.

Contrasting Specie Edgeband Option	
Panel Specie	**2mm Edgeband Specie**
Bamboo (Caramelized)	Bamboo (Caramelized)
Cherry	Cherry
Maple, Hard	Maple, Hard
Oak, White, Rift Cut*	Oak, White, Rift Cut*
Walnut	Walnut

An assortment of 3/4" panel and 2mm edgeband species can be combined to create a striking appearance. Use square footage pricing of the desired panel specie plus a 10% upcharge.

Offering And Availability

All Conestoga products are available in a wide variety of specifications to satisfy your custom needs. The information below indicates any exceptions or limitations pertaining to the designs on the previous page. For a detailed listing of a particular product specification, refer to the page indicated.

Species	
Material Pricing Guide	Astoria and Savoy – 3/4" thick Caramelized Bamboo, Cherry, Hard Maple, Rift Cut Red Oak, Rift Cut White Oak and Walnut plywood only.
Edge Profiles	
pg 7.1	All designs – design specific, no options available. For accompanying wood or MDF products, order Machine Edge to replicate Savoy and L-034 edge to replicate Astoria.
Options	
pgs 7.3-7.15	All designs – weathered grain, concealed hinge boring and Soss hinge boring. Horizontal grain direction available. Sequential grain matching available; see following page for program details and pricing. Sequential Grain Match Order Form in Order Forms Section of manual. **Note:** Colourtones, primers and Prism Paints are not available on edgeband doors. Use MDF slab with L-034 edge to replicate Astoria or Machine Edge to replicate Savoy as an alternative to utilize Colourtones, primers and Prism Paint finishes.
Mullions/Frame Only	
pgs 6.1-6.13	Mullion designs are available in solid Caramelized Bamboo, Cherry, Hard Maple, Rift Cut White Oak and Walnut only; order as CRP-10 door with square bead. Astoria and Savoy designs are available as frame only. Design Charges: Astoria, Savoy. **Note:** Solid wood mullion doors may accept stain different than plywood doors. Please note that when Astoria or Savoy frame only is ordered, a medium gray retainer moulding is automatically included (upcharge applies). The retainer moulding covers the raw substrate eliminating the need to mask visible substrates. **Note:** Astoria and Savoy frame only pricing is calculated using the Design Charge above plus the actual square footage multiplied by the material square foot charge. In addition, the following upcharge must be applied for retainer moulding: 1.0 to 4.0 sq. ft. 4.01 to 7.0 sq. ft. 7.01 sq. ft. or larger 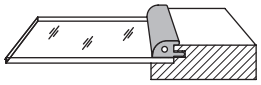 Retainer Moulding

Note: Astoria and Savoy designs will receive a stamp on the back of the door in the bottom left corner to indicate which side is the back of the door. The stamp consists of three small indentations in a triangular pattern which in most cases will be eliminated or partially eliminated when bored for concealed hinges. Frame only options will not receive this stamp.

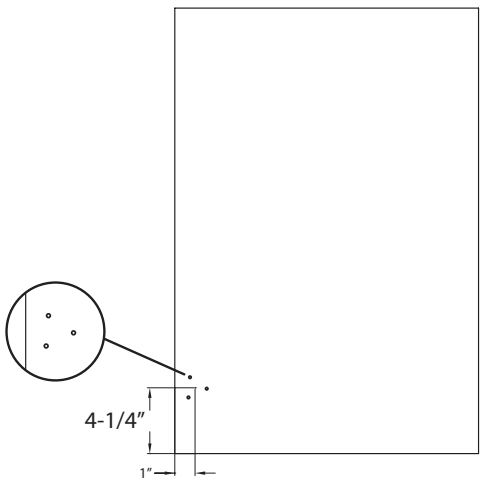

Sequential Grain Matching

- Sequential Grain Matching is available with Astoria and Savoy doors and drawer fronts.
- Vertical or horizontal grain orientation is available and must be specified.
- Grain matching will flow through all of the associated doors and/or drawer fronts on individual cabinets. A maximum of 6 pieces is permitted within a single cabinet.
- Grain will not match from cabinet to cabinet.
- Due to the cutter diameter required to cut panel blanks, spacing is 1/8" between sequentially matched components unless otherwise noted on specific templates.
- Each door and drawer front will be identified to designate its sequence within a cabinet. Doors and drawer fronts will be stamped on the edge in the lower right corner with a numeric/alpha code combination to represent your item number and all of the related pieces to that specific item. (Example: 1A, 1B, etc.)
- Doors and drawer fronts that require sequential matching are priced using the Material Charges listed below by specie.
- Maximum cabinet sizes cannot exceed 46" across the grain or 94" with the grain.
- Additional information regarding the Sequential Grain Matching program, including configuration templates, is available on the Customer Business Portal or in a PDF file. Contact your Sales Representative or Customer Service.
- In the event that a replacement is needed, the entire template (series of doors and drawer fronts) will need to be reordered to ensure a consistent grain match.

Design Charge (Per Door/Drawer Front)	
Astoria	
Savoy	

Material Charge - Astoria/Savoy (1 sq. ft. min.)			
Bamboo (Caramelized)		Oak, Red, Rift Cut	
Cherry		Oak, White, Rift Cut	
Maple, Hard		Walnut	

Ordering Instructions

- To achieve Sequential Grain Matching, all corresponding doors and drawer fronts will be cut from an oversized blank.
- Doors and drawer fronts requiring Sequential Grain Matching must be ordered using Conestoga's Sequential Grain Matching (SGM) Templates and Order Form #2 to identify the specific cabinet configuration, position and sequence of the individual pieces within a cabinet. Templates for cabinet configurations from 2 - 6 pieces.
- Select the appropriate SGM template number from PDF that matches your cabinet configuration. Indicate the grain direction of your doors and drawer fronts (vertical or horizontal).
- Following the alpha sequence of the template, enter your doors and drawer fronts in positions A, B, C etc., width x height.
- Indicate whether each piece is being used as a door or a drawer front.
- Specify concealed hinge boring and grain direction, as well as any special instructions in the notes section.

Alternative Materials

Designer and consumer preferences are constantly evolving, with painted finishes and textured Thermally Fused Laminates & melamines continuing to play a prominent role in the kitchen market.

For painted finishes, Conestoga offers a broad selection of MDF doors and drawer fronts, in both 1-Piece and 5-Piece products, including 1-Piece face routed designs and 5-Piece mortise & tenon, mitered, applied moulding and grooved panel doors and drawer fronts. With over 50 MDF door designs to choose from, our MDF products provide the perfect canvas for painted finishes without the expansion-contraction issues associated with painted wood.

Conestoga's Alternative Material programs consist of six different material collections, with a palette of more than 70 colors in varying textures and finishes. Programs include Decorative Laminate Veneers (DLV - Allure), Thermally Textured Surfaces (TTS - Intrigue, Strata & Vogue), Synchronicity High Gloss and Synchronicity Super Matte. Ranging from the ultra-modern High Gloss and Super Matte Slab doors and drawer fronts, to the more transitional 5-Piece DLV products and Slab, 3-Piece and 5-Piece TTS door designs, these products provide the versatility needed in the kitchen, bath, closet or other rooms throughout the house.

Additional design options include High Gloss and TTS Sequential Grain Matching, and Aluminum Hand Pulls for all Slab designs. Matching accessories are also available within each product line, but vary by collection.

Alternative Materials Table of Contents

MDF – 1-Piece Doors & Drawer Fronts 5.2-5.9

MDF – 5-Piece Doors & Drawer Fronts 5.10-5.29

DLV – Allure Doors, Drawer Fronts & Accessories 5.30-5.49

TTS – Intrigue Doors & Drawer Fronts 5.50-5.51B

TTS – Strata Doors & Drawer Fronts 5.52-5.53B

TTS – Vogue Doors & Drawer Fronts 5.54-5.55B

TTS – Sequential Grain Match Option 5.56

TTS – Accessories 5.57-5.62

Synchronicity – High Gloss PET, UV Lacquer Doors & Drawer Fronts 5.64-5.65

Synchronicity – Super Matte Doors & Drawer Fronts 5.66-5.67

Synchronicity – High Gloss Sequential Grain Match Option 5.68

Synchronicity Accessories 5.69-5.72

1-Piece MDF Door Designs



Corsica
matching drawer front available

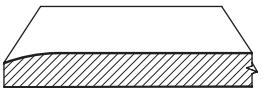

3" x 3"
Max: 48" x 96"



Slab
matching drawer front available

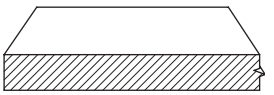

1-1/4" x 1-1/4"
Max: 48" x 96"



10RC
matching drawer front available

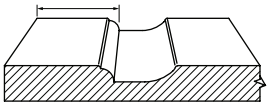

7-5/8" x 7-5/8"
Max: 48" x 96"
2-5/16" framing



10RC2
matching drawer front available

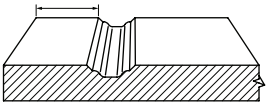

5-7/8" x 5-7/8"
Max: 48" x 96"
1-3/4" framing



10SQ1

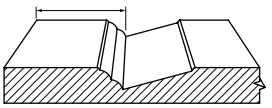

8-1/2" x 8-1/2"
Max: 48" x 96"
(single panel only)
2-1/2" framing



10SQ2
matching drawer front available

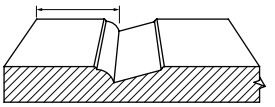

7-7/8" x 7-7/8"
Max: 48" x 96"
(single panel only)
2-5/16" framing



10SQ3
matching drawer front available

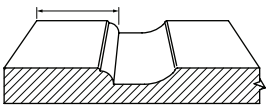

7-7/8" x 7-7/8"
Max: 48" x 96"
2-5/16" framing

Framing width listed is determined by measuring between the points indicated on the top edge of the cross section drawings. Note that the 10RC2 includes only the face of the framing. All MDF products utilize TSCA/CARB2 compliant materials.

Offering And Availability

All Conestoga products are available in a wide variety of specifications to satisfy your custom needs. The information below indicates any exceptions or limitations pertaining to the designs on the previous page. For a detailed listing of a particular product specification, refer to the page indicated.

Material	
Material Pricing Guide	Corsica – 3/4" MDF only. All other designs – 3/4" and 1" MDF. **Note:** There is a maximum of 7 square feet for products made with 1" thick MDF. Any 1" MDF product exceeding 7 square feet will be processed through Special Designs and incur additional fees due to labor charges to safely handle these heavy items.
Edge Profiles	
pg 7.1	Corsica – design specific, no options available. All other designs – B-2, C-2, H-2, L-059 L-149, L-253, L-382, L-686, L-803, L-1160, LC-2, Machine Edge, PRS-2 and V-2 available in 3/4" and 1". L-034 – available in 3/4" only.
Framing Beads	
	All designs – design specific, no options available.
Panel Raises	
pg 7.2A	All profiles are design specific, no options. The 10RC and 10RC2 doors are radiused on the inside corners of the framing. The 10SQ1, 10SQ2 and 10SQ3 are square on the inside corners of the framing. MDF products greater than 26" wide or 48" high will be made with two equal panels, unless otherwise specified by the customer, except the 10SQ1 and 10SQ2 designs which are available in single panel only.
Finishing	
pgs 8.1-8.18	All available with Colourtones, primers and Prism Paints.
Options	
pgs 7.3-7.15	All designs – back-routed hand pull, distressing levels 1 and 2, sample ID label, seal coat, concealed hinge boring and Soss hinge rout only. Concealed hinge boring Pattern B not available with 10RC2.
Mullions/Frame Only	
pg 6.1-6.3	All designs - available in frame only and mullions except Slab. Standard lite mullion configurations available with Corsica, 10RC, 10RC2 and 10SQ3. Mullions not available with Slab, 10SQ1 and 10SQ2.
Matching/Complementary Drawer Fronts	
pgs 5.6-5.7	All available except 10SQ1.

1-Piece MDF Door Designs



10SQ5

matching drawer front available

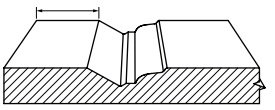

7-5/8" x 7-5/8"
Max: 48" x 96"
1-3/4" framing



10SQF1

matching drawer front available

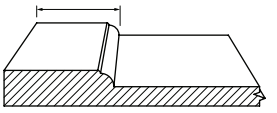

6-5/8" x 6-5/8"
Max: 42" x 96"
2-5/16" framing
Regular Bead



10SQF2

matching drawer front available

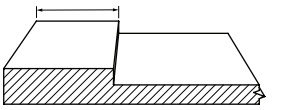

6-5/8" x 6-5/8"
Max: 42" x 96"
2-5/16" framing
Square Bead

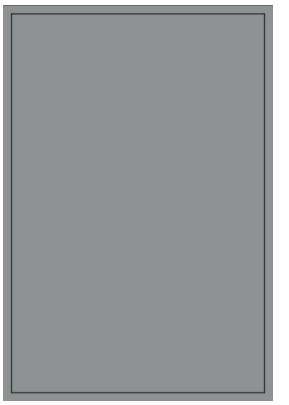

10SQF3

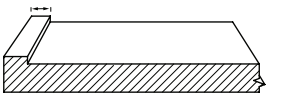

3-5/8" x 3-5/8"
Max: 48" x 96"
Inside corners have a 1/16" radius
1/2" framing
Square Bead

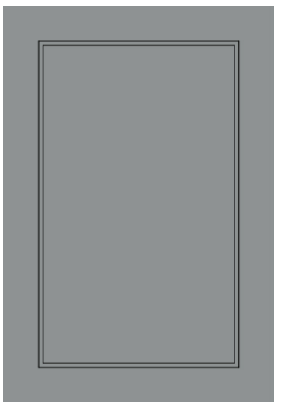

10SQF4

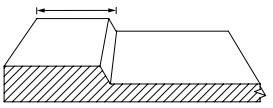

7" x 7"
Max: 48" x 96"
2-5/16" framing
F-1223 Bead

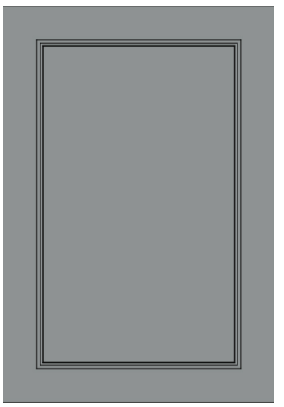

10SQF5

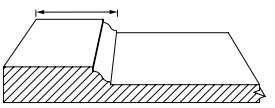

7" x 7"
Max: 48" x 96"
2-5/16" framing
Ogee Bead

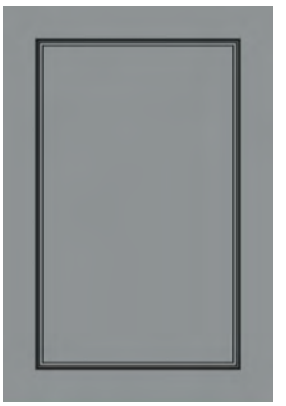

10SQF6

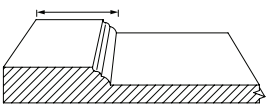

7" x 7"
Max: 48" x 96"
2-5/16" framing
F-877 Bead

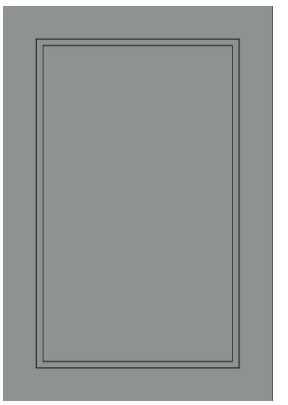

10SQF7

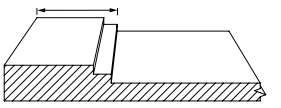

7" x 7"
Max: 48" x 96"
Inside corners have a 1/16" radius
2-5/16" framing
Double Step
Square Bead

Framing width listed is determined by measuring between the points indicated on the top edge of the cross section drawings. Note that the 10SQ5 includes only the face of the framing. All MDF products utilize TSCA/CARB2 compliant materials.

Offering And Availability

All Conestoga products are available in a wide variety of specifications to satisfy your custom needs. The information below indicates any exceptions or limitations pertaining to the designs on the previous page. For a detailed listing of a particular product specification, refer to the page indicated.

Material	
Material Pricing Guide	10SQF1, 10SQF2, 10SQF3, 10SQF4, 10SQF5, 10SQF6 and 10SQF7 – 1SGP (One Side Glueable Paintable) 3/4" MDF only. 10SQ5 – 3/4" and 1" MDF. **Note:** There is a maximum of 7 square feet for products made with 1" thick MDF. Any 1" MDF product exceeding 7 square feet will be processed through Special Designs and incur additional fees due to labor charges to safely handle these heavy items.
Edge Profiles	
pg 7.1	10SQF5 - B-2, C-2, H-2, L-059, L-149, L-253, L-382, L-686, L-803, L-1160, LC-2, Machine Edge, PRS-2 and V-2 available in 3/4" and 1", L-034 – available in 3/4" only. 10SQF3 - B-2, C-2, L-034, L-059, L-149, L-253, L-382, L-686, L-803, L-1160, LC-2, Machine Edge, PRS-2 and V-2. All other designs - B-2, C-2, H-2, L-034, L-059, L-149, L-253, L-382, L-686, L-803, L-1160, LC-2, Machine Edge, PRS-2 and V-2.
Framing Beads	
	All designs – design specific, no options available.
Panel Raises	
pg 7.2A	All designs – design specific, no options available. 10SQ5, 10SQF1, 10SQF2 10SQF4, 10SQF5 and 10SQF6 are square on the interior corners of the framing. The 10SQF3 and 10SQF7 interior corners have a 1/16" radius. MDF products greater than 26" wide or 48" high will be made with two equal panels, unless otherwise specified by the customer.
Finishing	
pgs 8.1-8.18	All available with Colourtones, primers and Prism Paints. **Note:** 10SQF1, 10SQF2, 10SQF3, 10SQF4, 10SQF5, 10SQF6 and 10SQF7- not eligible for Ebony Colourtone, Regent Blue Colourtone or Prism Paint Deeptones.
Options	
pgs 7.3-7.15	All designs – back-routed hand pull, distressing levels 1 and 2, sample ID label, seal coat, concealed hinge boring only. Concealed hinge boring Pattern B not available with 10SQ5. Soss hinge rout available on all designs except 10SQF3.
Mullions/Frame Only	
pgs 6.1-6.3	All designs - available in frame only and mullions except 10SQF3. For 10SQF3 order as 10SQF2 with a 5/32" recess.
Matching/Complementary Drawer Fronts	
pg 5.6-5.9	All available.

1-Piece MDF Door Designs



Eclipse

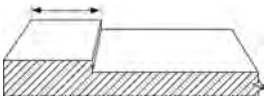

7" x 7"
Max: 48" x 96"
1-7/8" framing
Height must be equal to or greater than door width



Halo
matching drawer front available

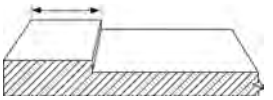

7" x 7"
Max: 48" x 96"
1-7/8" framing



Lunar
matching drawer front available

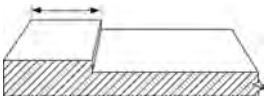

7" x 7"
Max: 48" x 96"
1-7/8" framing

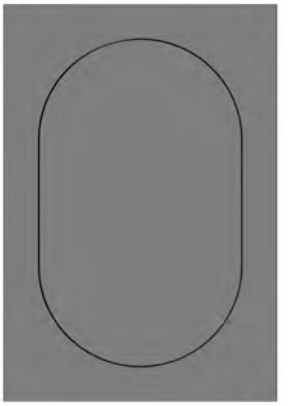

Orbit

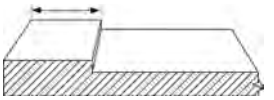

7" x 9-1/2"*
Max: 48" x 96"
1-7/8" framing
Height must be equal to or greater than door width

Framing width listed is determined by measuring between the points indicated on the top edge of the cross section drawings.
All MDF products utilize TSCA/CARB2 compliant materials.

Offering And Availability

All Conestoga products are available in a wide variety of specifications to satisfy your custom needs. The information below indicates any exceptions or limitations pertaining to the designs on the previous page. For a detailed listing of a particular product specification, refer to the page indicated.

Material	
Material Pricing Guide	Eclipse, Halo, Lunar and Orbit – 1SGP (One Side Glueable Paintable) 3/4" MDF only.
Edge Profiles	
pg 7.1	All designs - B-2, C-2, H-2, L-034, L-059, L-149, L-253, L-382, L-686, L-803, L-1160, LC-2, Machine Edge, PRS-2 and V-2.
Framing Beads	
	All designs – design specific, no options available.
Panel Raises	
pg 7.2A	All designs – design specific, no options available. Halo interior corners have 1" radius on all four interior corners. Lunar has 1" radius on top two interior corners and 1/16" radius on bottom interior corners. Eclipse top rail radius will vary by door width; bottom two interior corners have a 1/6" radius. Orbit top and bottom rail radius is dependant on door width.
Finishing	
pgs 8.1-8.18	All available with Colourtones, primers and Prism Paints.
Options	
pgs 7.3-7.15	All designs – back-routed hand pull, distressing levels 1 and 2, sample ID label, seal coat, concealed hinge boring only. Soss hinge rout available on all designs.
Mullions/Frame Only	
pgs 6.1-6.3	Eclipse, Halo and Lunar available in frame only and mullions. Orbit available in frame only. **Note:** Eclipse, Halo, Lunar, Orbit will have 2-5/16" framing.
Matching/Complementary Drawer Fronts	
pg 5.6-5.9	Halo and Lunar available. Eclipse and Orbit – Nova recomended.

1-Piece MDF Drawer Fronts



#10

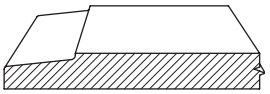

3" x 3"



Corsica

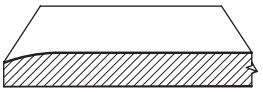

3" x 3"



Slab

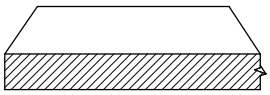

1-1/4" x 1-1/4"



10RC

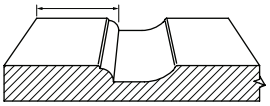

7-5/8" x 6"



10RC2

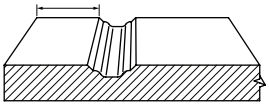

5-7/8" x 5"
1" rails
1-3/4" stiles



10SQ2

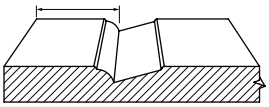

7-7/8" x 5-3/4"
1-1/4" rails
2-5/16" stiles



10SQ3

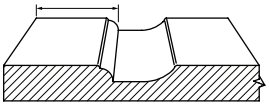

7-7/8" x 5-3/4"
1-1/4" rails
2-5/16" stiles



10SQF4

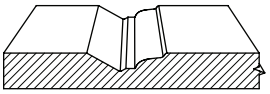

7-5/8" x 6"
3/4" rails
1-3/4" stiles



10SQF1

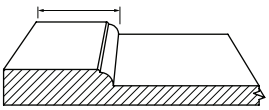

6-5/8" x 5"
1-3/16" rails
2-5/16" stiles
Regular Bead



10SQF2

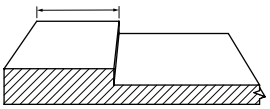

6-5/8" x 5"
1-3/16" rails
2-5/16" stiles
Square Bead

Framing width listed is determined by measuring between the points indicated on the top edge of the cross section drawings. Note that the 10RC2 and 10SQ5 include only the face of the framing. All MDF products utilize TSCA/CARB2 compliant materials.

Offering And Availability

All Conestoga products are available in a wide variety of specifications to satisfy your custom needs. The information below indicates any exceptions or limitations pertaining to the designs on the previous page. For a detailed listing of a particular product specification, refer to the page indicated.

Material	
Material Pricing Guide	10SQF1 and 10SQF2 – 3/4" 1SGP (One Side Glueable Paintable) MDF only. Corsica – 3/4" MDF only. All other designs – 3/4" and 1" MDF. **Note:** There is a maximum of 7 square feet for products made with 1" thick MDF. Any 1" MDF product exceeding 7 square feet will be processed through Special Designs and incur additional fees due to labor charges to safely handle these heavy items.
Edge Profiles	
pg 7.1	Corsica – design specific, no options available. 3/4" #10 – B-2, C-2, H-2, L-059, L-149, L-253, L-382, L-686, L-803, L-1160, LC-2, Machine Edge, PRS-2 and V-2 profiles only. All other 3/4" designs – B-2, C-2, H-2, L-034, L-059 L-149, L-253, L-382, L-686, L-803, L-1160, LC-2, Machine Edge, PRS-2 and V-2 profiles only. All 1" designs – B-2, C-2, H-2, L-059, L-149, L-253, L-382, L-686, L-803, L-1160, LC-2, Machine Edge, PRS-2 and V-2 profiles only.
Framing Beads	
	All designs – design specific, no options available.
Panel Raises	
pg 7.2A	All designs – design specific, no options available. 10RC and 10RC2 are radiused on the interior corners of the framing. 10SQ2, 10SQ3, 10SQ5, 10SQF1 and 10SQF2 have square interior corners of the framing.
Finishing	
pgs 8.1-8.18	All available with Colourtones, primers and Prism Paints. **Note:** 10SQF1 and 10SQF2- not eligible for Ebony Colourtone, Regent Blue Colourtone or Prism Paint Deeptones.
Options	
pgs 7.3-7.15	All designs – back-routed hand pull, distressing levels 1 and 2, sample ID label and seal coat.

1-Piece MDF Drawer Fronts



10SQF3

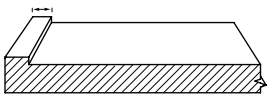

3-5/8" x 3-5/8"
1/2" rails
1/2" stiles
Square Bead
Inside corners have a
1/16" radius



10SFQ4

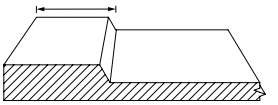

7" x 5"
1-1/4" rails
2-5/16" stiles
F-1223 Bead



10SQF5

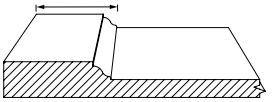

7" x 5"
1-1/4" rails
2-5/16" stiles
Ogee Bead



10SQF6

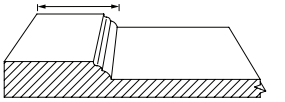

7-5/8" x 5"
1-1/4" rails
2-5/16" stiles
F-877 Bead



10SQF7

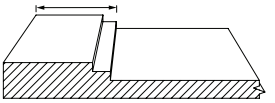

7" x 5"
1-1/4" rails
2-5/16" stiles
Double Step
Square Bead
Inside corners have a
1/16" radius



Halo

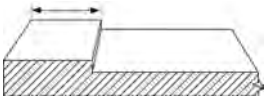

7" x 5"
1-1/4" rails
1-7/8" stiles



Lunar

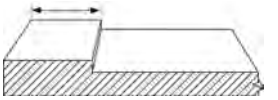

7" x 5"
1-1/4" rails
1-7/8" stiles



Nova

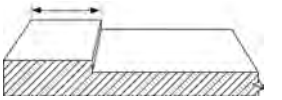

7" x 5"
1-1/4" rails
1-7/8" stiles

Framing width listed is determined by measuring between the points indicated on the top edge of the cross section drawings. All MDF products utilize TSCA/CARB2 compliant materials.

Offering And Availability

All Conestoga products are available in a wide variety of specifications to satisfy your custom needs. The information below indicates any exceptions or limitations pertaining to the designs on the previous page. For a detailed listing of a particular product specification, refer to the page indicated.

Material	
Material Pricing Guide	All designs – 3/4" 1SGP (One Side Glueable Paintable) MDF only.
Edge Profiles	
pg 7.1	All designs except 10SQF3 – B-2, C-2, H-2, L-034, L-059, L-149, L-253, L-382, L-686, L-803, L-1160, LC-2, Machine Edge, PRS-2 and V-2. 10SQF3 – B-2, C-2, L-034, L-059, L-149, L-253, L-382, L-686, L-803, L-1160, LC-2, Machine Edge, PRS-2 and V-2.
Framing Beads	
pg 7.2	All designs – design specific, no options available. 10SQF7 - Step is 3/16" deep x 3/8" wide.
Panel Raises	
pg 7.2A	All designs – design specific, no options available. 10SQF3, 10SQF7 and Nova interior corners have 1/16" radius. 10SQF4, 10SQF5 and 10SQF6 have square interior corners. Halo interior corners have a 1" radius. Lunar top interior corners have 1" radius and bottom interior corners have 1/16" radius.
Finishing	
pgs 8.1-8.18	All available with Colourtones, primers and Prism Paints.
Options	
pgs 7.3-7.15	All designs – back-routed hand pull, distressing levels 1 and 2, sample ID label and seal coat.

5-Piece MDF Doors – Mortise & Tenon Designs

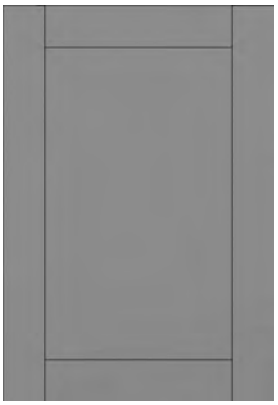

Albany
matching drawer front available

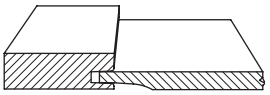

7" x 6-3/4"
2-1/4" framing
3/8" Reverse G-Cove raise shown

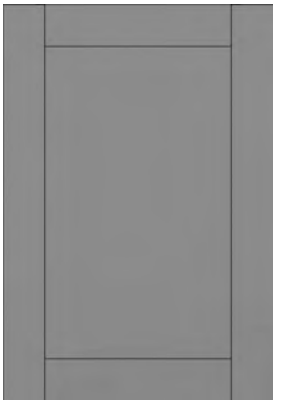

Amesbury
matching drawer front available

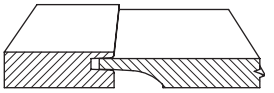

7-1/2" x 7-1/2"
2-1/4" framing
5/8" Reverse G-Cove raise shown

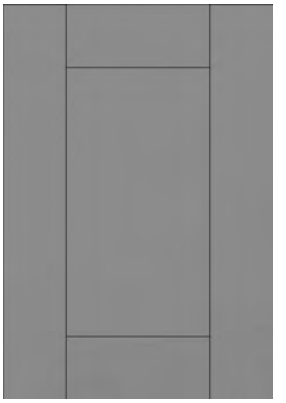

Cortland
matching drawer front available

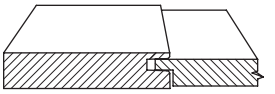

9-3/8" x 7-7/8"
3-1/2" framing
5/8" MDF Panel



CRP-10
matching drawer front available

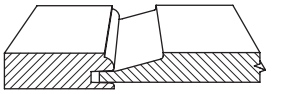

7-1/2" x 7-1/2"
2-1/4" framing
Slant raise shown



CRP-30

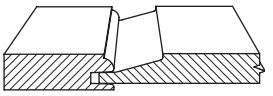

8-1/4" x 8-1/2"
2-1/4" framing
Slant raise shown



Franklin
matching drawer front available

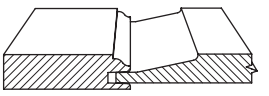

8-7/8" x 8-7/8"
2-3/4" framing
P-008 raise shown



Monarch Square
matching drawer front available

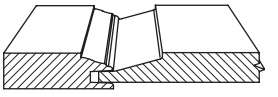

7-1/2" x 7-1/2"
2-1/4" framing
Slant raise shown

Minimums listed are based on panel raise shown and will vary by raise; see Offering and Availability for additional options. Framing width listed is determined by measuring across the back of the framing unless otherwise noted. All MDF products utilize TSCA/CARB2 compliant materials.

Offering And Availability

All Conestoga products are available in a wide variety of specifications to satisfy your custom needs. The information below indicates any exceptions or limitations pertaining to the designs on the previous page. For a detailed listing of a particular product specification, refer to the page indicated.

Material	
Material Pricing Guide	CRP-10 and CRP-30 – 3/4" and 1" MDF. All other designs – 3/4" MDF only.
Edge Profiles	
pg 7.1	All 3/4" designs – B-2, C-2, H-2, L-034, L-059, L-149, L-253, L-382, L-686, L-803, L-1160, LC-2, Machine Edge, PRS-2 and V-2 profiles only. 1" CRP-10 and 1" CRP-30 – B-2, C-2, H-2, L-059, L-149, L-253, L-382, L-686, L-803, L-1160, LC-2, Machine Edge, PRS-2 and V-2 profiles only.
Framing Beads	
pg 7.2	3/4" designs: CRP-10, CRP-30 and Franklin – all published 3/4" profiles available. 1" designs: CRP-10 and CRP-30 – Regular, Ogee and Square only. All other designs – design specific, no options available.
Panel Raises	
pg 7.2A	3/4" designs: CRP-10, CRP-30 and Franklin and Monarch Square – all published 3/4" profiles available except P-106. All other designs – design specific, no options available. 1" designs: CRP-10 and CRP-30 – Slant, G-Cove, M-Bead, P-008, P-057 and Reverse G-Cove only.
Finishing	
pgs 8.1-8.18	All available with Colourtones, primers and Prism Paints.
Options	
pgs 7.3-7.15	All designs – back-routed hand pull, concealed hinge boring, distressing levels 1 and 2, sample ID label, seal coat, framing cut down, G-012, G-015 and G-056 panel grooves, putty pin holes and Soss hinge rout only.
Mullions/Frame Only	
pgs 6.1-6.13	All designs – available in mullions and frame only. When ordering Amesbury or Cortland mullions, order as CRP-10 mullion with Square bead framing and Square bead mullion strips. Monarch Square mullions incur special lite charge. **Note:** Paint Grade Hard Maple material used for mullion lite strips and #52, #906 and #907 glass retainer mouldings.
Matching/Complementary Drawer Fronts	
pgs 5.6-5.7, 5.16-5.17	Available for Albany, Amesbury, Cortland, CRP-10, Franklin and Monarch Square.

5-Piece MDF Doors – Mortise & Tenon Designs



Monroe

matching drawer front available

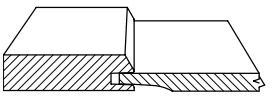

9" x 9"
2-3/4" framing
Reverse G-Cove raise shown

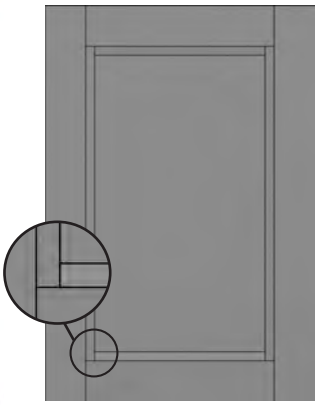

Savannah

matching drawer front available

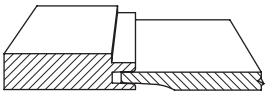

7-7/8" x 7-5/8"
2-3/4" framing
3/8" Reverse G-Cove raise shown

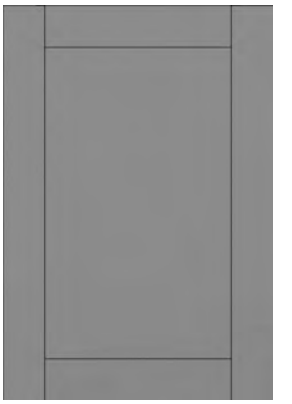

Stockbridge

matching drawer front available

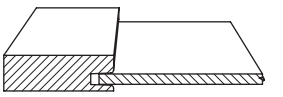

7" x 5"
2-1/4" framing
1/4" MDF Panel

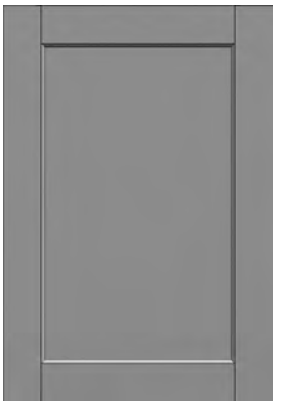

TW-10

matching drawer front available

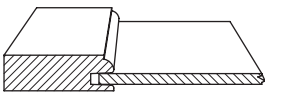

7" x 5"
2-1/4" framing
1/4" MDF Panel

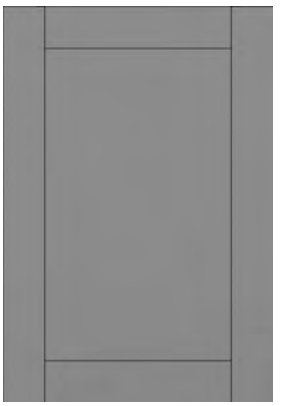

TW-1038

matching drawer front available

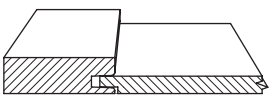

7" x 6-1/2"
2-1/4" framing
3/8" MDF Panel

Minimums listed are based on panel raise shown and will vary by raise; see Offering and Availability for additional options. Framing width listed is determined by measuring across the back of the framing unless otherwise noted. All MDF products utilize TSCA/CARB2 compliant materials.

Offering And Availability

All Conestoga products are available in a wide variety of specifications to satisfy your custom needs. The information below indicates any exceptions or limitations pertaining to the designs on the previous page. For a detailed listing of a particular product specification, refer to the page indicated.

Material	
Material Pricing Guide	All designs – 3/4" MDF only.
Edge Profiles	
pg 7.1	All designs – B-2, C-2, H-2, L-034, L-059, L-149, L-253, L-382, L-686, L-803, L-1160, LC-2, Machine Edge, PRS-2 and V-2 available in 3/4" profiles only.
Framing Beads	
pg 7.2	Monroe, TW-10 and TW-1038 - all 3/4" profiles available. Savannah and Stockbridge – design specific, no options available.
Panel Raises	
pg 7.2A	Monroe and Savannah – all 3/4" profiles available except P-106. All other designs – design specific, no options available.
Finishing	
pgs 8.1-8.18	All available with Colourtones, primers and Prism Paints.
Options	
pgs 7.3-7.15	All designs – back-routed hand pull, concealed hinge boring, distressing levels 1 and 2, sample ID label, seal coat, framing cut-down, putty pin holes and Soss hinge rout only.
Mullions/Frame Only	
pgs 6.1-6.13	All designs – available in mullions and frame only. **Note:** Paint Grade Hard Maple material used for mullion lite strips and #52, #906 and #907 glass retainer mouldings.
Matching/Complementary Drawer Fronts	
pgs 5.6-5.7, 5.16-5.17	All available.

5-Piece MDF Doors – Mortise & Tenon Designs

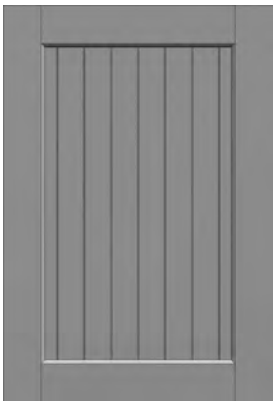

Ardmore

matching drawer front available

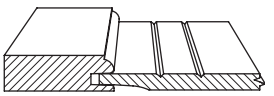

7" x 6-3/4"
2-1/4" framing
3/8" Reverse G-Cove raise shown
G-015 rout
1-1/2" spacing

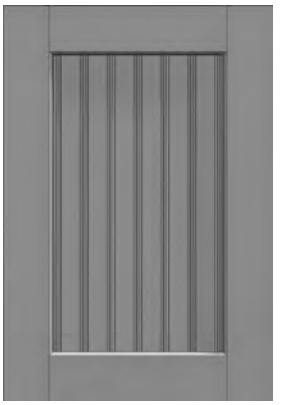

Lafayette

matching drawer front available

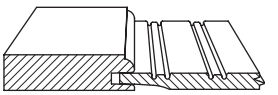

7-7/8" x 7-5/8"
2-3/4" framing
3/8" Reverse G-Cove raise shown
G-056 rout
1-1/2" spacing

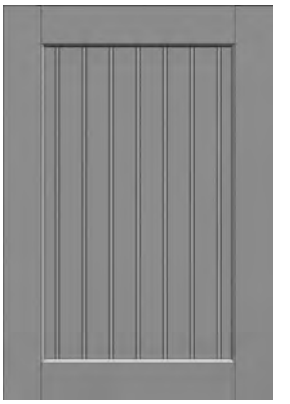

Yardley

matching drawer front available

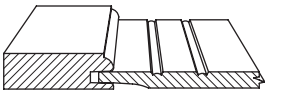

7" x 6-3/4"
2-1/4" framing
3/8" Reverse G-Cove raise shown
G-012 rout
1-1/2" spacing

Minimums listed are based on panel raise shown and will vary by raise; see Offering and Availability for additional options. Framing width listed is determined by measuring across the back of the framing unless otherwise noted. All MDF products utilize TSCA/CARB2 compliant materials.

Offering And Availability

All Conestoga products are available in a wide variety of specifications to satisfy your custom needs. The information below indicates any exceptions or limitations pertaining to the designs on the previous page. For a detailed listing of a particular product specification, refer to the page indicated.

Material	
Material Pricing Guide	All designs – 3/4" MDF only.
Edge Profiles	
pg 7.1	All designs – B-2, C-2, H-2, L-034, L-059, L-149, L-253, L-382, L-686, L-803, L-1160, LC-2, Machine Edge, PRS-2 and V-2 available in 3/4" profiles only.
Framing Beads	
pg 7.2	Ardmore, Lafayette and Yardley - all 3/4" profiles available.
Panel Raises	
pg 7.2A	All designs – design specific, no options available.
Finishing	
pgs 8.1-8.18	All available with Colourtones, primers and Prism Paints.
Options	
pgs 7.3-7.15	All designs – back-routed hand pull, concealed hinge boring, distressing levels 1 and 2, sample ID label, seal coat, framing cut-down, putty pin holes and Soss hinge rout only.
Mullions/Frame Only	
pgs 6.1-6.13	All designs – available in mullions and frame only. **Note:** Paint Grade Hard Maple material used for mullion lite strips and #52, #906 and #907 glass retainer mouldings.
Matching/Complementary Drawer Fronts	
pgs 5.6-5.7, 5.18-5.19	All available.

5-Piece MDF Drawer Fronts – Mortise & Tenon Designs



Albany

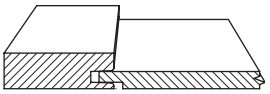

7" x 3-7/8"
1-1/2" rails
2-1/4" stiles
P-057 raise shown



Amesbury

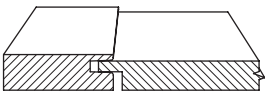

7" x 4-1/4"
1-1/2" rails
2-1/4" stiles
P-259 raise shown



Cortland

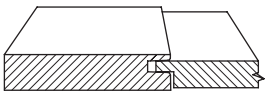

9-3/8" x 3-7/8"
1-1/2" rails
3-1/2" stiles
5/8" MDF Panel

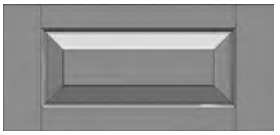

CRP-10

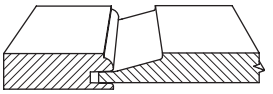

7-1/2" x 5-3/4"
1-1/2" rails
2-1/4" stiles
Slant raise shown



Franklin

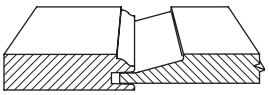

8-3/8" x 5-7/8"
1-1/2" rails
2-3/4" stiles
Slant raise shown



Monarch Square

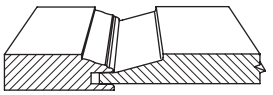

7-1/2" x 5-3/4"
1-1/2" rails
2-1/4" stiles
Slant raise shown



Monroe

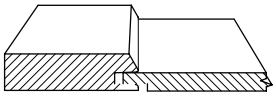

8-3/8" x 5-7/8"
1-1/2" rails
2-3/4" stiles
P-057 raise shown



Savannah

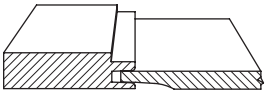

7-7/8" x 5-1/8"
1-1/2" rails
2-3/4" stiles
3/8" Reverse G-Cove raise shown



Stockbridge

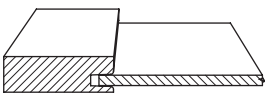

7" x 3-3/8"
1-1/2" rails
2-1/4" stiles
1/4" MDF Panel



TW-10

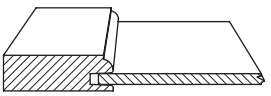

7" x 3-3/8"
1-1/2" rails
2-1/4" stiles
1/4" MDF panel



TW-1038

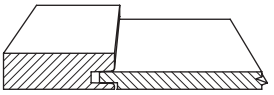

7" x 4"
1-1/2" rails
2-1/4" stiles
3/8" MDF panel

Minimums listed are based on panel raise shown and will vary by raise; see Offering and Availability for additional options. Framing width listed is determined by measuring across the back of the framing unless otherwise noted. All MDF products utilize TSCA/CARB2 compliant materials.

Offering And Availability

All Conestoga products are available in a wide variety of specifications to satisfy your custom needs. The information below indicates any exceptions or limitations pertaining to the designs on the previous page. For a detailed listing of a particular product specification, refer to the page indicated.

Material	
Material Pricing Guide	All designs – 3/4" MDF only.
Edge Profiles	
pg 7.1	All designs – B-2, C-2, H-2, L-034, L-059, L-149, L-253, L-382, L-686, L-803, L-1160, LC-2, Machine Edge, PRS-2 and V-2 available in 3/4" profiles only.
Framing Beads	
pg 7.2	CRP-10, Franklin, Monroe, TW-10 and TW-1038 – all 3/4" profiles available. Albany, Amesbury, Cortland, Monarch Square, Savannah and Stockbridge – design specific, no options available.
Panel Raises	
pg 7.2A	Albany, Amesbury, Cortland, Monroe, Stockbridge, TW-10 and TW-1038 – design specific, no options available. CRP-10, Franklin, Monarch Square and Savannah – all 3/4" profiles available except P-106.
Finishing	
pgs 8.1-8.18	All available with Colourtones, primers and Prism Paints.
Options	
pgs 7.3-7.15	All designs – back-routed hand pull, distressing levels 1 and 2, sample ID label, seal coat, G-012, G-015 and G-056 panel grooves and putty pin holes only.

5-Piece MDF Drawer Fronts – Mortise & Tenon Designs

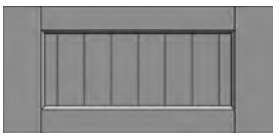

Ardmore

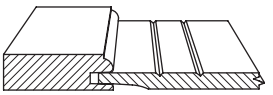

7" x 5-1/8"
1-1/2" rails
2-1/4" stiles
3/8" Reverse G-Cove raise shown
G-015 rout
1-1/2" spacing

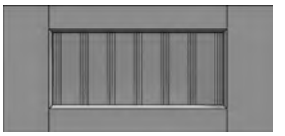

Lafayette

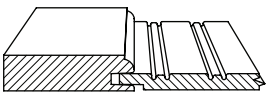

7-7/8" x 3-7/8"
1-1/2" rails
2-3/4" stiles
P-057 raise shown
G-056 rout
1-1/2" spacing

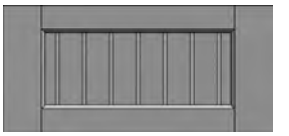

Yardley

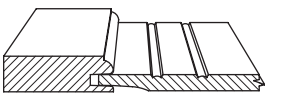

7" x 5-1/8"
1-1/2" rails
2-1/4" stiles
3/8" Reverse G-Cove raise shown
G-012 rout
1-1/2" spacing

Minimums listed are based on panel raise shown and will vary by raise; see Offering and Availability for additional options. Framing width listed is determined by measuring across the back of the framing unless otherwise noted. All MDF products utilize TSCA/CARB2 compliant materials.

Offering And Availability

All Conestoga products are available in a wide variety of specifications to satisfy your custom needs. The information below indicates any exceptions or limitations pertaining to the designs on the previous page. For a detailed listing of a particular product specification, refer to the page indicated.

Material	
Material Pricing Guide	All designs – 3/4" MDF only.
Edge Profiles	
pg 7.1	All designs – B-2, C-2, H-2, L-034, L-059, L-149, L-253, L-382, L-686, L-803, L-1160, LC-2, Machine Edge, PRS-2 and V-2 available in 3/4" profiles only.
Framing Beads	
pg 7.2	Ardmore, Lafayette and Yardley – all 3/4" profiles available.
Panel Raises	
pg 7.2A	All designs – design specific, no options available.
Finishing	
pgs 8.1-8.18	All available with Colourtones, primers and Prism Paints.
Options	
pgs 7.3-7.15	All designs – back-routed hand pull, distressing, sample ID label, seal coat and putty pin holes only.

5-Piece MDF Doors – Miter Designs



CRP-1389
matching drawer front available

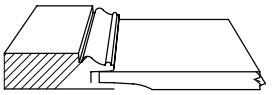

7-1/2" x 7-1/2"
2-5/16" framing
Reverse G-Cove
raise shown



CRP-1420
matching drawer front available

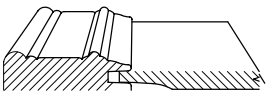

8-1/4" x 8-1/4"
2-11/16" framing
Reverse G-Cove
raise shown



CRP-10533
matching drawer front available

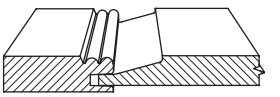

7-1/2" x 7-1/2"
2-5/16" framing
Slant raise shown

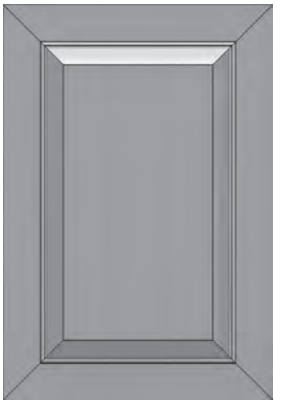

CRP-10751
matching drawer front available

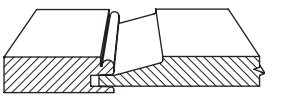

7-1/2" x 7-1/2"
2-5/16" framing
Slant raise shown



CRP-10827
matching drawer front available

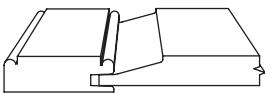

7-1/2" x 7-1/2"
2-5/16" framing
Slant raise shown



CRP-10875
matching drawer front available

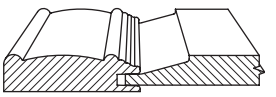

8-5/8" x 8-5/8"
2-7/8" framing
Slant raise shown

Due to construction complexity, all multiple panel miter doors will include an additional charge per middle and upright rail plus the per-panel Design Charge. Minimums listed are based on panel raise shown and will vary by raise; see Offering and Availability for additional options. Framing width listed is determined by measuring across the back of the framing unless otherwise noted. All MDF products utilize TSCA/CARB2 compliant materials.

Offering And Availability

All Conestoga products are available in a wide variety of specifications to satisfy your custom needs. The information below indicates any exceptions or limitations pertaining to the designs on the previous page. For a detailed listing of a particular product specification, refer to the page indicated.

Material	
Material Pricing Guide	All designs – 3/4" MDF only.
Edge Profiles	
pg 7.1	CRP-10533 and CRP-10751 – B-2, C-2, H-2, L-034, L-059, L-149, L-253, L-382, L-686, L-803, L-1160, LC-2, Machine Edge, PRS-2 and V-2 available in 3/4" profiles only. All other designs – design specific, no options available.
Framing Beads	
pg 7.2	All designs – design specific, no options available.
Panel Raises	
pg 7.2A	All 3/4" profiles available except P-106.
Finishing	
pgs 8.1-8.18	All available with Colourtones, primers and Prism Paints.
Options	
pgs 7.3-7.15	All designs – back-routed hand pull, concealed hinge boring, distressing levels 1 and 2, sample ID label, seal coat, G-012, G-015 and G-056 panel grooves and putty pin holes. Soss hinge rout available on all designs except CRP-10827.
Mullions/Frame Only	
pgs 6.1-6.13	All designs – available in mullions and frame only. All mullions incur special lite charges. **Note:** Paint Grade Hard Maple material used for mullion lite strips and #52, #906 and #907 glass retainer mouldings.
Matching/Complementary Drawer Fronts	
pgs 5.6-5.7, 5.24-5.25	All available.

5-Piece MDF Doors – Miter Designs



CRP-10946
matching drawer front available

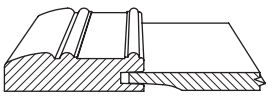

8" x 8"
2-15/16" framing
3/8" Reverse G-Cove shown



Presidential Miter
matching drawer front available

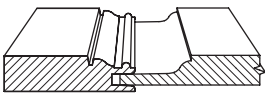

7-7/8" x 7-7/8"
2-1/2" framing
Presidential raise shown



TW-10533
matching drawer front available

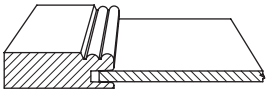

5" x 5"
2-5/16" framing
1/4" MDF Panel



TW-10751

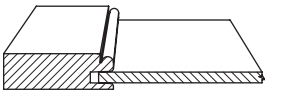

5" x 5"
2-5/16" framing
1/4" MDF Panel



TW-10827
matching drawer front available

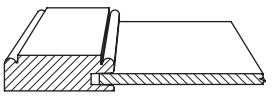

5" x 5"
2-5/16" framing
1/4" MDF Panel

Due to construction complexity, all multiple panel miter doors will include an additional charge per middle and upright rail plus the per-panel Design Charge. Minimums listed are based on panel raise shown and will vary by raise; see Offering and Availability for additional options. Framing width listed is determined by measuring across the back of the framing unless otherwise noted. All MDF products utilize TSCA/CARB2 compliant materials.

Offering And Availability

All Conestoga products are available in a wide variety of specifications to satisfy your custom needs. The information below indicates any exceptions or limitations pertaining to the designs on the previous page. For a detailed listing of a particular product specification, refer to the page indicated.

Material	
Material Pricing Guide	All designs – 3/4" MDF only.
Edge Profiles	
pg 7.1	CRP-10946 and TW-10827– design specific, no options available. All other designs – B-2, C-2, H-2, L-034, L-059, L-149, L-253, L-382, L-686, L-803, L-1160, LC-2, Machine Edge, PRS-2 and V-2 available in 3/4" profiles only.
Framing Beads	
pg 7.2	All designs - design specific, no options available.
Panel Raises	
pg 7.2A	CRP-10946 and Presidential Miter – all 3/4" profiles available except P-106. TW-10533, TW-10751 and TW-10827 – design specific, no options available.
Finishing	
pgs 8.1-8.18	All available with Colourtones, primers and Prism Paints.
Options	
pgs 7.3-7.15	CRP-10946 and TW-10827 – back-routed hand pull, concealed hinge boring, distressing levels 1 and 2, sample ID label, seal coat, G-012, G-015 and G-056 panel grooves and putty pin holes only. All other designs – back-routed hand pull, concealed hinge boring, distressing levels 1 and 2, sample ID label, seal coat, G-012, G-015 and G-056 panel grooves, putty pin holes and Soss hinge rout only.
Mullions/Frame Only	
pgs 6.1-6.13	All designs – available in mullions and frame only. CRP-10946, Presidential Miter, TW-10533, TW-10751, TW-10827 mullions incur special lite charges. **Note:** Paint Grade Hard Maple material used for mullion lite strips and #52, #906 and #907 glass retainer mouldings
Matching/Complimentary Drawer Fronts	
pgs 5.6-5.7, 5.24-5.25	All available except TW-10751.

5-Piece MDF Drawer Fronts – Miter Designs



CRP-1389

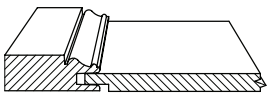

4-7/8" x 4-7/8"
2" framing
P-057 raise shown



CRP-1420

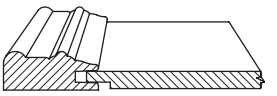

4-7/8" x 4-7/8"
2" framing
P-057 raise shown



CRP-10533

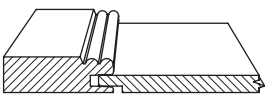

5-1/2" x 5-1/2"
2-5/16" framing
P-057 raise shown



CRP-10751

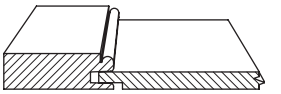

5-1/2" x 5-1/2"
2-5/16" framing
P-057 raise shown



CRP-10827

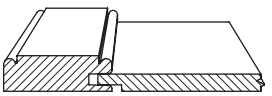

5-1/2" x 5-1/2"
2-5/16" framing
P-057 raise shown



CRP-10875

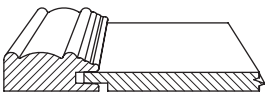

4-7/8" x 4-7/8"
2" framing
P-057 raise shown



CRP-10946

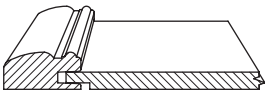

4-7/16" x 4-7/16"
1-5/8" framing
P-057 raise shown



Presidential Miter

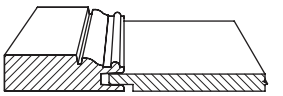

5-7/8" x 5-7/8"
2-1/2" framing
P-057 raise shown



TW-10533

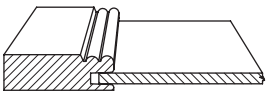

5" x 5"
2-5/16" framing
1/4" MDF Panel



TW-10827

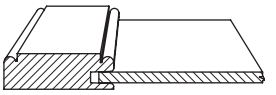

5" x 5"
2-5/16" framing
1/4" MDF Panel

Minimums listed are based on panel raise shown and will vary by raise; see Offering and Availability for additional options. Framing width listed is determined by measuring across the back of the framing unless otherwise noted. All MDF products utilize TSCA/CARB2 compliant materials.

Offering And Availability

All Conestoga products are available in a wide variety of specifications to satisfy your custom needs. The information below indicates any exceptions or limitations pertaining to the designs on the previous page. For a detailed listing of a particular product specification, refer to the page indicated.

Material	
Material Pricing Guide	All designs – 3/4" MDF only.
Edge Profiles	
pg 7.1	CRP-1389, CRP-10533, CRP-10751, Presidential Miter and TW-10533 – B-2, C-2, H-2, L-034, L-059, L-149, L-253, L-382, L-686, L-803, L-1160, LC-2, Machine Edge, PRS-2 and V-2 available in 3/4" profiles only. All other designs – design specific, no options available.
Framing Beads	
pg 7.2	All designs – design specific, no options available.
Panel Raises	
pg 7.2A	All 3/4" profiles available except P-106. TW-10533 and TW-10827 – design specific, no options available.
Finishing	
pgs 8.1-8.18	All available with Colourtones, primers and Prism Paints.
Options	
pgs 7.3-7.15	All designs – back-routed hand pull, distressing levels 1 and 2, sample ID label, seal coat, G-012, G-015 and G-056 panel grooves and putty pin holes only.

5-Piece MDF Doors – Applied Moulding Designs



CRP-10161
matching drawer front available

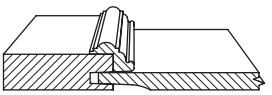

7" x 6-3/4"
2-1/4" framing
3/8" Reverse G-Cove raise shown



CRP-10797
matching drawer front available

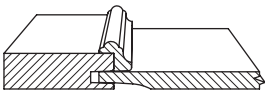

7" x 6-3/4"
2-1/4" framing
3/8" Reverse G-Cove raise shown



CRP-101728
matching drawer front available

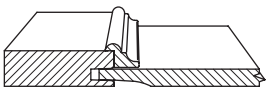

7" x 6-3/4"
2-1/4" framing
3/8" Reverse G-Cove raise shown



TW-10161
matching drawer front available

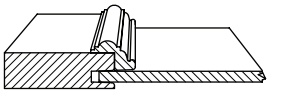

7-1/2" x 6"
2-1/4" framing
1/4" MDF panel



TW-101728
matching drawer front available

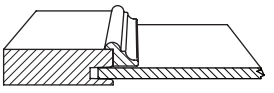

7-3/8" x 7-3/8"
2-1/4" framing
1/4" MDF panel



Wayland
matching drawer front available

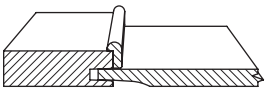

7" x 6-3/4"
2-1/4" framing
3/8" Reverse G-Cove raise shown

Note: Applied moulding designs consist of wood mouldings mounted onto framing of 5-Piece MDF doors and drawer fronts.

Minimums listed are based on panel raise shown and will vary by raise; see Offering and Availability for additional options. Framing width listed is determined by measuring across the back of the framing unless otherwise noted. All MDF products utilize TSCA/CARB2 compliant materials.

Offering And Availability

All Conestoga products are available in a wide variety of specifications to satisfy your custom needs. The information below indicates any exceptions or limitations pertaining to the designs on the previous page. For a detailed listing of a particular product specification, refer to the page indicated.

Material	
Material Pricing Guide	All designs – 3/4" MDF only.
Edge Profiles	
pg 7.1	All designs – B-2, C-2, H-2, L-034, L-059, L-149, L-253, L-382, L-686, L-803, L-1160, LC-2, Machine Edge, PRS-2 and V-2 available in 3/4" profiles only.
Framing Beads	
pg 7.2	All designs - design specific, no options available.
Panel Raises	
pg 7.2A	CRP-10161 and CRP-101728 – P-057, P-602, Presidential and Reverse G-Cove available in 3/4" profiles only. CRP-10797 and Wayland – M-Bead, P-057, P-602, Presidential, Reverse G-Cove and RM available in 3/4" profiles only. TW-10161 and TW-101728 – design specific, no options available.
Finishing	
pgs 8.1-8.18	All available with Colourtones, primers and Prism Paint.
Options	
pgs 7.3-7.15	All designs – back-routed hand pull, concealed hinge boring, distressing levels 1 and 2, sample ID label, seal coat, framing cut-down, G-012, G-015 and G-056 panel grooves, putty pin holes and Soss hinge rout only.
Mullions/Frame Only	
pgs 6.1-6.13	All designs – available in mullions and frame only. CRP-10161, CRP-10797, CRP-101728, TW-10161 and TW-101728 mullions incur special lite charges. **Note:** Paint Grade Hard Maple material used for mullion lite strips and #52, #906 and #907 glass retainer mouldings**.**
Matching/Complementary Drawer Fronts	
pgs 5.6-5.7, 5.28-5.29	All available.

5-Piece MDF Drawer Fronts – Applied Moulding Designs



CRP-10161

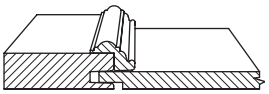

7" x 4-1/8"
1-1/2" rails
2-1/4" stiles
P-057 raise shown



CRP-10797

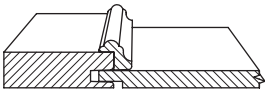

7" x 4"
1-1/2" rails
2-1/4" stiles
P-057 raise shown



CRP-101728

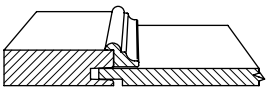

7" x 4-1/2"
1-1/2" rails
2-1/4" stiles
P-057 raise shown



TW-10161

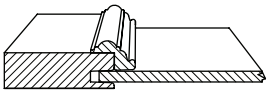

7-1/2" x 5"
1-1/2" rails
2-1/4" stiles
1/4" MDF panel



TW-101728

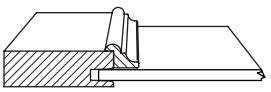

7-3/8" x 4-1/2"
1-1/2" rails
2-1/4" stiles
1/4" MDF panel



Wayland

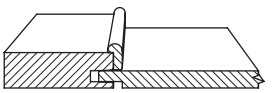

7" x 4"
1-1/2" rails
2-1/4" stiles
P-057 raise shown

Note: Applied moulding designs consist of wood mouldings mounted onto framing of 5-Piece MDF doors and drawer fronts.

Minimums listed are based on panel raise shown and will vary by raise; see Offering and Availability for additional options. Framing width listed is determined by measuring across the back of the framing unless otherwise noted. All MDF products utilize TSCA/CARB2 compliant materials.

Offering And Availability

All Conestoga products are available in a wide variety of specifications to satisfy your custom needs. The information below indicates any exceptions or limitations pertaining to the designs on the previous page. For a detailed listing of a particular product specification, refer to the page indicated.

Material	
Material Pricing Guide	All designs – 3/4" MDF only.
Edge Profiles	
pg 7.1	All designs – B-2, C-2, H-2, L-034, L-059, L-149, L-253, L-382, L-686, L-803, L-1160, LC-2, Machine Edge, PRS-2 and V-2 available in 3/4" profiles only.
Framing Beads	
pg 7.2	All designs – design specific, no options available.
Panel Raises	
pg 7.2A	CRP-10161 and CRP-101728 – P-057, P-602, Presidential and Reverse G-Cove available in 3/4" profiles only. CRP-10797 and Wayland – M-Bead, P-057, P-602, Presidential, Reverse G-Cove and RM available in 3/4" profiles only. TW-10161 and TW-101728 – design specific, no options available.
Finishing	
pgs 8.1-8.18	All available with Colourtones, primers and Prism Paints.
Options	
pgs 7.3-7.15	All designs – back-routed hand pull, distressing levels 1 and 2, sample ID label, seal coat, G-012, G-015 and G-056 panel grooves and putty pin holes only.

Allure Decorative Laminate Veneer Doors – Miter Designs



Veracruz 225
matching drawer front available

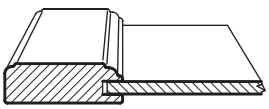

Min: 6-1/2" x 7"
Max: 36" x 80-1/2"
2-1/4" framing
6mm panel



Sorrento 225
matching drawer front available

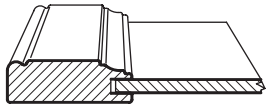

Min: 6-1/2" x 7"
Max: 36" x 80-1/2"
2-1/4" framing
6mm panel



Sorrento 300
matching drawer front available

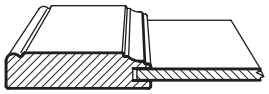

Min: 7-15/16" x 8"
Max: 36" x 80-1/2"
3" framing
6mm panel



Montego 225
matching drawer front available

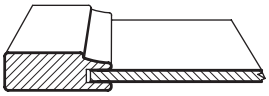

Min: 6-1/2" x 7"
Max: 36" x 90-1/2"
2-1/4" framing
6mm panel

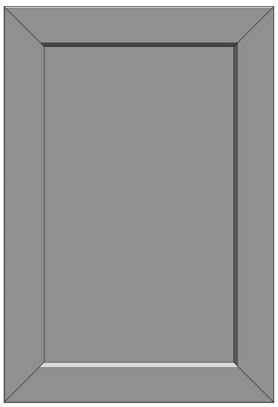

Tobago 225
matching drawer front available

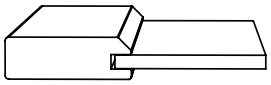

Min: 7-15/16" x 8"
Max: 36" x 80-1/2"
2-1/4" framing
6mm panel

Offering And Availability

All Conestoga products are available in a wide variety of specifications to satisfy your custom needs. The information below indicates any exceptions or limitations pertaining to the designs on the previous page. For a detailed listing of a particular product specification, refer to the page indicated.

Material Pricing	
	See chart below.
Colors	
	Veracruz 225 – Bright White in smooth texture only. Tobago 225 - Bright White, White Dove, Anthracite Matte, Black Matte, Light Grey Matte and White Matte in smooth texture only. Sorrento 225 and Sorrento 300 – White Dove in smooth texture only. Montego 225 - Canadian Grey in smooth texture; Skye in medium texture, registered and indexed pattern.
Construction/Framing	
	All designs – 3/4" thick miter construction, design specific framing beads, no options available. Edge profiles and framing widths design specific, no options available.
Panel	
	All designs – matching color and texture center panel recessed 11/32" from face of framing.
Options	
pgs 7.11-7.15	All designs – concealed hinge boring and sample ID label only. Montego 225 and Tobago 225 - Soss hinge rout.
Mullions/Frame Only	
	Mullion doors not available. Frame only – all available. Medium grey retainer moulding included (additional charge applies). Retainer moulding conceals all visible substrate, eliminating the need to paint or mask these areas. **Note:** Frame only door pricing is calculated using the Design Charge plus the actual square footage multiplied by the material square foot charge. In addition the following upcharge must be applied for retainer moulding: 1.0 to 4.0 sq. ft. 4.01 to 7.0 sq. ft. 7.01 sq. ft. or large 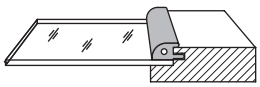 Retainer Moulding
Matching/Complementary Drawer Fronts	
pgs 5.34-5.35	All available. To achieve a smaller height drawer front, use the 2-1/4" framing drawer front with the wide frame model.

Allure DLV Material Charges (1 sq. ft. min.)	
Bright White, White Dove	
Canadian Grey	
Skye	
Anthracite Matte, Black Matte, Light Grey Matte, White Matte	

Allure Decorative Laminate Veneer Doors – Miter Designs

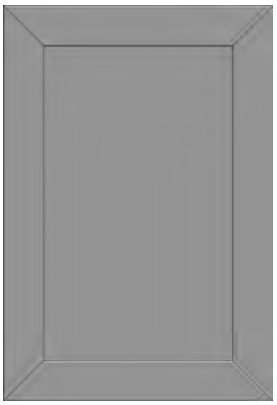

Daytona 225

matching drawer front available

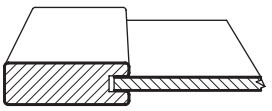

Min: 6-1/2" x 7"
Max: 36" x 80-1/2"
2-1/4" framing
6mm panel

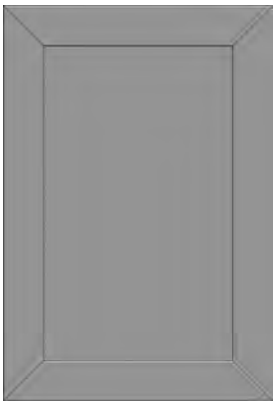

Rio 225

matching drawer front available

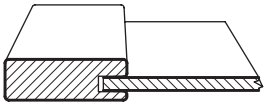

Min: 6-1/2" x 7"
Max: 36" x 90-1/2"
2-1/4" framing
6mm panel*



Rio 300

matching drawer front available

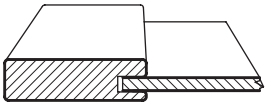

Min: 7-15/16" x 8"
Max: 36" x 90-1/2"
3" framing
6mm panel

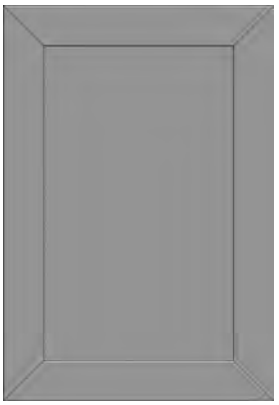

Roma 225

matching drawer front available

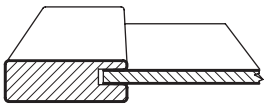

Min: 6-1/2" x 7"
Max: 36" x 90-1/2"
2-1/4" framing
6mm panel*

*Clearwater Oak, Dering Forest, Helena Walnut, Ocala Walnut, Sabine Walnut, Valley Forge Elm and White Cypress utilize 1/4" center panel material.

All Allure DLV products utilize TSCA/CARB2 compliant composite core materials.

Offering And Availability

All Conestoga products are available in a wide variety of specifications to satisfy your custom needs. The information below indicates any exceptions or limitations pertaining to the designs on the previous page. For a detailed listing of a particular product specification, refer to the page indicated.

Material Pricing	
	See chart below.
Colors	
	Daytona 225 – Bright White and White Dove in smooth texture only. Rio 300 - Canadian Grey in smooth texture; Monaco and White Chocolate in medium texture linear pattern; Skye in medium texture, registered and indexed pattern. Rio 225 and Roma 225 - Anthracite Matte, Black Matte, Canadian Grey, Light Grey Matte and White Matte in smooth texture; Clearwater Oak, Dering Forest, Helena Walnut, Monaco, Ocala Walnut, Sabine Walnut, Valley Forge Elm, White Chocolate and White Cypress in medium texture linear pattern. Skye in medium texture, registered and indexed pattern.
Construction/Framing	
	All designs – 3/4" thick miter construction, design specific framing beads, no options available. Edge profiles and framing widths design specific, no options available.
Panel	
	All designs – matching color and texture center panel. Daytona 225 - panel centered in framing; Rio 225 and Rio 300 – panel recessed 11/32" from face of framing; Roma 225 – panel recessed 3/16" from face of framing.
Options	
pgs 7.11-7.15	All designs – concealed hinge boring, Soss hinge rout and sample ID label only.
Mullions/Frame Only	
	All designs – Mullion doors not available. Frame only – available. Rio 225 and Rio 300 frame only – medium grey glass retainer moulding included (additional charge applies). Grey glass retainer moulding conceals all visible substrate, eliminating the need to paint or mask these areas. Daytona 225 and Roma 225 – does not include grey glass retainer moulding as moulding does not fit properly into these designs. **Note:** DLV frame only door pricing is calculated using the Design Charge plus the actual square footage multiplied by the material square foot charge. The following additional charge must be applied to all designs that include grey glass retainer moulding: 1.0 to 4.0 sq. ft. 4.01 to 7.0 sq. ft. 7.01 sq. ft. or larger 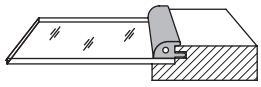 Retainer Moulding
Matching/Complementary Drawer Fronts	
pgs 5.34-5.35	All available. To achieve a smaller height drawer front, use the 2-1/4" framing drawer front with the wide frame model.

Allure DLV Material Charges (1 sq. ft. min.)	
Bright White, White Dove	
Canadian Grey, Clearwater Oak, Dering Forest, Helena Walnut, Monaco, Ocala Walnut, Sabine Walnut, Valley Forge Elm, White Chocolate, White Cypress	
Skye	
Anthracite Matte, Black Matte, Light Grey Matte, White Matte	

Allure Decorative Laminate Veneer Drawer Fronts – Miter Designs



Veracruz 225

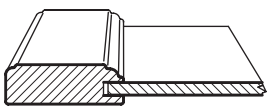

Min: 6-1/2" x 5-3/8"
Max: 80-1/2" x 36"
2-1/4" framing
6mm panel



Sorrento 225

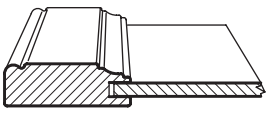

Min: 6-1/2" x 5-3/8"
Max: 80-1/2" x 36"
2-1/4" framing
6mm panel



Sorrento 300

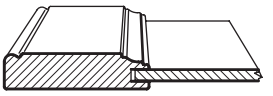

Min: 7-15/16" x 7-15/16"
Max: 80-1/2" x 36"
3" framing
6mm panel



Montego 225

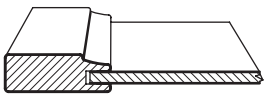

Min: 6-1/2" x 5-3/8"
Max: 90-1/2" x 36"
2-1/4" framing
6mm panel



Tobago 225

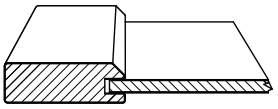

Min: 6-1/2" x 5-5/8"
Max: 80-1/2" x 36"
2-1/4" framing
6mm panel



Daytona 225

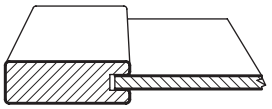

Min: 6-1/2" x 5-3/8"
Max: 80-1/2" x 36"
2-1/4" framing
6mm panel



Rio 225

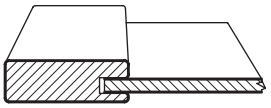

Min: 6-1/2" x 5-5/8"
Max: 90-1/2" x 36"
2-1/4" framing
6mm panel*



Rio 300

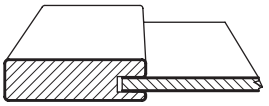

Min: 7-15/16"" x 7-15/16"
Max: 90-1/2" x 36"
3" framing
6mm panel



Roma 225

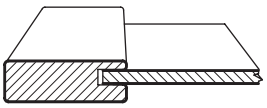

Min: 6-1/2" x 5-5/8"
Max: 90-1/2" x 36"
2-1/4" framing
6mm panel*

*Clearwater Oak, Dering Forest, Helena Walnut, Ocala Walnut, Sabine Walnut, Valley Forge Elm and White Cypress utilize 1/4" center panel material.

All Allure DLV products utilize TSCA/CARB2 compliant composite core materials.

Offering And Availability

All Conestoga products are available in a wide variety of specifications to satisfy your custom needs. The information below indicates any exceptions or limitations pertaining to the designs on the previous page. For a detailed listing of a particular product specification, refer to the page indicated.

Material Pricing	
	See chart below.
Colors	
	Veracruz 225 – Bright White in smooth texture only. Tobago 225 – Bright White, White Dove, Anthracite Matte, Black Matte, Light Grey Matte and White Matte in smooth texture only. Sorrento 225 and Sorrento 300 – White Dove in smooth texture only. Daytona 225 – Bright White and White Dove in smooth texture only. Montego 225 – Canadian Grey in smooth texture; Skye in medium texture, registered and indexed pattern. Rio 300 – Canadian Grey in smooth texture; Monaco and White Chocolate in medium texture linear pattern; Skye in medium texture, registered and indexed pattern. Rio 225 and Roma 225 – Anthracite Matte, Black Matte, Canadian Grey, Light Grey Matte and White Matte in smooth texture only; Clearwater Oak, Dering Forest, Helena Walnut, Monaco, Ocala Walnut, Sabine Walnut, Valley Forge Elm, White Chocolate and White Cypress in medium texture linear pattern only; Skye in medium texture, registered and indexed pattern only.
Construction/Framing	
	All designs – 3/4" miter construction, design specific framing beads, no options available. Edge profiles and framing widths design specific, no options available.
Panel	
	All designs – matching color and texture center panel. Daytona 225 – panel centered in framing. Montego 225, Rio 225, Rio 300, Sorrento 225, Sorrento 300, Tobago 225, and Veracruz 225 panel recessed 11/32" from face of framing. Roma 225 - panel recessed 3/16" from face of framing.
Options	
pgs 7.11-7.15	All designs – sample ID label only.

Allure DLV Material Charges (1 sq. ft. min.)	
Bright White, White Dove	
Canadian Grey, Clearwater Oak, Dering Forest, Helena Walnut, Monaco, Ocala Walnut, Sabine Walnut, Valley Forge Elm, White Chocolate, White Cypress	
Skye	
Anthracite Matte, Black Matte, Light Grey Matte, White Matte	

Allure Decorative Laminate Veneer Doors – Shaker and Slab Designs



Avalon
matching drawer front available

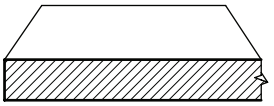

Min: 2-3/4" x 6-3/8"
Max: 46" x 96"
19mm panel



Delray 225
matching drawer front available

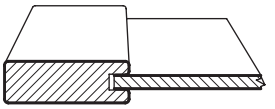

Min: 7" x 7"
Max: 36" x 80-1/2"
2-1/4" framing
6mm panel



Delray 300
matching drawer front available

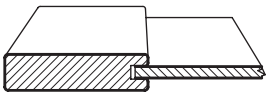

Min: 8-1/2" x 7"
Max: 36" x 80-1/2"
3" framing
6mm panel



Melbourne 225
matching drawer front available

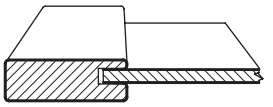

Min: 7" x 7"
Max: 36" x 98"
2-1/4" framing
6mm panel*



Boca 225
matching drawer front available

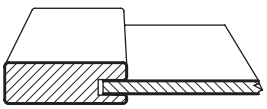

Min: 7" x 7"
Max: 36" x 98"
2-1/4" framing
6mm panel*



Boca 300
matching drawer front available

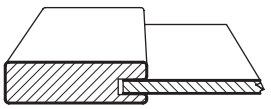

Min: 8-1/2" x 7"
Max: 36" x 98"
3" framing
6mm panel

*Clearwater Oak, Dering Forest, Helena Walnut, Ocala Walnut, Sabine Walnut, Valley Forge Elm and White Cypress utilize 1/4" center panel material.

All Allure DLV products utilize TSCA/CARB2 compliant composite core materials.

Offering And Availability

All Conestoga products are available in a wide variety of specifications to satisfy your custom needs. The information below indicates any exceptions or limitations pertaining to the designs on the previous page. For a detailed listing of a particular product specification, refer to the page indicated.

Material Pricing	
	See chart below.
Colors	
	Avalon, Delray 225 and Delray 300 – Bright White and White Dove in smooth texture only. Boca 300 – Canadian Grey in smooth texture only; Monaco and White Chocolate in medium texture linear pattern. Boca 225 and Melbourne 225 – Anthracite Matte, Black Matte, Canadian Grey, Light Grey Matte, Monaco, Skye, White Chocolate and White Matte in smooth texture; Clearwater Oak, Dering Forest, Helena Walnut, Ocala Walnut, Sabine Walnut, Valley Forge Elm, White Chocolate and White Cypress in medium texture linear pattern. Skye in medium texture, registered and indexed pattern.
Construction/Framing	
	Avalon – 3/4" edgebanded Slab only. All other designs – 3/4" thick drill and dowel construction provides mortise and tenon appearance. All designs – design specific framing beads, no options available. Edge profiles and framing widths design specific, no options available.
Panel	
	Avalon – 3/4" thick Slab. All other designs – matching color and texture center panel. Delray 225 and Delray 300 – panel centered in framing. Boca 225 and Boca 300 – panel recessed 11/32" from face of framing. Melbourne 225 – panel recessed 3/16" from face of framing.
Options	
pgs 7.11-7.15	All designs – concealed hinge boring, Soss hinge rout and sample ID label only.
Mullions/Frame Only	
	Avalon Slab – frame only and mullions not available. All 5-Piece designs – Mullion doors not available. Frame only – all available. Boca 225 and Boca 300 frame only – medium grey glass retainer moulding included (additional charge applies). Grey retainer moulding conceals all visible substrate, eliminating the need to paint or mask these areas. Delray 225, Delray 300 and Melbourne 225 frame only – do not include grey glass retainer moulding as moulding does not fit properly into these designs. **Note:** DLV frame only door pricing is calculated using the Design Charge plus the actual square footage multiplied by the material square foot charge. The following additional charge must be applied to all designs that include grey glass retainer moulding: 1.0 to 4.0 sq. ft. 4.01 to 7.0 sq. ft. 7.01 sq. ft. or larger 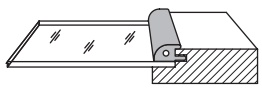 Retainer Moulding
Matching/Complementary Drawer Fronts	
pgs 5.38-5.39	All available. To achieve a smaller height drawer front, use the 2-1/4" framing drawer front with the wide frame model or the 330DW which utilizes matching stiles and 2-1/4" rails.

Allure DLV Material Charges (1 sq. ft. min.)	
Avalon - Bright White, White Dove	
Bright White, White Dove	
Canadian Grey, Clearwater Oak, Dering Forest, Helena Walnut, Monaco, Ocala Walnut, Sabine Walnut, Valley Forge Elm, White Chocolate, White Cypress	
Skye	
Anthracite Matte, Black Matte, Light Grey Matte, White Matte	

Allure Decorative Laminate Veneer Drawers – Shaker and Slab Designs



Avalon

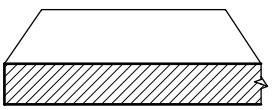

Min: 6-3/8" x 2-3/4"
Max: 96" x 46"
19mm panel



Delray 225

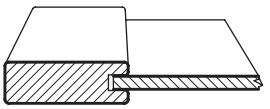

Min: 7" x 5-3/8"
Max: 80-1/2" x 36"
2-1/4" framing
6mm panel



Delray 300

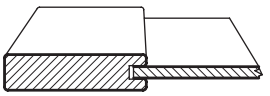

Min: 8-1/2" x 6-3/4"
Max: 80-1/2" x 36"
3" framing
6mm panel



Delray 330

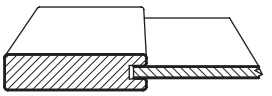

Min: 8-1/2" x 5-3/8"
Max: 80-1/2" x 36"
2-1/4" rails
3" stiles
6mm panel



Boca 225

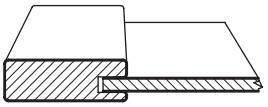

Min: 7" x 5-3/8"
Max: 98" x 36"
2-1/4" framing
6mm panel*



Boca 300

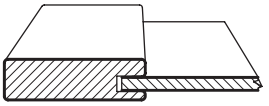

Min: 8-1/2" x 6-3/4"
Max: 98" x 36"
3" framing
6mm panel



Boca 330

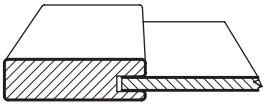

Min: 8-1/2" x 5-3/8"
Max: 98" x 36"
2-1/4" rails
3" stiles
6mm panel



Melbourne 225

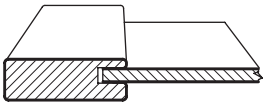

Min: 7" x 5-3/8"
Max: 98" x 36"
2-1/4" framing
6mm panel*

*Clearwater Oak, Dering Forest, Helena Walnut, Ocala Walnut, Sabine Walnut, Valley Forge Elm and White Cypress utilize 1/4" center panel material.

All Allure DLV products utilize TSCA/CARB2 compliant composite core materials.

Offering And Availability

All Conestoga products are available in a wide variety of specifications to satisfy your custom needs. The information below indicates any exceptions or limitations pertaining to the designs on the previous page. For a detailed listing of a particular product specification, refer to the page indicated.

Material Pricing	
	See chart below.
Colors	
	Avalon, Delray 225, Delray 300 and Delray 330 – Bright White and White Dove in smooth texture only. Boca 300 – Canadian Grey in smooth texture only; Monaco and White Chocolate in medium texture linear pattern. Boca 330 – Canadian Grey in smooth texture only; Monaco and White Chocolate in medium texture linear pattern; Skye in medium texture, registered and indexed pattern. Boca 225 and Melbourne 225 – Anthracite Matte, Black Matte, Canadian Grey, Light Grey Matte and White Matte in smooth texture; Clearwater Oak, Dering Forest, Helena Walnut, Ocala Walnut, Sabine Walnut, Monaco, Valley Forge Elm, White Chocolate and White Cypress in medium texture linear pattern. Skye in medium texture, registered and indexed pattern.
Construction/Framing	
	Avalon – 3/4" edgebanded Slab only. All other designs – 3/4" thick drill and dowel construction provides mortise and tenon appearance. All designs – design specific framing beads, no options available. Edge profiles and framing widths design specific, no options available.
Panel	
	Avalon – 3/4" thick Slab. All other designs – matching color and texture center panel. Delray 225, Delray 300 and Delray 330 – panel centered in framing. Boca 225, Boca 300 and Boca 330 – panel recessed 11/32" from face of framing. Melbourne 225 – panel recessed 3/16" from face of framing.
Options	
pgs 7.11-7.15	All designs – sample ID label only.

Allure DLV Material Charges (1 sq. ft. min.)	
Avalon - Bright White, White Dove	
Bright White, White Dove	
Canadian Grey, Clearwater Oak, Dering Forest, Helena Walnut, Monaco, Ocala Walnut, Sabine Walnut, Valley Forge Elm, White Chocolate, White Cypress	
Skye	
Anthracite Matte, Black Matte, Light Grey Matte, White Matte	

Allure Decorative Laminate Veneer Doors – French Cut Shaker Design



Cabo 225

matching drawer front available

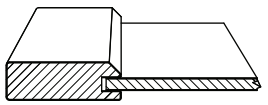

Min: 7" x 7"
Max: 36" x 80-1/2"
2-1/4" framing
6mm panel

All Allure DLV products utilize TSCA/CARB2 compliant composite core materials.

Offering And Availability

All Conestoga products are available in a wide variety of specifications to satisfy your custom needs. The information below indicates any exceptions or limitations pertaining to the designs on the previous page. For a detailed listing of a particular product specification, refer to the page indicated.

Material Pricing	
	See chart below.
Colors	
	Cabo 225 - Bright White, White Dove, Anthracite Matte, Black Matte, Light Grey Matte and White Matte in smooth texture.
Construction/Framing	
	3/4" thick drill and dowel construction, with mitered framing bead, provides a mortise and tenon appearance. Design specific framing bead, no options available. Edge profile and framing width design specific, no option available.
Panel	
	Matching color and texture center. Panel recessed 11/32" from face of framing.
Options	
pgs 7.11-7.15	Concealed hinge boring, Soss hinge rout and sample ID label only.
Mullions/Frame Only	
	Mullion doors not available. Frame only – all available. Medium grey glass retainer moulding included (additional charge applies). Retainer moulding conceals all visible substrate, eliminating the need to paint or mask these areas. **Note:** Frame only door pricing is calculated using the Design Charge plus the actual square footage multiplied by the material square foot charge. In addition the following upcharge must be applied for glass retainer moulding: 1.0 to 4.0 sq. ft 4.01 to 7.0 sq. ft. 7.01 sq. ft. or larger 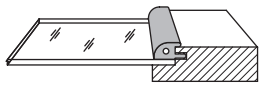 Retainer Moulding
Matching/Complementary Drawer Fronts	
pg 5.42-5.43	All available.

Allure DLV Material Charges (1 sq. ft. min.)	
Bright White, White Dove	
Anthracite Matte, Black Matte, Light Grey Matte, White Matte	

Allure Decorative Laminate Veneer Drawer Fronts– French Cut Shaker Design

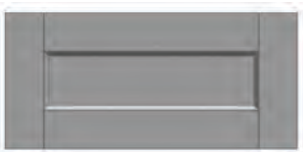

Cabo 225

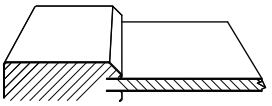

Min: 7" x 5-3/8"
Max: 40" x 36"
2-1/4" rails
2-1/4" stiles
6mm panel

All Allure DLV products utilize TSCA/CARB2 compliant composite core materials.

Offering And Availability

All Conestoga products are available in a wide variety of specifications to satisfy your custom needs. The information below indicates any exceptions or limitations pertaining to the designs on the previous page. For a detailed listing of a particular product specification, refer to the page indicated.

Material Pricing	
	See chart below.
Colors	
	Cabo 225 - Bright White, White Dove, Anthracite Matte, Black Matte, Light Grey Matte and White Matte in smooth texture.
Construction/Framing	
	3/4" thick drill and dowel construction with a mitered bead provides mortise and tenon appearance. Design specific framing bead, no options available. Edge profile design specifc, no option available.
Panel	
	Matching color and texture center panel. Panel recessed 11/32" from face of framing.
Options	
pgs 7.11-7.15	All designs – sample ID label only.

Allure DLV Material Charge (1 sq. ft. min.)	
Bright White, White Dove	
Anthracite Matte, Black Matte, Light Grey Matte, White Matte	

Allure DLV Accessories

Complementary accessories to fabricate casework and ancillary items are available in matching color DLV components. Due to the different manufacturing processes, colors, textures and sheen levels will vary slightly. These minor variations will not be considered defective.

Allure DLV Mouldings

- Bright White, Clearwater Oak, Dering Forest, Helena Walnut, Ocala Walnut, Sabine Walnut, Valley Forge Elm, White Cypress, White Dove – 96" in length.
- Canadian Grey, Monaco, Skye and White Chocolate – 107" in length except Light Rail, which is 96" in length.

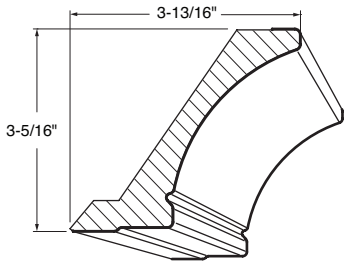

Cove Crown w/heel

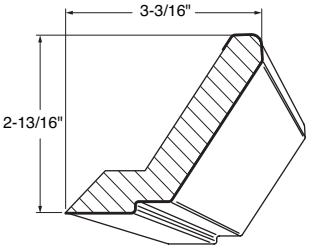

Shaker Crown w/heel

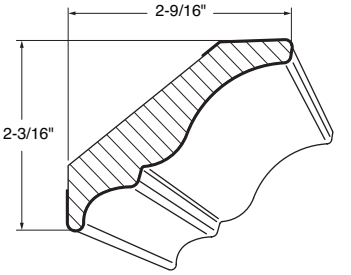

Traditional Crown

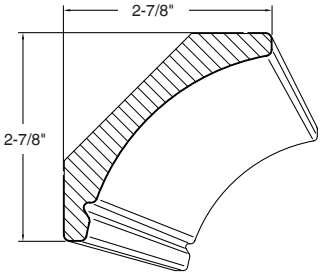

Contemporary Crown

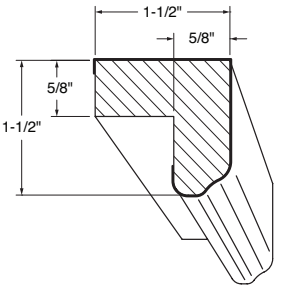

Light Rail w/heel

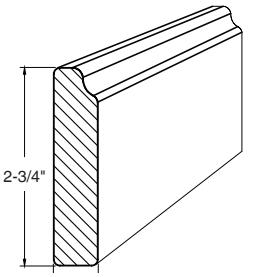

Light Shield

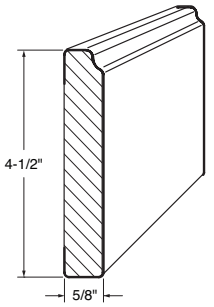

Baseboard

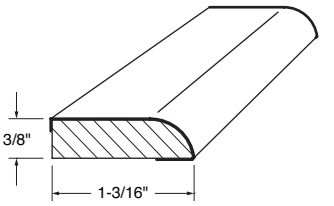

Scribe

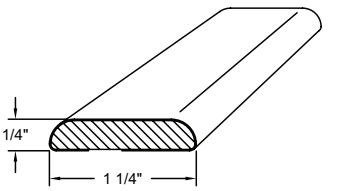

Batten

	Canadian Grey, Monaco, White Chocolate	Bright White, White Dove	Skye	Clearwater Oak, Dering Forest, Helena Walnut, Ocala Walnut, Sabine Walnut, Valley Forge Elm, White Cypress
Cove Crown w/heel	✔	✔	✔	NA
Shaker Crown w/heel	✔	✔	✔	NA
Traditional Crown	✔	✔	✔	NA
Light Rail w/heel	✔	✔	✔	NA
Scribe	✔	✔	✔	NA
Baseboard	✔	✔	✔	NA
Contemporary Crown	NA	NA	NA	✔
Light Shield	NA	NA	NA	✔
Batten	NA	NA	NA	✔

Please refer to pricing through Con-Nex, our online ordering program

Allure DLV Accessories (continued)

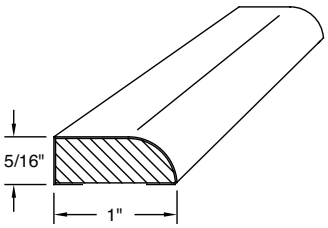

Matte Scribe

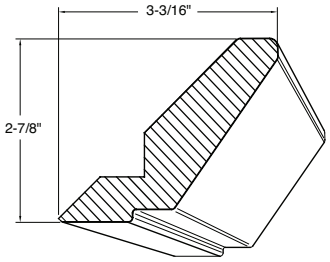

Matte Shaker Crown w/heel

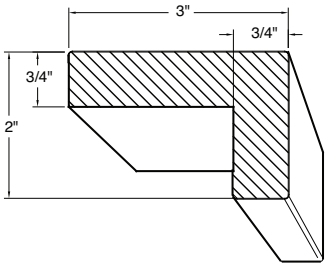

Matte Light Rail

96" Moulding	Anthracite Matte, Black Matte, Light Grey Matte, White Matte
Matte Scribe	✔
Matte Shaker Crown w/heel	✔
Matte Light Rail	✔

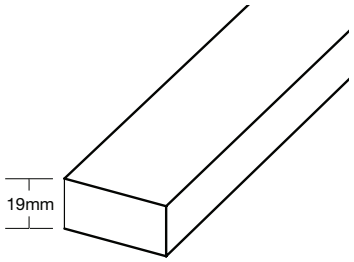

Allure DLV Filler

- Allure Filler (19mm thick) can be utilized as a functional filler, or applied as a full overlay trim application.
- All edges are banded with matching edgeband – no options.
- Filler width can be customized in 1/16" increments.
- Minimum size – all colors 2-3/4" x 6-3/8".
- Maximum size – Bright White, White Dove – 46" x 96".
- Maximum size – Anthracite Matte, Black Matte, Light Grey Matte, White Matte – 47-1/2" x 96".
- Maximum size – Canadian Grey, Clearwater Oak, Dering Forest, Helena Walnut, Sabine Walnut, Valley Forge Elm, White Chocolate and White Cypress – 34-1/2" x 96" vertical grain.
- Anthracite Matte, Black Matte, Bright White, Light Grey Matte, White Dove and White Matte fillers are manufactured using 19mm board. Canadian Grey, Clearwater Oak, Dering Forest, Helena Walnut, Sabine Walnut, Skye, Valley Forge Elm, White Chocolate and White Cypress fillers are manufactured using 6mm DLV center panel material sandwiched to 1/2" MDF, then edgebanded. Back of fillers using sandwiched construction method is raw MDF.

Allure DLV Filler (1.5 sq. ft. min.)		
Color	**Design Charge**	**Material Charge** (per sq. ft.)
Bright White, White Dove		
Canadian Grey, Clearwater Oak, Dering Forest, Helena Walnut, Monaco, Ocala Walnut, Sabine Walnut, Valley Forge Elm, White Chocolate, White Cypress		
Skye		
Anthracite Matte, Black Matte, Light Grey Matte, White Matte		

Allure DLV Accessories (continued)

DLV Veneers

- DLV veneers are .8mm thick with a phenolic backer.
- One end and one side are guaranteed to be free from physical damage.
- Per manufacturer's recommendations, veneers should be unrolled, placed flat and allowed to acclimate 48 hours prior to application.
- Available with PSA backer option - upcharge and additional lead-time applies.
- 3 day lead-time.

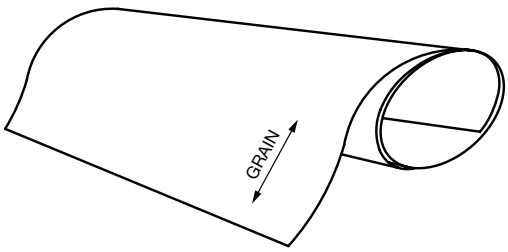

Allure DLV Veneers	
	Size
Bright White	48-1/2" x 120"
Canadian Grey, White Chocolate, White Dove	48-1/2" x 96-1/2"
Skye	60" x 108"
Anthracite Matte, Black Matte, Light Grey Matte, White Matte	48" x 120"
Clearwater Oak, Dering Forest, Helena Walnut, Ocala Walnut, Sabine Walnut, Valley Forge Elm and White Cypress	48" x 96"

PSA Backer Option

DLV veneers can be ordered with a PSA (Pressure Sensitive Adhesive) backer option. Veneers will be shipped with the PSA adhesive layer protected by a peel coat covering that must be removed prior to application.

- PSA upcharge for Canadian Grey, Clearwater Oak, Dering Forest, Helena Walnut, Ocala Walnut, Sabine Walnut, Valley Forge Elm, White Chocolate, White Cypress and White Dove
- PSA upcharge for Anthracite Matte, Black Matte, Bright White, Light Grey Matte, White Matte and Skye
- PSA layer is a .1mm thick 3M clear pressure transfer adhesive membrane.
- PSA layer will be applied within 1/4" from one long edge the entire length of the veneer sheet.
- Adhesive width on veneer back is 48", regardless of veneer width.
- One end and one side are guaranteed to be free from physical damage.
- Per manufacturer's recommendations, veneers should be unrolled, placed flat and allowed to acclimate 48 hours prior to application.
- PSA veneers should not be applied to bare solid wood or surfaces covered with sanding sealers, high pressure laminates, melamine or other plastic materials.
- Conestoga is not liable for product failure due to improper surface preparation or installation technique.
- Add 4 days to the veneer lead-time.

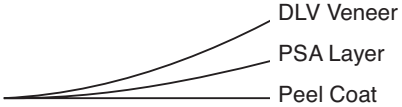

Please refer to pricing through Con-Nex, our online ordering program

Allure DLV Accessories (continued)

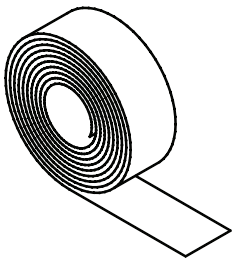

Edgeband Rolls

- Matching color edgeband available in full rolls or 125' increments
- Bright White, Canadian Grey, Clearwater Oak, Dering Forest, Helena Walnut, Monaco, Ocala Walnut, Sabine Walnut, Skye, Valley Forge Elm, White Chocolate, White Cypress and White Dove– 1mm thick PVC material available in matching colors.
- Anthracite Matte, Black Matte, Light Grey Matte and White Matte – 1mm thick ABS material available in matching colors.
- Full rolls of PVC edgeband are 15/16" wide x 300' in length.
- Full rolls of Super Matte ABS edgeband are 15/16" wide x 300' in length.

Allure DLV Edgeband Rolls		
	Length	List Price
Bright White	125'	
	300'	
Canadian Grey	125'	
	300'	
Skye, White Dove, Clearwater Oak, Dering Forest, Helena Walnut, Ocala Walnut, Sabine Walnut, Valley Forge Elm, White Cypress	125'	
	300'	
Monaco	125'	
	300'	
White Chocolate	125'	
	300'	
Anthracite Matte, Black Matte, Light Grey Matte, White Matte	125'	
	300'	

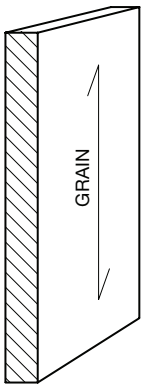

Cut-To-Size 6mm & 19mm Panels

- Design Charge.
- 6mm* and 19mm thickness – 1 sq. ft. min. charge applies, regardless of actual size.
- Non-edgebanded panel: 6mm and 19mm panel minimum size - 2-1/2" x 2-1/2".
- 6mm* panel maximum: 48" x 96" (vertical grain).
- 19mm panel maximum: Bright White and White Dove - 46" x 109". Anthracite Matte, Black Matte, Light Grey Matte and White Matte - 48" x 96".
- Oversize packaging fee of net applies to panels 36" and larger in width and length, or 84" and larger in either width or length.

Edgeband Option

- 19mm thickness only.
- 1mm matching edgeband applied to 1 to 4 edges, Design Charge per panel - Bright White and White Dove; Design Charge per panel -Anthracite Matte, Black Matte, Light Grey Matte and White Matte, regardless of number of edges receiving edgeband.
- Edgebanded panel: minimum size - 2-3/4" x 6-3/8".
- Maximum size - Bright White and White Dove - 46" x 96"; Anthracite Matte, Black Matte, Light Grey Matte and White Matte - 47-1/2" x 96".

Allure DLV Cut-To-Size Panels (per sq. ft.)				
	Non-Edgebanded		Edgebanded	
Color	6mm Thick	19mm Thick	6mm Thick	19mm Thick
Canadian Grey, Clearwater Oak, Dering Forest, Helena Walnut, Monaco, Ocala Walnut, Sabine Walnut, Valley Forge Elm, White Chocolate, White Cypress		NA	NA	NA
Bright White, White Dove			NA	
Skye			NA	
Anthracite Matte, Black Matte, Light Grey Matte, White Matte			NA	

* Clearwater Oak, Dering Forest, Helena Walnut, Ocala Walnut, Sabine Walnut, Valley Forge Elm and White Cypress utilize 1/4" center panel material.

Allure DLV Accessories (continued)

Full Sheets

- Oversize packaging fee net applies to each full sheet.

Allure DLV Full Sheets		
	Size	List Price
Canadian Grey, Monaco, White Chocolate,	6mm x 49" x 97"	
Bright White, White Dove	6mm x 49" x 97"	
Skye	6mm x 49" x 97"	
Anthracite Matte, Black Matte, Light Grey Matte, White Matte	6mm x 48" x 110"	
Clearwater Oak, Dering Forest, Helena Walnut, Ocala Walnut, Sabine Walnut, Valley Forge Elm, White Cypress	1/4" x 49" x 97"	

Allure DLV Touch Up Kits

Allure DLV material is resistant to surface scratches, dents and normal wear. For care of minor surface abrasions, Touch Up Kits have been carefully matched for each Allure color.

- Kit includes a color marker and fil-stick.
- Order kit by color from chart below.

Allure DLV Touch Up Kits			
Anthracite Matte	Dering Forest	Sabine Walnut	White Dove
Black Matte	Helena Walnut	Skye	White Matte
Bright White	Light Grey Matte	Valley Forge Elm	
Canadian Grey	Monaco	White Chocolate	
Clearwater Oak	Ocala Walnut	White Cypress	

Moulding Cut-Down Option

To combat the exorbitant fees freight carriers are charging for packages 96" or longer, Conestoga offers an option to cut-down any of our mouldings to 90". This includes both trimming of the moulding to length and creating the associated packaging.

- net upcharge per piece.
- To order specify "Cut-Down to 90 inch" Option.

Product Care

Allure DLV products should be cleaned using a mild non-abrasive detergent and damp sponge or cloth. Avoid using abrasive cleaners, brushes, rags or cloths and never saturate DLV products with water or other liquids.

1-Year Limited Warranty

For a period of 1-year from the date of shipment, Allure products will be reasonably free of defects in materials and workmanship. When properly handled, Allure products will conform, within acceptable tolerances, to applicable manufacturing specifications. This limited warranty applies only to those Allure products which are stored, handled, and installed in the manner consistent with Conestoga's wood components. Conestoga will not be responsible or liable for any indirect, consequential or incidental damages or cost sustained by the user.

Allure Complementary Melamine/Paint/Laminates				
	Bright White	**White Dove**	**Canadian Grey**	**Skye**
TFL/Melamine Board				
TFL Brand	Licar		Uniboard	
TFL Name	NA	NA	Canadian Grey (168)	Skye (H54)
CWS Paint				
Paint Match	Arctic White Colourtone	Frosty White Colourtone	DLV Canadian Grey	NA
Laminate				
Formica	NA	NA	NA	NA
Nevamar	NA	Smoky White S7027	Neutral Gray S6012	NA
Pionite	Ice White SW813 Textured Suede	NA	Dolphin Gray SG246 Textured Suede	NA
Wilsonart	Linen D427	NA	Dove Grey D92	Phantom Pearl 8211K

	Monaco	**White Chocolate**	**Anthracite Matte**	**Black Matte**	**Light Grey Matte**	**White Matte**
TFL/Melamine Board						
TFL Brand	Tafisa		Licar			
TFL Name	Monaco (L496)	White Chocolate (L492)	Anthracite (22099)	Black (25066)	Light Grey (25019)	White (25391)
CWS Paint						
Paint Match	NA	NA	NA	NA	NA	NA
Laminate						
Formica	Black Riftwood 6414	NA	NA	NA	NA	NA
Nevamar	Giant Gray Bamboo WX1150	Simplicity WO7100	NA	NA	NA	NA
Pionite	NA	NA	NA	NA	NA	NA
Wilsonart	Skyline Walnut 7964K	NA	Charcoal Velvet 15504	Black Velvet 15505	Silver Velvet 15503	Snow White Velvet 15501
Panolam	NA	NA	NA	NA	NA	White Diamond SW8900 Flawless

	Clearwater Oak	**Ocala Walnut**	**Dering Forest**	**White Cypress**	**Valley Forge Elm**	**Helena Walnut**	**Sabine Walnut**
TFL/Melamine Board							
TFL Brand	Wilsonart						
TFL Name	Clearwater Oak 8247	Ocala Walnut 8256	Dering Forest 8226	White Cypress 7976	Valley Forge Elm 8231	Helena Walnut 8252	Sabine Walnut 8254

Thermally Textured Surface Doors & Drawer Fronts

The Intrigue TTS collection offers an array of patterns consisting of solid colors along with realistic woodgrain appearances and textures. This product line exhibits a high level of durability, at multiple aggressive price points. Intrigue products provide dimensional stability as well as resistance to scratching, rub marks and abrasions.



Intrigue Slab

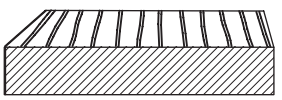

Min: 2-3/4" x 6-3/8" (vertical grain)

Max: 48" x 96" (vertical grain)

Min: 6-3/8" x 2-3/4" (horizontal grain)

Max: 96" x 48" (horizontal grain)

Vertical grain standard on door and drawer front.

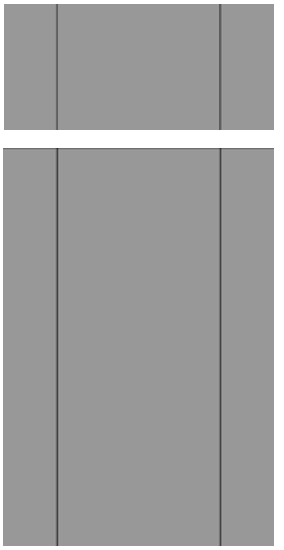

Intrigue 3-Piece

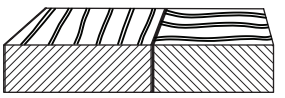

Min: 8-3/4" x 5-3/4" (horizontal grain panel)

Max: 96" x 48" (horizontal grain panel)

3" framing

Horizontal grain standard on panel only, no option.

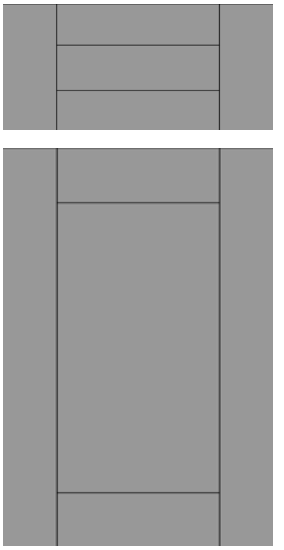

Intrigue 5-Piece

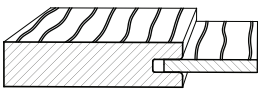

Door Min: 8-3/4" x 7" (vertical grain standard)

Drawer Min: 8-3/4" x 5-3/4" (horizontal grain standard)

Door Max: 48" x 96" (vertical)

Door Min: 8-3/4" x 7" (horizontal grain, optional)

Drawer Min: 8-3/4" x 5-3/4" (vertical grain, optional)

Drawer Max: 96" x 48" (horizontal)

Door: 3" framing

Drawer: 2-1/4" rails
3" stiles

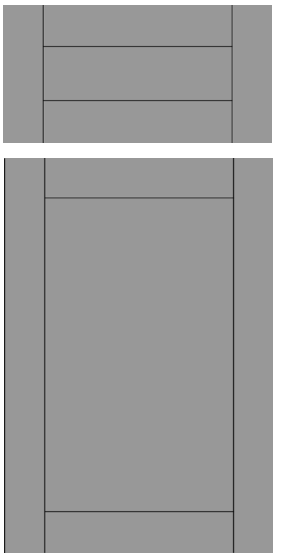

Intrigue Slim 5-Piece

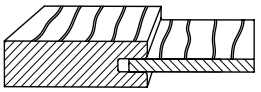

Door Min: 7-1/4" x 7" (vertical grain standard)

Drawer Min: 7-1/4" x 5-3/4" (horizontal grain standard)

Door Max: 45" x 96" (vertical)

Door Min: 7-1/4" x 7" (horizontal grain, optional)

Drawer Min: 7-1/4" x 5-3/4" (vertical grain, optional)

Drawer Max: 96" x 45" (horizontal)

Door: 2-1/4" framing

Drawer: 2-1/4" rails
2-1/4" stiles

Intrigue TTS Material Charges (1.5 sq. ft. min.)				
	Slab	3-Piece	5-Piece	Slim 5-Piece
Carbon Frozen Wood (H1292)				
Grey Vicenza Oak (H3158)				
Natural Carini Walnut (H3710)				
Stone Grey Frozen Wood (H1288)				
White Frozen Wood (H1290)				
Coastal White (W1050)				
Fog Grey (U779)				

All Intrigue TTS products utilize TSCA/CARB2 compliant composite core materials.

Offering And Availability

All Conestoga products are available in a wide variety of specifications to satisfy your custom needs. The information below indicates any exceptions or limitations pertaining to the designs on the previous page. For a detailed listing of a particular product specification, refer to the page indicated.

Intrigue TTS Color Selections	
	See Color Availability and Pricing Chart on previous page.
Edge Profiles	
	Design specific – 0.8mm matching color ABS edgeband has slightly eased edges.
Options	
pgs 5.56, 7.11-7.15	All designs – concealed hinge boring, Soss hinge boring and sample ID label. Vertical grain direction standard on Slab door and drawer front. Horizontal grain panel standard on 3-Piece door and drawer front; vertical grain panel not available. Slim 5-Piece and 5-Piece doors; vertical grain panel standard, horizontal grain panel option available. Horizontal grain panel standard on Slim 5-Piece and 5-Piece drawer front; vertical grain panel option available. Sequential grain matching available on Slab design only; Sequential Grain Match Order Form located in Order Forms Section of manual. Multi-panel doors available in Slim 5-Piece and 5-Piece designs only. Multi-panel maximum size is 48" x 96". Midrail minimum width is 3" regardless of design selected.
Mullions/Frame Only	
	Mullions not available. Frame only doors available in all Intrigue colors eligible for Slim 5-Piece and 5-Piece design. A medium grey retainer moulding is automatically included (additional charge applies). The retainer moulding covers the raw substrate, eliminating the need to paint or mask visible substrate. **Note:** Frame only door pricing is calculated using a (list) Design Charge, plus the actual square footage of the door multiplied by the material square foot charge. In addition the following upcharge must be added: 1.0 to 4.0 sq. ft. 4.01 to 7.0 sq. ft. 7.01 sq. ft. or larger 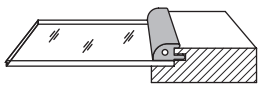 Retainer Moulding
Accessories	
pgs 5.57-5.62	Veneers, Edgeband Rolls, Mouldings, Cut-to-Size Panels (1/4" & 19mm), Full Sheets (1/4" & 19mm), Touch Up Kits.

Thermally Textured Surface Doors & Drawer Fronts

The Intrigue TTS Terrace design offers an array of patterns consisting of realistic woodgrain appearances and textures. This product line exhibits a high level of durability providing dimensional stability as well as resistance to scratching, rub marks and abrasions.

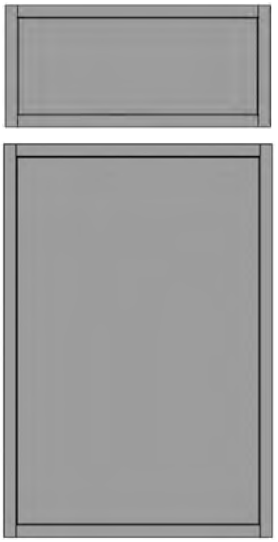

Intrigue Terrace

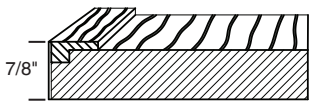

Door Min: 6-3/8" x 4-1/2" (vertical grain)
Drawer Min: 6-3/8" x 4-1/2" (vertical grain)
Door Max: 48" x 95-1/2" (vertical grain)
Drawer Max: 48" x 95-1/2" (vertical grain)
3/4" wide moulding on face
3/4" thick TTS panel
Vertical grain standard on door and drawer front.

Intrigue TTS Terrace Material Charge (1.5 sq. ft. min.)	
	Terrace
Carbon Frozen Wood (H1292)	
Grey Vicenza Oak (H3158)	
Natural Carini Walnut (H3710)	

All Intrigue TTS products utilize TSCA/CARB2 compliant composite core materials.

Offering And Availability

All Conestoga products are available in a wide variety of specifications to satisfy your custom needs. The information below indicates any exceptions or limitations pertaining to the designs on the previous page. For a detailed listing of a particular product specification, refer to the page indicated.

Intrigue TTS Color Selections	
	See Color Availability and Pricing Chart on previous page.
Edge Profiles	
	Design specific – 0.8 mm ABS edgeband has slightly eased edges. Matching color edgeband.
Options	
	Concealed hinge boring, SOSS hinge boring and Sample ID Label. Vertical grain direction standard on Terrace door and drawer front. Horizontal grain direction optional. Multi-panel doors not available.
Mullions/Frame Only	
	Mullions and frame only doors not available.
Accessories	
pgs 5.57-5.62	Veneers, Edgeband Rolls, Mouldings, Cut-to-Size Panels (1/4" & 19mm), Full Sheets (1/4" & 19mm), Touch Up Kits.

Thermally Textured Surface Doors & Drawer Fronts

Conestoga's edgebanded Strata TTS program incorporates European styling and laminate technology to produce contemporary doors and accessory products featuring realistic wood patterns and varying degrees of grain textures. Strata products are extremely durable, colorfast and available in a variety of colors and patterns.

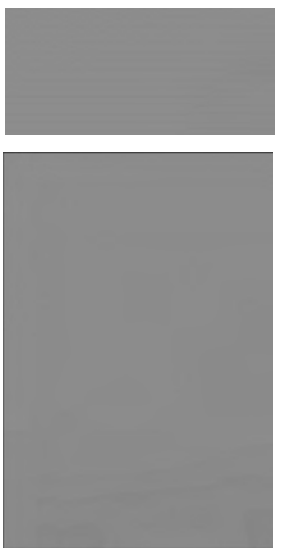

Strata Slab

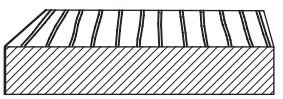

Min: 2-3/4" x 6-3/8" (vertical grain)

Max: 48" x 96" (vertical grain)

Min: 6-3/8" x 2-3/4" (horizontal grain)

Max: 96" x 48" (horizontal grain)

Vertical grain standard on door and drawer front.

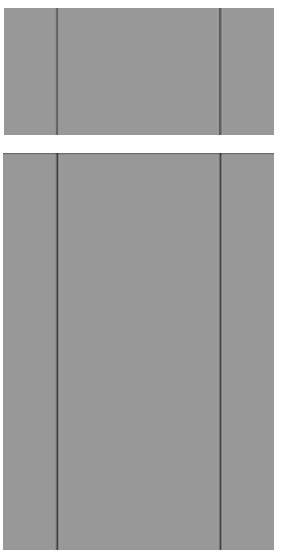

Strata 3-Piece

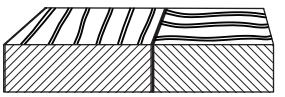

Min: 8-3/4" x 5-3/4" (horizontal grain panel)

Max: 96" x 48" (horizontal grain panel)

3" framing

Horizontal grain standard on panel only.

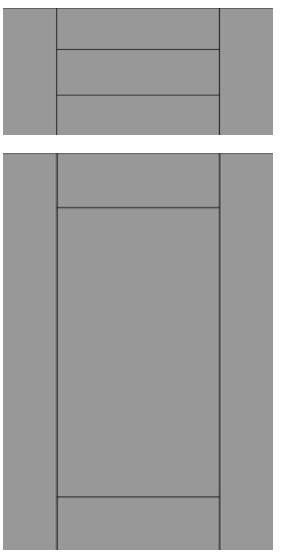

Strata 5-Piece

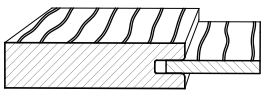

Door Min: 8-3/4" x 7" (vertical grain standard)

Drawer Min: 8-3/4" x 5-3/4" (horizontal grain standard)

Door Max: 48" x 96" (vertical grain)

Door Min: 8-3/4" x 7" (horizontal grain-optional)

Drawer Min: 8-3/4" x 5-3/4" (vertical grain-optional)

Drawer Max: 96" x 48" (horizontal grain)

Door: 3" framing

Drawer: 2-1/4" rails
3" stiles

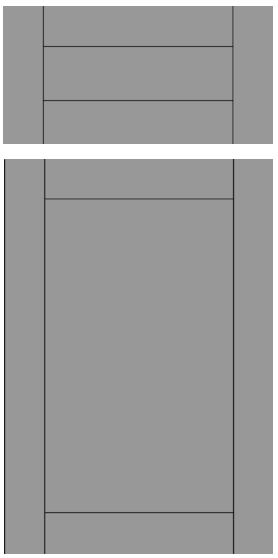

Strata Slim 5-Piece

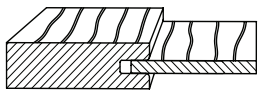

Door Min: 7-1/4" x 7" (vertical grain standard)

Drawer Min: 7-1/4" x 5-3/4" (horizontal grain standard)

Door Max: 45" x 96" (vertical)

Door Min: 7-1/4" x 7" (horizontal grain, optional)

Drawer Min: 7-1/4" x 5-3/4" (vertical grain, optional)

Drawer Max: 96" x 45" (horizontal)

2-1/4" framing

Strata Material Charges (1.5 sq. ft. min.)				
	Slab	**3-Piece**	**5-Piece**	**Slim 5-Piece**
Tier ❶				
Tier ❸				

Some Strata colors have different levels of texture on the face than on the back. All Strata Slab, 3-Piece, 5-Piece and Slim 5-Piece designs will have a blue dot label to identify which surface is the face.

All Strata TTS products utilize TSCA/CARB2 compliant composite core materials.

Offering And Availability

All Conestoga products are available in a wide variety of specifications to satisfy your custom needs. The information below indicates any exceptions or limitations pertaining to the designs on the previous page. For a detailed listing of a particular product specification, refer to the page indicated.

Edge Profiles	
	Design specific – 1mm ABS edgeband has eased edges. Matching color edgeband standard, contrasting ABS stainless edgeband is optional, see Options for pricing.
Options	
pgs 5.56, 7.11-7.15	All designs – concealed hinge boring, Soss hinge boring and sample ID label. Vertical grain direction standard on Slab door and drawer front. Horizontal grain panel standard on 3-Piece door and drawer front; vertical grain panel not available. Vertical grain pattern standard on Slim 5-Piece and 5-Piece doors; horizontal grain panel option available. Horizontal grain pattern standard on Slim 5-Piece and 5-Piece drawer front; vertical grain pattern available. Sequential grain matching available on Slab design only; Sequential Grain Match Order Form located in Order Forms section of manual. Contrasting ABS stainless finish 1mm edgeband is available with all colors. Multi-panel doors available in Slim 5-Piece and 5-Piece designs only. Multi-panel maximum size is 48" x 96". Midrail minimum width is 3" regardless of design selected.
Mullions/Frame Only	
	Mullions not available. Frame only doors available in all colors eligible for Slim 5-Piece and 5-Piece designs. A medium grey retainer moulding is automatically included (upcharge applies). The retainer moulding covers the raw substrate, eliminating the need to paint or mask visible substrate. **Note:** Frame only door pricing is calculated using (list) Design Charge, plus the actual square footage of the door multiplied by the material square foot charge. In addition the following upcharge must be added: 1.0 to 4.0 sq. ft. 4.01 to 7.0 sq. ft. 7.01 sq. ft. or larger 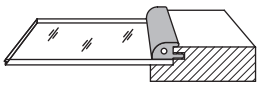 Retainer Moulding
Accessories	
pgs 5.57-5.62	Veneers, Edgeband Rolls, Mouldings, Cut-to-Size Panels (8mm & 19mm), Full Sheets (8mm & 19mm), 38mm Slabs, Lightweight 38mm Slabs, Touch Up Kits.

Strata Colors/Textures/Material Charge Tier				
Color	BO11 - Bianco ❶	LG18 - Graphite ❶	LK55 - Palissandro ❶	LK84 - Oregon Pine ❶
Texture	Matrix/Matrix	Matrix/Matrix	Matrix/Matrix	Matrix/Matrix
Color	LM08 - Carbone ❶	LM67 - Aspen Oak ❶	LM69 - City Oak ❶	LM96 - Swiss Almond ❶
Texture	Matrix/Matrix	Matrix/Matrix	Matrix/Matrix	Matrix/Matrix
Color	LN27 - Barn Oak ❶	LN30 - Vineyard Oak ❶	SO11 - Silver Sand ❸	SO12 - Burned ❸
Texture	Matrix/Matrix	Matrix/Matrix	Yosemite/Yosemite	Yosemite/Yosemite
Color	SO13 - Cypress Point ❸	SO15 - Light Carbon ❸	U129 Nero ❸	
Texture	Yosemite/Yosemite	Yosemite/Yosemite	Yosemite/Yosemite	

❶, ❸ Indicates Material Charge Tier.

Thermally Textured Surface Doors & Drawer Fronts

Conestoga's edgebanded Strata TTS program incorporates European styling and laminate technology to produce contemporary doors and accessory products featuring realistic wood patterns and varying degrees of grain textures. Strata products are extremely durable, colorfast and available in a variety of colors and patterns.

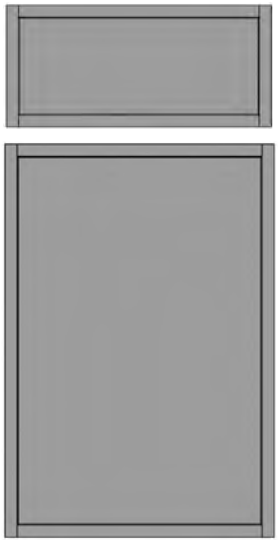

Strata Terrace

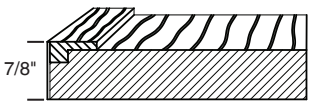

Door Min: 6-3/8" x 4-1/2" (vertical grain)
Drawer Min: 6-3/8" x 4-1/2" (vertical grain)
Door Max: 48 x 95-1/2" (vertical grain)
Drawer Max: 48" x 95-1/2" (vertical grain)
3/4" wide moulding on face
3/4" thick TTS panel
Vertical grain standard on door and drawer front.

Strata TTS Terrace Material Charge (1.5 sq. ft. min.)	
	Terrace
BO11 - Bianco (Tier 1)	
LG18 - Graphite (Tier 1)	
LK84 - Oregon Pine (Tier 1)	
LM08 - Carbone (Tier 1)	
LM67 - Aspen Oak (Tier 1)	
LM69 - City Oak (Tier 1)	
LN30 - Vineyard Oak (Tier 1)	
SO15 - Light Carbon (Tier 3)	

All Strata TTS products utilize TSCA/CARB2 compliant composite core materials.

Offering And Availability

All Conestoga products are available in a wide variety of specifications to satisfy your custom needs. The information below indicates any exceptions or limitations pertaining to the designs on the previous page. For a detailed listing of a particular product specification, refer to the page indicated.

Strata TTS Color Selections	
	See Color Availability and Pricing Chart on previous page.
Edge Profiles	
	Design specific – 1mm ABS edgeband has slightly eased edges. Matching color edgeband.
Options	
	Concealed hinge boring, SOSS hinge boring and Sample ID Label. Vertical grain direction standard on Terrace door and drawer front. Horizontal grain direction optional. Multi-panel doors not available.
Mullions/Frame Only	
	Mullions and frame only doors not available.
Accessories	
pgs 5.57-5.62	Veneers, Edgeband Rolls, Mouldings, Cut-to-Size Panels (8mm & 19mm), Full Sheets (8mm & 19mm), 38mm Slabs, Lightweight Slabs and Touch Up Kits.

Thermally Textured Surface Doors & Drawer Fronts

The Vogue TTS line of products offers the same realistic wood look and a high level of durability as Strata, but with a less aggressive surface texture. In addition, Vogue panel surfaces contain an antibacterial surface agent, perfect for kitchens, schools, medical offices and retail environments.

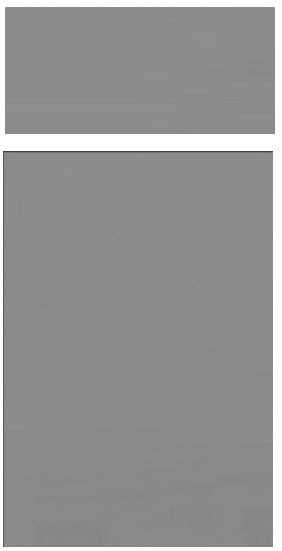

Vogue Slab

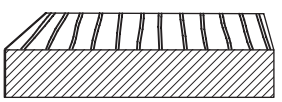

Min: 2-3/4" x 6-3/8" (vertical grain)

Max: 48" x 96" (vertical grain)

Min: 6-3/8" x 2-3/4" (horizontal grain)

Max: 96" x 48" (horizontal grain)

Vertical grain standard on door and drawer front.

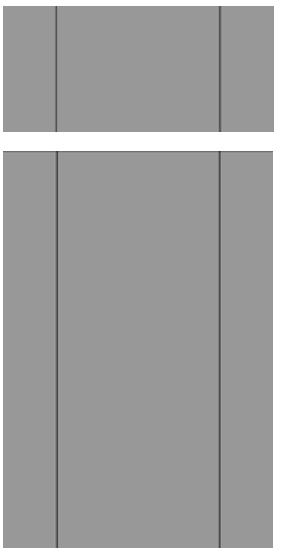

Vogue 3-Piece

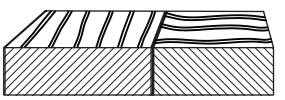

Min: 8-3/4" x 5-3/4" (horizontal grain panel)

Max: 96" x 48" (horizontal grain panel)

3" framing

Horizontal grain standard on panel only, no option.

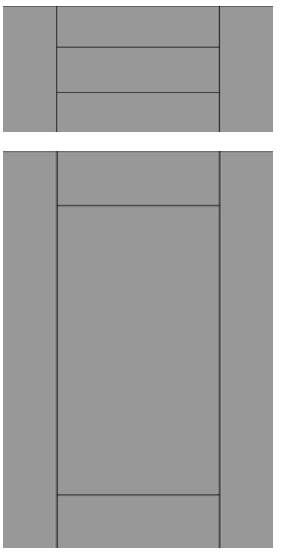

Vogue 5-Piece

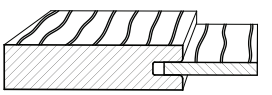

Door Min: 8-3/4" x 7" (vertical grain standard)

Drawer Min: 8-3/4" x 5-3/4" (horizontal grain standard)

Door Max: 48" x 96" (vertical)

Door Min: 8-3/4" x 7" (horizontal grain, optional)

Drawer Min: 8-3/4" x 5-3/4" (vertical grain, optional)

Drawer Max: 96" x 48" (horizontal)

Door: 3" framing

Drawer: 2-1/4" rails
3" stiles

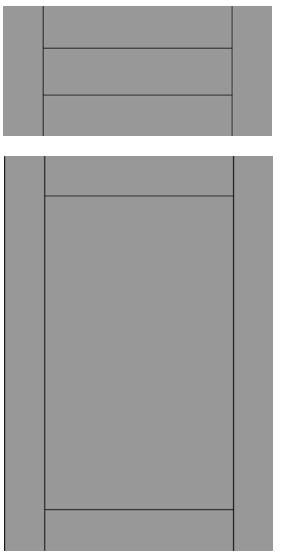

Vogue Slim 5-Piece

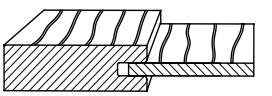

Door Min: 7-1/4" x 7" (vertical grain standard)

Drawer Min: 7-1/4" x 5-3/4" (horizontal grain standard)

Door Max: 45" x 96" (vertical)

Door Min: 7-1/4" x 7" (horizontal grain, optional)

Drawer Min: 7-1/4" x 5-3/4" (vertical grain, optional)

Drawer Max: 96" x 45" (horizontal)

2-1/4" framing

Vogue TTS Material Charges (1.5 sq. ft. min.)

	Slab	3-Piece	5-Piece	Slim 5-Piece
Fresno Glacial (16N)				
Nogal Slow (5AE)				
Roble Aurora (98V)				
Roble Azabache (75V)				
Roble Colorado (97V)				
Roble Denver (84V)				
Roble Eternity (4AE)				
Roble Joplin (17N)				
Roble Stella (74V)				

All Vogue TTS products use TSCA/CARB2 compliant composite core materials.

Offering And Availability

All Conestoga products are available in a wide variety of specifications to satisfy your custom needs. The information below indicates any exceptions or limitations pertaining to the designs on the previous page. For a detailed listing of a particular product specification, refer to the page indicated.

TTS Color Selections	
	See Color Availability and Pricing Chart on previous page.
Edge Profiles	
	Design specific – 1mm PVC edgeband has slightly eased edges. Matching color edgeband.
Options	
pgs 5.56, 7.11-7.15	All designs – concealed hinge boring, Soss hinge boring and Sample ID label. Vertical grain direction standard on Slab door and drawer front. Horizontal grain panel standard on 3-Piece door and drawer front; vertical grain panel not available. Slim 5-Piece and 5-Piece doors: vertical grain panel standard; horizontal grain panel option available. Horizontal grain panel standard on a Slim 5-Piece and 5-Piece drawer front; vertical grain panel option available. Sequential grain matching available on Slab design only; see following page for program details and pricing. Sequential Grain Match Order Form located in Order Forms Section of manual. Multi-panel doors available in Slim 5-Piece and 5-Piece designs only. Multi-panel maximum size is 48" x 96". Midrail minimum width is 3" regardless of design selected.
Mullions/Frame Only	
	Mullions not available. Frame only doors available in all Vogue colors eligible for Slim 5-Piece and 5-Piece designs. A medium grey retainer moulding is automatically included (upcharge applies). The retainer moulding covers the raw substrate, eliminating the need to paint or mask visible substrate. **Note:** Frame only door pricing is calculated using a (list) Design Charge, plus the actual square footage of the door multiplied by the material square foot charge. In addition the following upcharge must be added: 1.0 to 4.0 sq. ft. 4.01 to 7.0 sq. ft. 7.01 sq. ft. or larger 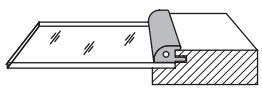 Retainer Moulding
Accessories	
pgs 5.57-5.62	Veneers, Edgeband Rolls, Mouldings, Cut-to-Size Panels (8mm & 19mm), Full Sheets (8mm & 19mm), 38mm Slabs, Lightweight 38mm Slabs, Touch Up Kits.

Thermally Textured Surface Doors & Drawer Fronts

The Vogue TTS line of products offers the same realistic wood look and a high level of durability as Strata, but with a less aggressive surface texture. In addition, Vogue panel surfaces contain an antibacterial surface agent, perfect for kitchens, schools, medical offices and retail environments.

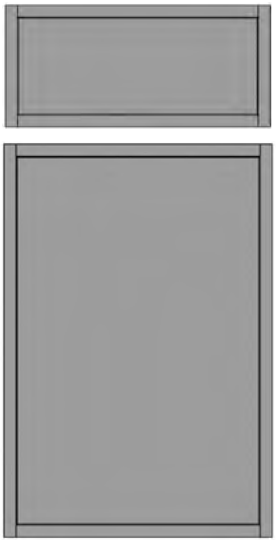

Vogue Terrace

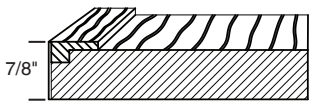

Door Min: 4-1/2" x 6-3/8" (vertical grain)
Drawer Min: 6-3/8" x 4-1/2" (vertical grain)
Door Max: 48" x 95-1/2" (vertical grain)
Drawer Max: 48" x 95-1/2" (vertical grain)
3/4" wide moulding on face
3/4" thick TTS panel
Vertical grain standard on door and drawer front.

Vogue TTS Material Charges (1.5 sq. ft. min.)

	Terrace
Essenza Oak (631B)	
Fresno Glacial (16N)	
Nogal Slow (5AE)	
Roble Aurora (98V)	
Roble Azabache (75V)	
Roble Denver (84V)	
Roble Eternity (4AE)	
Roble Stella (74V)	
Roble Trigo (42B)	
Sostanza Oak (632B)	

All Vogue TTS products utilize TSCA/CARB2 compliant composite core materials.

Offering And Availability

All Conestoga products are available in a wide variety of specifications to satisfy your custom needs. The information below indicates any exceptions or limitations pertaining to the designs on the previous page. For a detailed listing of a particular product specification, refer to the page indicated.

Strata TTS Color Selections	
	See Color Availability and Pricing Chart on previous page.
Edge Profiles	
	Design specific – 1mm PVC edgeband has slightly eased edges. Matching color edgeband.
Options	
	Concealed hinge boring, SOSS hinge boring and Sample ID Label. Vertical grain direction standard on Terrace door and drawer front. Horizontal grain direction optional. Multi-panel doors not available.
Mullions/Frame Only	
	Mullions and frame only doors not available.
Accessories	
pgs 5.57-5.62	Veneers, Edgeband Rolls, Mouldings, Cut-to-Size Panels (8mm & 19mm), Full Sheets (8mm & 19mm), 38mm Slabs, Lightweight 38mm Slabs and Touch Up Kits.

Sequential Grain Matching

- Sequential Grain Matching is available on all Strata, Vogue and most Intrigue Thermally Textured Surfaces (TTS) edgebanded Slab doors and drawer fronts. Not available in Intrigue TTS U7779 Fog Grey or W1050 Coastal White.
- Vertical or horizontal grain orientation is available on Slab doors and drawer fronts and must be specified.
- Grain matching will flow through all of the associated doors and/or drawer fronts on individual cabinets. A maximum of 6 pieces is permitted within a single sequenced grouping.
- Grain will not match from cabinet to cabinet.
- Due to the total cutter diameter required to cut panel blanks, spacing is approximately 1/8" between sequentially matched components unless otherwise noted on specific templates.
- Each door and drawer front will be identified to designate its sequence within a cabinet. Doors and drawer fronts will be labeled on the face in the lower right corner with a numeric/alpha code combination to represent your item number and all of the related pieces to that specific item. (Example: 1A, 1B, etc.)
- Doors and drawer fronts requiring sequential matching are priced using the Material Charges listed in the chart below.
- Maximum cabinet sizes cannot exceed 46" across the grain or 94" with the grain.
- Additional information regarding the Sequential Grain Matching program, including configuration templates, is available on the Customer Business Portal or in a PDF file. Contact your Sales Representative or Customer Service.
- In the event that a replacement is needed, the entire template (series of doors and drawer fronts) will need to be reordered to ensure a consistent grain match.

TTS Sequential Grain Match Pricing		
	Design Charge (per Door/Drawer Front)	**Material Charge** (1 sq. ft. min.)
Intrigue Slab		
Strata Slab - Tier 1		
Strata Slab - Tier 3		
Vogue Slab		

Ordering Instructions

- To achieve Sequential Grain Matching, all corresponding doors and drawer fronts will be cut from an oversized blank.
- Doors and drawer fronts requiring Sequential Grain Matching must be ordered using Conestoga's Sequential Grain Matching (SGM) Templates and Order Form #2 to identify the specific cabinet configuration, position and sequence of the individual pieces within a cabinet. Templates for cabinet configurations range from 2 pieces to 6 pieces.
- Select the appropriate SGM template number that matches your cabinet configuration. Indicate the grain direction of your doors and drawer fronts (vertical or horizontal).
- Following the alpha sequence of the template, enter your doors and drawer fronts in positions A, B, C etc., width x height.
- Indicate whether each piece is being used as a door or a drawer front.
- Specify concealed hinge boring and grain direction, as well as any special instructions in the notes section.

Thermally Textured Surface Accessories

Complementary accessories to fabricate casework and ancillary items are available in matching TTS color components. Textures do not match panel stock.

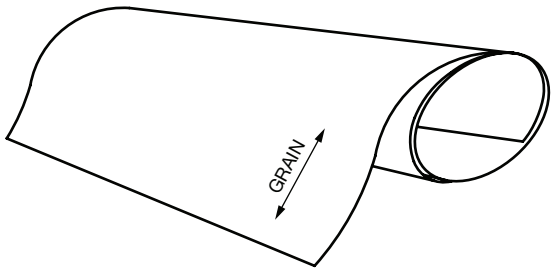

TTS Veneers (Intrigue, Strata and Vogue)

- Available in all TTS colors.
  Note: Textures on veneers range from linear to registered and embossed and are more subtle compared to panel texture.
- TTS veneers are .8mm thick with a phenolic backer.
- One end and one side are guaranteed to be free from physical damage.
- Per manufacturer's recommendations, veneers should be unrolled, placed flat and allowed to acclimate 48 hours prior to application.
- Available with PSA backer option - upcharge and additional lead-time applies.
- 3-day lead-time.

TTS Veneers		
Intrigue	**Sheet Thickness**	**Sheet Size**
Carbon Frozen Wood (H1292), Grey Vicenza Oak (H3158), Natural Carini Walnut (H3710), Stone Grey Frozen Wood (H1288), White Frozen Wood (H1290)	.8mm	49" x 97"
Strata		
Aspen Oak (LM67), Barn Oak (LN27), Bianco (BO11), Burned (SO12), Carbone (LM08), City Oak (LM69), Cypress Point (SO13), Graphite (LG18), Light Carbon (SO15), Nero (U129), Oregon Pine (LK84), Palissandro (LK55), Silver Sand (SO11), Swiss Almond (LM96), Vineyard Oak (LN30)	.8mm	51" x 120"
Vogue		
Fresno Glacial (16N), Nogal Slow (5AE), Roble Aurora (98V), Roble Azabache (75V), Roble Colorado (97V), Roble Denver (84V), Roble Eternity (4AE), Roble Joplin (17N), Roble Stella (74V)	.8mm	51" x 120"

Please refer to pricing through Con-Nex, our online ordering program

Thermally Textured Surface Accessories (continued)

PSA Backer Option (Intrigue, Strata and Vogue)

TTS veneers can be ordered with a PSA (Pressure Sensitive Adhesive) Backer Option. Veneers will be shipped with the PSA adhesive layer protected by a peel coat covering that must be removed prior to application.

- PSA layer is a .1mm thick 3M clear pressure transfer adhesive membrane.
- PSA layer will be applied within 1/4" from one long edge the entire length of the veneer sheet.
- Adhesive width on veneer back is 48", regardless of veneer width.
- One end and one side are guaranteed to be free from physical damage.
- Proper surface conditions and preparation is essential to successful application and performance of veneered surfaces.
- Per manufacturer's recommendations, veneers should be unrolled, placed flat and allowed to acclimate 48 hours prior to application.
- PSA veneers should not be applied to bare solid wood or surfaces covered with sanding sealers, high pressure laminates, melamine or other plastic materials.
- Conestoga is not liable for product failure due to improper surface preparation or installation technique.
- Add 4 days to TTS veneer lead-time.

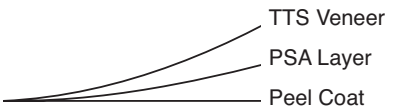

TTS PSA Backer			
Veneer	**Sheet Size**	**Thickness w/PSA**	**PSA Upcharge**
Intrigue TTS	49" x 97"	.9mm	
Strata TTS	51" x 120"	.9mm	
Vogue TTS	51" x 120"	.9mm	

*Add PSA application charge to the veneer sheet cost.

TTS Narrow Overlay Filler (Intrigue, Strata and Vogue)

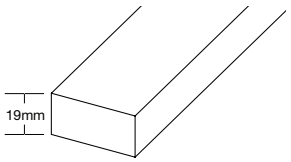

- Narrow Overlay Filler (19mm thick) can be applied to installation fillers for full overlay trim applications.
- Filler width can be customized in 1/16" increments from 1-1/2" to 2-11/16" in width and lengths from 12" to 96".
- All edges are banded with matching edgeband – no option.
- Sold in pairs – no option.

TTS Narrow Overlay Filler (1.5 sq. ft. min.)		
Intrigue	**Design Charge (per pair)**	**Material Charge**
Carbon Frozen Wood (H1292), Coastal White (W1050), Fog Grey (U779), Grey Vicenza Oak (H3158), Natural Carini Walnut (H3710), Stone Grey Frozen Wood (H1288), White Frozen Wood (H1290)		
Strata		
Aspen Oak (LM67), Barn Oak (LN27), Bianco (BO11), Carbone (LM08), City Oak (LM69), Graphite (LG18), Oregon Pine (LK84), Palissandro (LK55), Swiss Almond (LM96), Vineyard Oak (LN30)		
Burned (SO12), Cypress Point (SO13), Light Carbon (SO15), Nero (U129), Silver Sand (SO11)		
Vogue		
Fresno Glacial (16N), Nogal Slow (5AE), Roble Aurora (98V), Roble Azabache (75V), Roble Colorado (97V), Roble Denver (84V), Roble Eternity (4AE), Roble Joplin (17N), Roble Stella (74V)		

Thermally Textured Surface Accessories (continued)

TTS L-Moulding (Intrigue, Strata and Vogue)

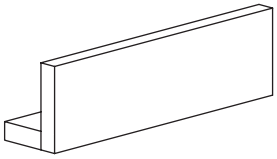

- Accent moulding can be used as fascia or under cabinets as a light rail.
- Face width can be customized in 1/16" increments from 2-3/4" to 8". Mounting plate is 2-3/4" wide - not customizable.
- Moulding Cut-Down Option available.
- Matching color edgeband is standard. All edges are banded including ends.
- Sold in 96" length.

TTS L-Moulding		
Intrigue	**Face Width**	**Price**
Carbon Frozen Wood (H1292), Grey Vicenza Oak (H3158), Natural Carini Walnut (H3710), Stone Grey Frozen Wood (H1288), White Frozen Wood (H1290)	2-3/4" to 4"	
	4-1/16" to 8"	
Strata		
Aspen Oak (LM67), Barn Oak (LN27), Bianco (BO11), Carbone (LM08), City Oak (LM69), Graphite (LG18), Oregon Pine (LK84), Palissandro (LK55), Swiss Almond (LM96), Vineyard Oak (LN30)	2-3/4" to 4"	
Burned (SO12), Cypress Point (SO13), Light Carbon (SO15), Nero (U129), Silver Sand (SO11)		
Aspen Oak (LM67), Barn Oak (LN27), Bianco (BO11), Carbone (LM08), City Oak (LM69), Graphite (LG18), Oregon Pine (LK84), Palissandro (LK55), Swiss Almond (LM96), Vineyard Oak (LN30)	4-1/16" to 8"	
Burned (SO12), Cypress Point (SO13), Light Carbon (SO15), Nero (U129), Silver Sand (SO11)		
Vogue		
Fresno Glacial (16N), Nogal Slow (5AE), Roble Aurora (98V), Roble Azabache (75V), Roble Colorado (97V), Roble Denver (84V), Roble Eternity (4AE), Roble Joplin (17N), Roble Stella (74V)	2-3/4" to 4"	
Fresno Glacial (16N), Nogal Slow (5AE), Roble Aurora (98V), Roble Azabache (75V), Roble Colorado (97V), Roble Denver (84V), Roble Eternity (4AE), Roble Joplin (17N), Roble Stella (74V)	4-1/16" to 8"	

TTS Scribe Moulding (Intrigue, Strata and Vogue)

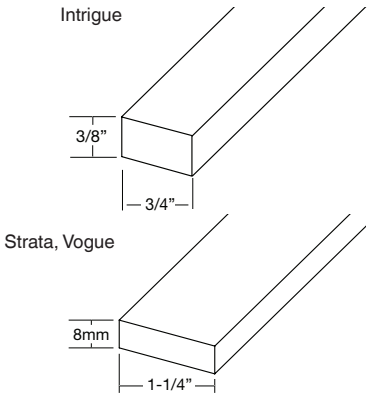

- Intrigue Scribe Moulding is 3/8" thick x 3/4" wide x 96" long.
- Intrigue Scribe is manufactured utilizing 19mm edgebanded panels edgebanded on the face and both short edges of the moulding, while the two 3/8" thick long edges are the matching TFL board surface. The back of the moulding is uncoated for installation.
- Intrigue Scribe Mouldings are shipped with an additional support piece to provide reinforced stability throughout the delivery process.
- Strata & Vogue Scribe Moulding is 8mm thick x 1-1/4" wide x 96" long.
- Strata & Vogue Scribe is manufactured utilizing edgebanded 8mm material, banded on one long edge and both short edges with matching edgeband.
- Moulding Cut-Down Option is available, but will remove one short edgebanded end.
- Sold in pairs – no option.

TTS Scribe Moulding	
Intrigue	**Price per piece**
Carbon Frozen Wood (H1292), Coastal White (W1050), Fog Grey (U779), Grey Vicenza Oak (H3158), Natural Carini Walnut (H3710), Stone Grey Frozen Wood (H1288), White Frozen Wood (H1290)	
Coastal White (W1050), Fog Grey (U779)	
Strata	
Aspen Oak (LM67), Barn Oak (LN27), Bianco (BO11), Carbone (LM08), City Oak (LM69), Graphite (LG18), Oregon Pine (LK84), Palissandro (LK55), Swiss Almond (LM96), Vineyard Oak (LN30)	
Burned (SO12), Cypress Point (SO13), Light Carbon (SO15), Nero (U129), Silver Sand (SO11)	
Vogue	
Fresno Glacial (16N), Nogal Slow (5AE), Roble Aurora (98V), Roble Azabache (75V), Roble Colorado (97V), Roble Denver (84V), Roble Eternity (4AE), Roble Joplin (17N), Roble Stella (74V)	

Thermally Textured Surface Accessories (continued)

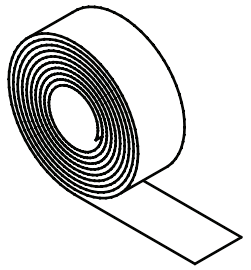

Edgeband Rolls (Intrigue, Strata and Vogue)

- Available in all Intrigue, Strata and Vogue colors.
- Available in full rolls or in 125' increments.
- Edgeband can be applied with PUR or EVA adhesives.
- Full rolls of edgeband vary in length. See chart below for details.
- Edgeband width varies. See chart below for details.

TTS Edgeband Rolls

Intrigue	Material Makeup	Width	Thickness	Length	Price
Carbon Frozen Wood (H1292), Grey Vicenza Oak (H3158), Natural Carini Walnut (H3710), Stone Grey Frozen Wood (H1288), White Frozen Wood (H1290)	ABS	23mm	.8mm	125'	
				246'	
Coastal White (W1050),Fog Grey (U779)	PVC			125'	
				600'	
Strata					
Aspen Oak (LM67), Barn Oak (LN27), Bianco (BO11), Burned (SO12), Carbone (LM08), City Oak (LM69), Cypress Point (SO13), Graphite (LG18), Light Carbon (SO15), Nero (U129), Oregon Pine (LK84), Palissandro (LK55), Silver Sand (SO11), Stainless Steel Finish, Swiss Almond (LM96), Vineyard Oak (LN30)	ABS	23mm	1mm	125'	
				328'	
Vogue					
Fresno Glacial (16N), Nogal Slow (5AE), Roble Aurora (98V), Roble Azabache (75V), Roble Colorado (97V), Roble Denver (84V), Roble Eternity (4AE), Roble Joplin (17N), Roble Stella (74V)	PVC	22mm	1mm	125'	
				575'	

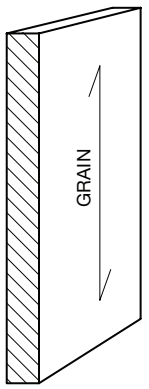

Cut-To-Size TTS Textured Panels (Intrigue, Strata and Vogue)

- Cut-to-size pricing:
  - Design Charge.
  - 8mm/1/4" and 19mm thicknesses – 1 sq. ft. min. applies.
  - Non-edgebanded panel: Min. – 2-1/2" x 2-1/2".
    Max. – 48" x 96" (vertical grain).
- Edgeband Options:
  - Matching edgeband applied to 1 to 4 edges, Design Charge per panel, regardless of number of edges receiving edgeband.
  - 19mm thickness only.
  - Edgebanded panel: Min. – 2-3/4" x 6-3/8", Max. – 48" x 96" (vertical grain).
    Min. – 6-3/8" x 2-3/4", Max. – 96" x 48" (horizontal grain).
  - Core materials consist of TSCA/CARB2 compliant particle board.

TTS Cut-To-Size Panels (1 sq. ft. min.)

	Non-Edgebanded		Edgebanded	
Intrigue	**1/4" Thick**	**19mm Thick**	**1/4" Thick**	**19mm Thick**
Carbon Frozen Wood (H1292), Grey Vicenza Oak (H3158), Natural Carini Walnut (H3710), Stone Grey Frozen Wood (H1288), White Frozen Wood (H1290)				
Coastal White (W1050), Fog Grey (U779)				
Strata	8mm	19mm	8mm	19mm
Aspen Oak (LM67), Barn Oak (LN37), Bianco (BO11), Carbone (LM08), City Oak (LM69), Graphite (LG18), Oregon Pine (LK84), Palissandro (LK55), Swiss Almond (LM96), Vineyard Oak (LN30)				
Burned (SO12), Cypress Point (SO13), Light Carbon (SO15), Nero (U129), Silver Sand (SO11)				
Vogue	8mm	19mm	8mm	19mm
Fresno Glacial (16N), Nogal Slow (5AE), Roble Aurora (98V), Roble Azabache (75V), Roble Colorado (97V), Roble Denver (84V), Roble Eternity (4AE), Roble Joplin (17N), Roble Stella (74V)				

Thermally Textured Surface Accessories (continued)

TTS Textured Full Sheets 8mm & 19mm for Strata and Vogue, 1/4" and 19mm for Intrigue

- Full sheet dimensions vary by thickness. See chart below for details.
- TTS board surfaces are textured both on face and back.
- **Note:** There are multiple texture combinations within the TTS offerings. In some cases, these textures differ from face to back. When boring for hinges or drilling for decorative hardware, make sure to use the correct surface for the face of all doors, drawer fronts, filler strips, etc.
- Core material consists of TSCA/CARB2 compliant particle board.
- Full sheets will not be edgebanded. If an edgebanded full sheet is desired, order as TTS Slab.

TTS Full Sheets			
Intrigue	**Sheet Thickness**	**Sheet Size**	**Price per sheet**
Carbon Frozen Wood (H1292), Grey Vicenza Oak (H3158), Natural Carini Walnut (H3710), Stone Grey Frozen Wood (H1288), White Frozen Wood (H1290)	1/4"	49" x 97"	
Coastal White (W1050), Fog Grey (U779)			
Carbon Frozen Wood (H1292), Grey Vicenza Oak (H3158), Natural Carini Walnut (H3710), Stone Grey Frozen Wood (H1288), White Frozen Wood (H1290)	19mm	49" x 97"	
Coastal White (W1050), Fog Grey (U779)			
Strata			
Aspen Oak (LM67), Barn Oak (LN37), Bianco (BO11), Carbone (LM08), City Oak (LM69), Graphite (LG18), Oregon Pine (LK84), Palissandro (LK55), Swiss Almond (LM96), Vineyard Oak (LN30)	8mm	49" x 97"	
Burned (SO12), Cypress Point (SO13), Light Carbon (SO15), Nero (U129), Silver Sand (SO11)			
Aspen Oak (LM67), Barn Oak (LN37), Bianco (BO11), Carbone (LM08), City Oak (LM69), Graphite (LG18), Oregon Pine (LK84), Palissandro (LK55), Swiss Almond (LM96), Vineyard Oak (LN30)	19mm	49" x 97"	
Burned (SO12), Cypress Point (SO13), Light Carbon (SO15), Nero (U129), Silver Sand (SO11)			
Vogue			
Fresno Glacial (16N), Nogal Slow (5AE), Roble Aurora (98V), Roble Azabache (75V), Roble Colorado (97V), Roble Denver (84V), Roble Eternity (4AE), Roble Joplin (17N), Roble Stella (74V)	8mm	48-1/2" x 97"	
Fresno Glacial (16N), Nogal Slow (5AE), Roble Aurora (98V), Roble Azabache (75V), Roble Colorado (97V), Roble Denver (84V), Roble Eternity (4AE), Roble Joplin (17N), Roble Stella (74V)	19mm	48-1/2" x 97"	

TTS 38mm Slabs (Strata, Vogue)

- Available in Strata and Vogue colors only. 38mm Slabs not available in Intrigue colors.
- Edgebanded on all 4 edges.
- Construction method utilizes two 19mm TTS panels sandwiched together.
- Ideal for use as built-in end panels and columns.
- Vertical grain standard. Horizontal grain option.
- Minimum size – 9" x 9".
  Maximum size – Width maximum is 34-1/2" with vertical grain or 96" with horizontal grain. Length maximum is 96" with vertical grain or 34-1/2" with horizontal grain, but due to overall weight of this product, maximum square footage may not exceed 16 square feet per panel.
- Follow standard pricing methodology – (total sq. footage x Material Charge) + Design Charge.

TTS 38mm Slabs (2 sq. ft. min.)		
Strata	**Design Charge**	**Material Charge**
Aspen Oak (LM67), Barn Oak (LN27), Bianco (BO11), Carbone (LM08), City Oak (LM69), Graphite (LG18), Oregon Pine (LK84), Palissandro (LK55), Swiss Almond (LM96), Vineyard Oak (LN30)		
Burned (SO12), Cypress Point (SO13), Light Carbon (SO15), Nero (U129), Silver Sand (SO11)		
Vogue		
Fresno Glacial (16N), Roble Aurora (98V), Roble Azabache (75V), Roble Colorado (97V)		

Thermally Textured Surface Accessories (continued)

Lightweight TTS 38mm Slabs

- Available in most Strata and Vogue colors. Not available in Intrigue colors.
- Edgebanded on all 4 edges.
- Construction utilizes 7/8" thick, 2" wide wood internal support frame with 7/8" thick polystyrene core material sandwiched between two 8mm TTS panels.
  - Construction method allows Lightweight 38mm Slabs to be ordered up to a maximum of 23 sq. ft. per panel.
- Vertical grain standard. Horizontal grain option.
- Minimum size – 9" x 9". A 2 square foot minimum charge applies, regardless of actual size. Maximum size – Vertical grain 34-1/2" x 96", Horizontal grain 96" x 34-1/2".
  - Any panel over 48" in width or height will receive a 2" wide center stile within the internal support frame.
- Follow standard pricing methodology – (total sq. footage x Material Charge) + Design Charge.

Lightweight TTS 38mm Slabs (2 sq. ft. min.)			
Strata	**Sq. Ft. Per Panel**	**Design Charge**	**Material Charge**
Aspen Oak (LM67), Barn Oak (LN27), Bianco (BO11), Carbone (LM08), City Oak (LM69), Graphite (LG18), Oregon Pine (LK84), Palissandro (LK55), Swiss Almond (LM96), Vineyard Oak (LN30)	<10 sq. ft.		
	>10 sq. ft.		
Burned (SO12), Cypress Point (SO13), Light Carbon (SO15), Nero (U129), Silver Sand (SO11)	<10 sq. ft.		
	>10 sq. ft.		
Vogue			
Fresno Glacial (16N), Roble Aurora (98V), Roble Azabache (75V), Roble Colorado (97V)	<10 sq. ft.		
	>10 sq. ft.		

Touch Up Kits for TTS Surfaces

Intrigue, Strata and Vogue TTS materials are resistant to surface scratches, dents and normal wear. For care of minor surface abrasions, a Touch Up Kit has been carefully matched for each TTS color.

- Kit includes a color marker and fil-stick.
- Order kit by ID# and color from chart below.
- Many TTS products contain several colors within the overall product appearance. Depending on the location of the area being retouched, it may be necessary to blend the touch up material to achieve the desired appearance.

TTS Touch Up Kits							
ID#	**Color**	**ID#**	**Color**	**ID#**	**Color**	**ID#**	**Color**
Intrigue		**Strata**				**Vogue**	
H1292	Carbon Frozen Wood	BO11	Bianco	LN27	Barn Oak	16N	Fresno Glacial
H3158	Grey Vicenza Oak	LG18	Graphite	LN30	Vineyard Oak	5AE	Nogal Slow
H3710	Natural Carini Walnut	LK55	Palissandro	SO11	Silver Sand	98V	Roble Aurora
H1288	Stone Grey Frozen Wood	LK84	Oregon Pine	SO12	Burned	75V	Roble Azabache
H1290	White Frozen Wood	LM08	Carbone	SO13	Cypress Point	97V	Roble Colorado
U779	Fog Grey	LM67	Aspen Oak	SO15	Light Carbon	84V	Roble Denver
W1050	Coastal White	LM69	City Oak	U129	Nero	4AE	Roble Eternity
		LM96	Swiss Almond			17N	Roble Joplin
						74V	Roble Stella

Please refer to pricing through Con-Nex, our online ordering program

Synchronicity High Gloss Doors & Drawer Fronts

Conestoga's edgebanded High Gloss program incorporates two dynamic gloss materials to provide variety in both color selection and price levels. These ultra contemporary doors and drawer fronts offer spectacular sheen levels along with depth and clarity. The high gloss offering also provides a high degree of durability, with resistance to impacts, heat, household chemicals and UV discoloration.

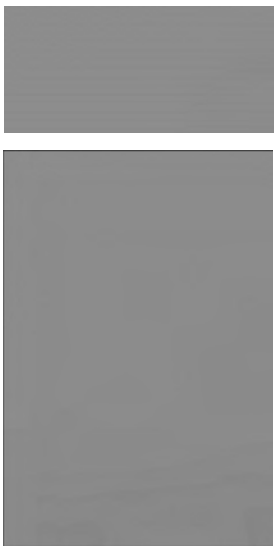

Mera Slab

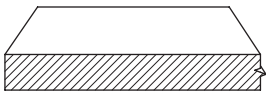

Min: 2-3/4" x 6-3/8" Max: 47-1/2" x 96"

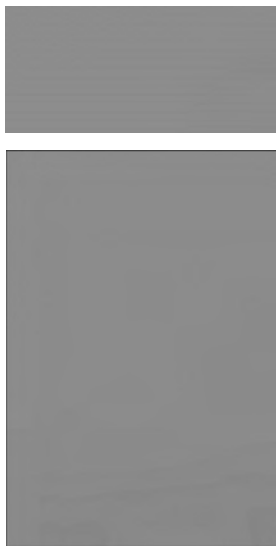

Multa Slab

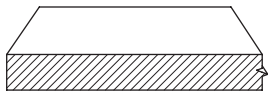

Min: 2-3/4" x 6-3/8" (vertical grain)

Max: 47-1/2" x 96" (vertical grain)

Min: 6-3/8" x 2-3/4" (horizontal grain)

Max: 96" x 47-1/2" (horizontal grain)

Vertical grain standard on door and drawer front.

High Gloss Material Charges (1.5 sq. ft. min.)	
Mera (PET)	
Multa (UV Lacquer) Standard Films	
Multa (UV Lacquer) Premium Films	

All Synchronicity High Gloss products utilize TSCA/CARB2 compliant composite cores with a high gloss film applied to the face and matching melamine applied to the back.

Offering And Availability

All Conestoga products are available in a wide variety of specifications to satisfy your custom needs. The information below indicates any exceptions or limitations pertaining to the designs on the previous page. For a detailed listing of a particular product specification, refer to the page indicated.

Material and Color Selections	
	See Color Availability and Pricing Chart on previous page.
Edge Profiles	
	All designs – design specific, no options available. Mera and Multa – 1mm ABS matching color edgeband.
Options	
pgs 5.68, 7.11-7.15	All designs – concealed hinge boring, Soss hinge boring and sample ID label. Vertical grain direction is standard on all patterned foils on Multa doors and drawer fronts, horizontal grain available. Sequential Grain Matching available with Multa patterned foils only, see following page for program details and pricing. Sequential Grain Match Order Form located in the Order Forms Section of this manual.
Mullions/Frame Only	
	Mullion doors not available. Frame only – all available in all High Gloss colors, Stile and Rail construction (list) Design Charge. Standard framing is 3", no options. Frame only doors are built using a 5-Piece door construction method. Medium grey retainer moulding included (upcharge applies). Retainer moulding conceals all visible substrate, eliminating the need to paint or mask these areas. **Note:** Frame only door pricing is calculated using the Design Charge plus the actual square footage multiplied by the material square foot charge. In addition, the following upcharge must be applied for retainer moulding: 1.0 to 4.0 sq. ft. 4.01 to 7.0 sq. ft. 7.01 sq. ft. or larger 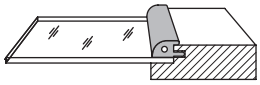 Retainer Moulding
Accessories	
pgs 5.69-5.72	Veneers, Edgeband Rolls, Cut-To-Size Panels, Full Sheets, Peel Coat Eraser, Heat Shield.

Colors/Foil Classification

	Antracita 611	Basalto 638	Black 610	Blanco 619	Bronce 662	Cashmere 655	Cobalto 663	Cuzco Oro 633
Mera	NA	NA	NA	NA	NA	NA	NA	NA
Multa	Premium	Premium	Premium	Standard	Premium	Premium	Premium	Premium
	Grey Skies 421	Gris Metallic 625	Guayana 617	Lily White 547	Olivo 618	Olmo 634	Pale Grey 650	Platino 660
Mera	Standard	NA	NA	Standard	NA	NA	NA	NA
Multa	NA	Premium	Premium	NA	Premium	Premium	Premium	Premium
	Polar 240	Roble Frapé 627	Textil Grafito 639	Textil Plata 630	Titanio 661	NA	NA	NA
Mera	Standard	NA	NA	NA	NA	NA	NA	NA
Multa	NA	Premium	Premium	Premium	Premium	NA	NA	NA

Synchronicity Super Matte Doors & Drawer Fronts

Conestoga's edgebanded Synchronicity Super Matte Program offers several popular color selections that can provide a contemporary look regardless of installation location. These 5° sheen matte doors and drawer fronts incorporate fingerprint resistance along with a high degree of durability. The Super Matte offering also provides resistance to many household chemicals, scratches, abrasions and effects of UV lighting.





Super Matte Slab

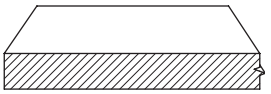

Min: 2-3/4" x 6-3/8" Max: 47-1/2" x 96"

Super Matte Material Charges (1.5 sq. ft. min.)	
Anthracite	
Black	
Calm Sea	
Eucalyptus	
Light Grey	
Midnight Sun	
North Wind	
Sunflower	
White	

All Synchronicity Super Matte products utilize TSCA/CARB2 compliant composite core materials with a matte film applied to the face and a matte laminate applied to the back.

Offering And Availability

All Conestoga products are available in a wide variety of specifications to satisfy your custom needs. The information below indicates any exceptions or limitations pertaining to the designs on the previous page. For a detailed listing of a particular product specification, refer to the page indicated.

Material and Color Selections	
	See Color Availability and Pricing Chart on previous page.
Edge Profiles	
	Super Matte Slab - design specific, no options available. Banded with 1mm ABS matching color edgeband.
Options	
pgs 7.11-7.15	All designs – Aluminum hand pulls, concealed hinge boring, Soss hinge boring and sample ID label.
Mullions/Frame Only	
	Mullion doors not available. Frame only – available in all Super Matte colors, Stile and Rail construction - (list) Design Charge. Frame only doors and built using a 5-Piece door construction method. Standard framing is 3", no options. Medium grey retainer moulding included (upcharge applies). Retainer moulding conceals all visible substrate, eliminating the need to paint or mask these areas. **Note:** Frame only door pricing is calculated using the Design Charge plus the actual square footage multiplied by the material square foot charge. In addition, the following upcharge must be applied for retainer moulding: 1.0 to 4.0 sq. ft. 4.01 to 7.0 sq. ft. 7.01 sq. ft. or larger 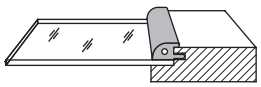 Retainer Moulding
Accessories	
pgs 5.69-5.72	Veneers, Edgeband rolls, Mouldings, Cut-to-Size Panels, Full Sheets, Touch Up Kits.

Synchronicity High Gloss Doors & Drawer Fronts

Sequential Grain Matching

- Sequential Grain Matching is available with Synchronicity High Gloss woodgrain and patterned UV Lacquer foil edgebanded Slab doors and drawer fronts. Eligible foils include: Bronce 662, Cobalto 663, Cuzco Oro 633, Gris Metallic 625, Guayana 617, Olmo 634, Olivo 618, Platino 660, Roble Frapé 627 and Titanio 661.
- Vertical or horizontal grain orientation is available and must be specified.
- Grain matching will flow through all of the associated doors and drawer fronts on individual cabinets. A maximum of 6 pieces is permitted within a sequenced grouping.
- Grain patterns will not flow continuously from cabinet to cabinet.
- Because of the width of the tooling used to cut high gloss blanks, 1/8" is consumed between each sequentially matched component.
- Each door and drawer front will be identified to designate its sequence within a cabinet. Doors and drawer fronts will be labeled on the face in the lower right corner with a numeric/alpha code combination to represent the item number and all of the related pieces to that specific item. Example: 1A, 1B, etc.
- Doors and drawer fronts requiring the Sequential Grain Match Option are priced using the Material Charge shown in the chart below.
- Maximum cabinet sizes cannot exceed 46" across the grain, or 94" with the grain.
- Additional information regarding the Sequential Grain Match Option, including configuration templates are available on the Customer Business Portal or as a PDF file. Contact your Conestoga Sales Representative or Customer Service.
- In the event that a replacement part is needed, the entire template (series of doors and drawer fronts) will need to be reordered to ensure a consistent grain match.

Synchronicity High Gloss Design Charge (Per Door/Drawer Front)	
Multa	

Synchronicity High Gloss Material Charge (1 sq. ft. min.)	
Multa (UV Lacquer) Premium Films	

Ordering Instructions

- To achieve Sequential Grain Matching, all corresponding doors and drawer fronts will be cut from an oversized blank.
- Doors and drawer fronts requiring Sequential Grain Matching must be ordered using Conestoga's Sequential Grain Matching (SGM) Templates and Order Form #2 to identify the specific cabinet configuration, position and sequence of the individual pieces within a cabinet. Templates for cabinet configurations range from 2 pieces to 6 pieces.
- Select the appropriate SGM template number that matches your cabinet configuration. Indicate the grain direction of your doors and drawer fronts (vertical or horizontal).
- Following the alpha sequence of the template, enter your doors and drawer fronts in positions A, B, C etc., width x height.
- Indicate whether each piece is being used as a door or a drawer front.
- Specify concealed hinge boring and grain direction, as well as any special instructions in the notes section.

Synchronicity Accessories

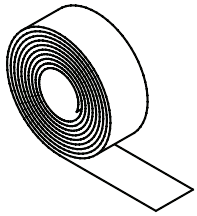

Synchronicity Edgeband

- Available in all Synchronicity High Gloss and Super Matte colors in full rolls or 125' increments.
- 1mm thick ABS High Gloss banding can be applied with PUR or EVA adhesives.
- Edgeband width is 23mm.
- Full rolls of Synchronicity edgeband vary in length. See chart below for details.

Synchronicity Edgeband Rolls		
High Gloss	**Roll Length**	**Price**
PET - Grey Skies 421, Lily White 547, Polar 240	125'	
	300'	
UV Lacquer – Antracita 611, Basalto 638, Black 610, Blanco 619, Bronce 662, Cashmere 655, Cobalto 663, Cuzco Oro 633, Gris Metallic 625, Guayana 617, Olivo 618, Olmo 634, Pale Grey 650, Platino 660, Roble Frapé 627, Textil Grafito 639, Textil Plata 630, Titanio 661	125'	
	300'	
Super Matte		
Anthracite, Black, Light Grey, White	125'	
	300'	
Calm Sea, Eucalyptus, Midnight Sun, North Wind, Sunflower	125'	
	300'	

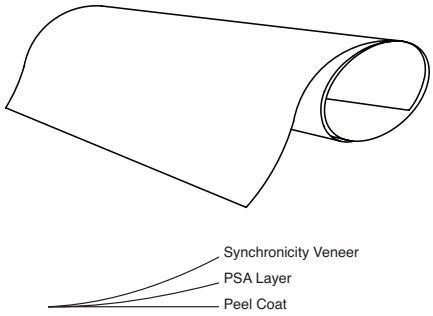

Synchronicity Veneers

- Available in select High Gloss and all Super Matte colors.
- One end and one side are guaranteed to be free from physical damage.
- Per manufacturer's recommendations, veneers should be unrolled, placed flat and allowed to acclimate 48 hours prior to application
- High Gloss UV Lacquer and Super Matte phenolic-backed veneers are available with PSA (Pressure Sensitive Adhesive) backer option – upcharge and additional lead-time applies.
- High Gloss PET foil veneers are only available with PSA backer option.
- PSA layer is a .1mm thick 3M clear pressure transfer adhesive membrane.
- PSA layer will be applied within 1/4" from one long edge the entire length of the veneer sheet.
- Adhesive width on veneer back is 48", regardless of veneer width.
- Proper surface conditions and preparation is essential to successful application and performance of veneered surfaces.
- PSA veneers should not be applied to bare solid wood or surfaces covered with sanding sealers, high pressure laminates, melamine or other plastic materials.
- Conestoga is not liable for product failure due to improper surface preparation or installation technique.

Synchronicity Veneers						
High Gloss	**Sheet Size**	**Thickness w/no PSA**	**Thickness w/PSA**	**Lead-time w/no PSA**	**Lead-time w/PSA**	**PSA Upcharge**
PET: Grey Skies 421, Lily White 547, Polar 240	50" x 97"	NA	.4mm	NA	7 days	NA
UV Lacquer: Anthracite 611, Basalto 638, Black 610, Blanco 619, Cashmere 655, Pale Grey 650 (Available August 2024)	47-1/4" x 96"	.7mm	.8mm	3 days	7 days	
Super Matte						
Anthracite, Black, Light Grey, White	48" x 120"	.8mm	.9mm	3 days	7 days	
Calm Sea, Eucalyptus, Midnight Sun, North Wind, Sunflower	52" x 108"	.8mm	.9mm	3 days	7 days	

*Add PSA application charge to the veneer sheet cost.

Synchronicity Accessories

Synchronicity L-Moulding

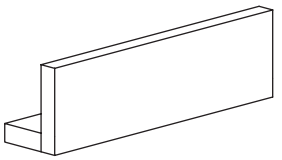

- Accent or trim moulding can be used as fascia or under cabinets as a Light Rail.
- Face width can be customized in 1/16" increments from 2-3/4" to 8". Mounting plate is 2-3/4" wide - not customizable.
- Moulding Cut-Down Option available.
- Matching color edgebanding is standard. All edges are banded including ends.

Synchronicity L-Moulding (per 96" length)		
Color	**Face Width** 2-3/4" to 4"	**Face Width** 4-1/16" to 8"
Super Matte		
Mera (PET) Standard		
Multa Standard		
Multa Premium		

Synchronicity Narrow Overlay Filler

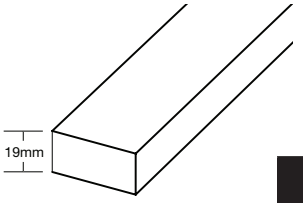

- Narrow Overlay Filler (19mm thick) can be applied to installation fillers for full overlay trim applications.
- Filler width can be customized in 1/16" increments from 1-1/2" to 2-11/16" in width and lengths from 12" to 96".
- All edges are banded with matching edgeband - no option.
- Sold in pairs - no option.

Synchronicity Narrow Overlay Filler (1.5 sq. ft. min.)		
Color	**Design Charge (per pair)**	**Material Charge**
Super Matte		
Mera (PET) Standard		
Multa Standard		
Multa Premium		

Synchronicity Scribe Moulding

- All colors available in 96" length.
- Moulding Cut-Down Option available on all colors.
- Anthracite Matte, Black Matte, Light Grey Matte, White Matte.
  - Scribe is 5/16" thick x 1" wide.
  - Scribe moulding is wrapped, not edgebanded.
  - Sold individually.
- All High Gloss and select Super Matte colors: Calm Sea, Eucalyptus, Midnight Sun, North Wind, Sunflower.
  - Scribe moulding is 3/8" thick x 3/4" wide x 96" long.
  - Scribe is manufactured utilizing 19mm edgebanded panels edgebanded on the face and both short edges of the moulding, while the two 3/8" thick long edges are the matching melamine board surface. The back of the moulding is uncoated for installation.
  - Scribe Mouldings are shipped with an additional support piece to provide reinforced stability throughout the delivery process.
  - Sold in pairs - no option.

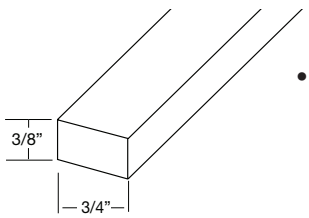

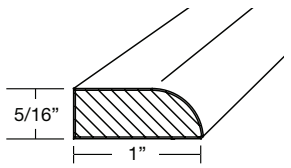

*Anthracite Matte, Black Matte, Light Grey Matte, White Matte.

Synchronicity Scribe Moulding	
Color	**Price per Piece**
PET - Grey Skies 421, Lily White 547, Polar 240	
UV Lacquer - Anthracita 611, Black 610, Blanco 619, Cashmere 655, Pale Grey 650	
UV Lacquer – Basalto 638, Bronce 662, Cobalto 663, Cuzco Oro 633, Gris Metallic 625, Guayana 617, Olivo 618, Olmo 634, Platino 660, Roble Frapé 627, Textil Grafito 639, Textil Plata 630, Titanio 661	
Super Matte	
Anthracite, Black, Light Grey, White	
Calm Sea, Eucalyptus, Midnight Sun, North Wind, Sunflower	

Synchronicity Accessories (continued)

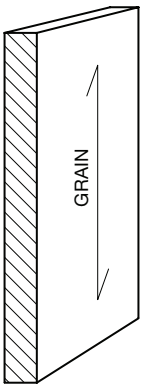

Cut-to-Size Synchronicity Panels

- It is assumed that all Synchronicity High Gloss and Super Matte Cut-to-Size Panels, regardless of size, will be mounted onto or against another surface leaving the melamine backer hidden after installation. Therefore, Conestoga's specfications allow scuffs, scratches, drag marks, small indentations and slight color variations on panel backs, which will not be considered defective. Cut-to-Size Panel faces and edges, whether banded or non-banded will be produced to the same high quality standards as our doors and drawer fronts. Should a clear panel back be required for a specific application, order as a door.
- Cut-to-Size pricing:
  - Design Charge.
  - Non-edgebanded panel: Min. – 2-1/2" x 2-1/2".
    Max. – 48" x 96" (vertical grain).
- Edgeband Options:
  - Design Charge, regardless of number of edges receiving edgeband.
  - ABS edgeband applied to 1 to 4 edges.
  - Edgebanded panel: Min. – 2-3/4" x 6-3/8", Max. – 47-1/2" x 96" (vertical grain).

Synchronicity Cut-to-Size Panels (1.5 sq. ft. min.)			
Material **High Gloss**	**Thickness**	**Non-Edgebanded** (per sq. ft.)	**Edgebanded** (per sq. ft.)
Mera Standard	19mm		
Multa Standard	18mm		
Multa Premium	18mm		
Super Matte			
Anthracite, Black, Calm Sea, Eucalyptus, Light Grey, Midnight Sun, North Wind, Sunflower, White	19mm		

Synchronicity High Gloss and Super Matte Full Sheets

- Full sheets dimensions vary. See chart below for details.
- Face of all sheet stock consists of Synchronicity High Gloss and Super Matte film with protective peel coat. Back of all sheet stock consists of a matte laminate.
- The substrate of all Synchronicity materials consists of TSCA/CARB2 compliant composite material.
- Full sheets of Synchronicity High Gloss and Super Matte material will not be edgebanded. If a full sheet requires edgeband order as a Mera, Multa or Super Matte Slab door.

Synchronicity Full Sheets				
Material **High Gloss**	**Color**	**Sheet Thickness**	**Sheet Size**	**Price per sheet**
Mera (PET) Standard	Polar 240, Grey Skies 421, Lily White 547	19mm	48" x 108"	
Multa (UV Lacquer) Standard	Blanco 619	18mm	48" x 108"	
Multa (UV Lacquer) Premium	Antracita 611, Basalto 638, Black 610, Bronce 662, Cashmere 655, Cobalto 663, Cuzco Oro 633, Gris Metallic 625, Guayana 617, Olivo 618, Olmo 634, Pale Grey 650, Platino 660, Roble Frapé 627, Textil Grafito 639, Textil Plata 630, Titanio 661	18mm	48" x 108"	
Super Matte	Anthracite, Black, Light Grey, White	19mm	48" x 110"	
	Calm Sea, Eucalyptus, Midnight Sun, North Wind, Sunflower	19mm	49" x 108"	

Synchronicity Accessories (continued)

Heat Shield

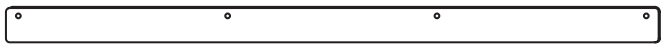

- 1-1/2" x 30" epoxy coated finish.
- 22 gauge aluminum, pre-drilled for easy installation.
- Designed to be mounted on cabinet sides next to heat generating appliances such as ovens and protects edges of doors from heat during oven cleaning.
- Should be installed flush with face of door.
- To order, use part #2602591A for Flat Black or part #2602592A for Flat White.

Synchronicity Super Matte Touch Up Kits

Synchronicity Super Matte material is resistant to surface scratches, dents and normal wear. For care of minor surface abrasions, a Touch Up Kit has been carefully matched for each Super Matte color.

- Kit includes a color marker and fil-stick.
- Order kit by color from chart below.

Synchronicity Super Matte Touch Up Kit	
Color	
Anthracite	Calm Sea
Black	Eucalyptus
Light Grey	Sunflower
White	Midnight Sun
	North Wind

High Gloss Peel Coat Eraser

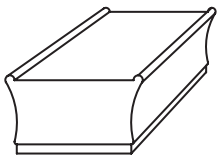

- 3-7/8" x 1-5/8" x 1-5/8".
- Wooden handle with specialized rubber base that helps grip protective peel coat.
- Used to ease removal of the protective peel coat from the face and edges of high gloss products after cabinet installation is complete, but prior to installation of decorative hardware.
- To order, use part #2602540A.

Please refer to pricing through Con-Nex, our online ordering program

5-Piece Wood and MDF Frame Only Doors

Most Conestoga wood and MDF door designs are available with a frame only option to complement your solid panel door designs. Frame only doors are a perfect accent and can accommodate a wide array of decorative glass, wire mesh, Leather Panels and other inserts.

Frame Only Pricing

To calculate frame only door square footage, first determine the square footage of the door using the actual exterior door dimensions. If the door is 3.00 square feet or less, substitute 10" for the width of the door, regardless of actual width. If the door is 3.01 square feet or larger, substitute 12" for the width of the door, regardless of the actual width. Use the 10" or 12" width multiplied by the actual height, divided by 144 to arrive at the square footage that will be invoiced. Multiply the square footage by the appropriate Material Charge found in the Material Pricing Guide. Add the Material Charge to the Design Charge of the desired door style. A retainer moulding fee as described below will be added to the frame only door charge.

Note: For TW and CRP designs, use the CRP Design Charge and Category B Material Charge. For example: TW-10 and CRP-10 both use the CRP-10 Design Charge. Most applied moulding designs use Material Category C.

Frame only products exceeding 50" in width and height receive a upcharge for manual sanding and special handling.

Frame Only Retainer Moulding

All frame only doors are automatically grooved to accept our clear glass moulding. The clear glass retainer moulding is shipped with the door unless one of the four alternative wood retainer mouldings shown below is requested. Even if a wood retainer is selected, the framing will be grooved to accept the clear retainer moulding unless the customer requests that the framing not be grooved. Clear retainer moulding will be shipped as one continuous piece and must be cut to size and installed by the customer. All wood retainer mouldings are cut to size by Conestoga and must be installed by the customer. Linear inch pricing for all retainer mouldings appears in the illustrations below. The appropriate moulding charge is multiplied by the total number of inches required and included within the frame only door price.

Frame Only and Mullion Framing Options

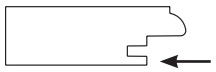

Regular bead shown

Frame only doors come standard with glass retainer moulding groove.

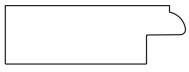

Non-grooved framing is available. Simply specify “No rout for retainer moulding" in the special instructions portion of the order form.

Retainer Moulding Options (specify moulding number)

Clear (standard) for 1/8" glass only.

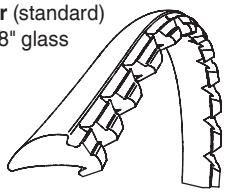

Clear - $.07 per linear inch.

#906 for 1/8" glass only.

#907 for 1/4" glass.

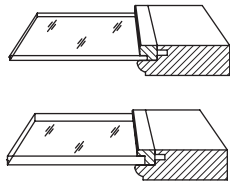

#906 and #907 - $.10 per linear inch.

#52 for varying glass thickness.

Wood moulding

#83 (similar to #52) for Bristol, Cortland and TW-10916. Wood retainer mouldings should be predrilled to avoid splitting.

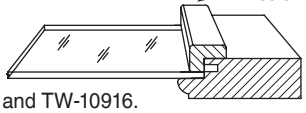

#52 and #83- $.10 per linear inch.

5-Piece Wood and MDF Mullion Doors

Conestoga offers a wide variety of mullion configurations and options. Mullions illustrated on the following pages are only a representation of the available patterns. Contact our Special Designs Department for additional mullion information. MDF mullion doors will be constructed with MDF framing and Paint Grade Hard Maple mullion strips.

Mullion Pricing

To calculate mullion door square footage, first determine the square footage of the door using the actual exterior door dimensions. If the door is 3.00 square feet or less, substitute 10" for the width of the door, regardless of actual width. If the door is 3.01 square feet or larger, substitute 12" for the width of the door, regardless of the actual width. Use the 10" or 12" width multiplied by the actual height, divided by 144 to arrive at the square footage that will be invoiced. Multiply the square footage calculation by the appropriate Material Charge found in the Material Pricing Guide. Add the Material Charge to the Design Charge of the desired door style. Lite charges and a retainer moulding fee as described below must be added to the framing charge.

- For TW and CRP designs, use the CRP Design Charge and Category B Material Charge. For example: TW-10 and CRP-10 both use the CRP-10 Design Charge.
- Availability of miter and applied moulding mullion doors is listed throughout the Doors and Drawer Fronts Section and the MDF/Alternative Materials Section. Use published Design Charge plus Material Category.
- Most miter designs default to Regular bead profile on the mullion strips. Contact Customer Service for mullion profile confirmation.

Wood and 5-Piece MDF Mullion Design Options		
Design	**Price**	**Design Notes**
F-007, Regular and Ogee bead mullions		• Fitted for one piece of glass per door.
F-1223, Square bead mullions		
Elite, F-877, Special (mullion bead differs from framing bead)		• Fitted for one piece of glass per door. • Special mullions apply to all miter designs except CRP-10 Miter.
Odd mullion configuration *Odd mullion configuration 1-Piece MDF doors will be priced by our Special Designs Department.*		
True Divided Lites F-007, Regular and Ogee bead mullions		• Fitted for individual pieces of glass per lite. • These doors have 7/8" wide mullions unless otherwise specified. • Glass retainer moulding not supplied.
F-1223, Square bead mullions		
F-877, Elite/Special (mullion bead differs from framing bead)		
Odd mullion configuration		

Mullion Width Details	
Framing Bead	**Mullion Width**
Regular	5/8" wide for 3/4" thick doors 3/4" wide for 1" thick doors
Elite, F-877, F-1223, Square	5/8"
F-007	15/16"
Ogee	7/8"

Frame Only and Mullion Framing Options

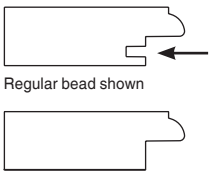

Regular bead shown

- Mullion doors come standard with glass retainer moulding groove.
- Non-grooved framing is available. Simply specify “No rout for retainer moulding” in the special instructions portion of the order form.

All mullion doors are automatically grooved to accept our clear glass moulding. The clear glass retainer moulding is shipped with the door unless one of the four alternative wood retainer mouldings shown on the following page is requested. Even if a wood retainer is selected, the framing will be grooved to accept the clear retainer moulding unless the customer requests that the framing not be grooved. Clear retainer moulding will be shipped as one continuous piece and must be cut to size and installed by the customer. All wood retainer mouldings are cut to size by Conestoga and must be installed by the customer. Linear inch pricing for all retainer mouldings appears in the illustrations on the following page. The appropriate moulding charge is multiplied by the total number of inches required and included within the mullion door price.

Retainer Moulding Options

Retainer Moulding Options (specify moulding number)		
Clear (standard) for 1/8" glass only. 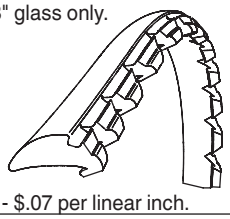 Clear - $.07 per linear inch.	**#906** for 1/8" glass only. 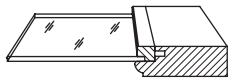 **#907** for 1/4" glass. 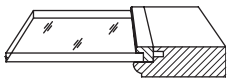 #906 and #907 - $.10 per linear inch.	**#52** for varying glass thickness. 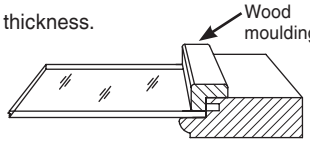 **#83** (similar to #52) for Bristol, Cortland and TW-10916. Wood retainer mouldings should be predrilled to avoid splitting. #52 and #83 - $.10 per linear inch.

1-Piece MDF Mullion and Frame Only Doors

1-Piece MDF Mullion and Frame Only Pricing		
Design	**Design Charge**	**Material Charge**
Radius Corner Series	Design Charge x 1.25	Calculate Material Charge using actual square footage (width x height) ÷ 144 x appropriate Material Charge.
Square Corner Series	Design Charge x 1.6	
Mullion Lite Options Mullion lite placement will be balanced. Indicate number of lites desired.		
Design	**Price**	**Design Notes**
Standard Lites		• Standard mullion lites with radius corners are fitted for one piece of glass and used on RC Series doors. • Mullions available: 10RC, 10RC2, 10SQF1, 10SQF2, 10SQF4, 10SQF5, 10SQF6 and 10SQF7.
Special Lites		• Special mullion lites are fitted for one piece of glass, have square corners, and are used on applicable SQ Series doors. • Mullions available: 10SQ3 and 10SQ5.
Clear plastic moulding is standard on MDF mullion doors. If using glass other than 1/8" thick, specify our #52 moulding retainer.		

Frame Only with Panel

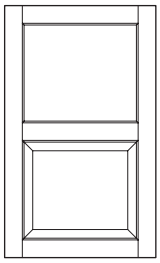

- Most 5-piece wood and MDF door designs are available with a frame only and panel.
- Only available as a 2 opening upright door. Specify frame only opening dimensions.
- All published wood species and select MDF designs are available.
- All 3/4" framing beads available. Regular, Ogee and Square also available in 1".
- For panel, all published panel raises and plywood panel designs are available (subject to design limitations).
- Clear retainer moulding standard unless otherwise specified. Wood retainer moulding or no retainer moulding options available.
- List pricing is Design Charge x 2 plus option charge. For Miter designs add an additional costfor midrail.
- Mullion with panel also available.
- True divided lite option available. Upcharge applies.

Mullion Doors

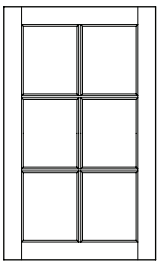

Standard Lite Mullion

- Specify 4-lite, 6-lite, 8-lite, 10-lite or 12-lite when ordering.
- All lites will be evenly spaced unless otherwise requested. Odd mullion configuration charges will apply if custom spacing is requested.
- Standard Lite Mullions will be configured two lites wide regardless of size unless otherwise requested.
- All 3/4" framing beads available. Regular, Ogee, Square and Elite also available in 1".
- Matching mullion profiles in F-007, F-1223, Regular, Ogee and Square. Elite and F-877 framing beads receive Regular bead mullion profile.
- Minimum door size – 7-7/8" x 7-7/8" with 2-1/4" wide framing.
- Clear plastic retainer moulding standard unless otherwise specified. Wood retainer moulding or no retainer moulding options available.
- True divided lite option available. Upcharge applies.

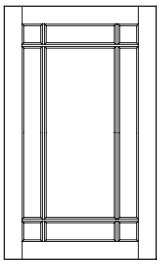

9-Lite Offset Mullion*

- 9-lite Offset Mullion features 2" x 2" corner lites standard.
- All 3/4" framing beads available. Regular, Ogee, Square and Elite also available in 1".
- Matching mullion profiles in F-007, F-1223, Regular, Ogee and Square. Elite and F-877 framing beads receive Regular bead mullion profile.
- Minimum door size – 11-7/8" x 11-7/8" with 2-1/4" wide framing.
- Clear plastic retainer moulding standard unless otherwise specified. Wood retainer moulding or no retainer moulding options available.
- Odd mullion configurations upcharge applies.
- True divided lite option available. Upcharge applies.

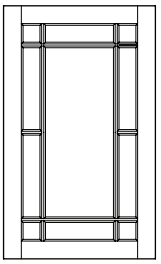

11-Lite Offset Mullion*

- 11-lite Offset Mullion features 2" x 2" corner lites standard.
- All 3/4" framing beads available. Regular, Ogee, Square and Elite also available in 1".
- Matching mullion profiles in F-007, F-1223, Regular, Ogee and Square. Elite and F-877 framing beads receive Regular bead mullion profile.
- Minimum door size – 11-7/8" x 14-5/8" with 2-1/4" wide framing.
- Clear plastic retainer moulding standard unless otherwise specified. Wood retainer moulding or no retainer moulding options available.
- Odd mullion configurations upcharge applies.
- True divided lite option available. Upcharge applies.

***Caution**: Long, continuous mullion strips are highly susceptible to bowing and warping. This condition is typically the result of moisture absorption and expansion of door framing which applies pressure against the mullion strips. Conestoga does not warranty mullions that bow due to exposure to high humidity conditions or environments. A clear adhesive applied between the back of the mullion strip and glass panel may help reduce the amount of noticeable mullion movement. Standard lite mullions are recommended for use in high moisture conditions.

Mullion Doors (continued)

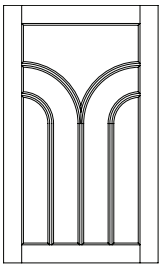

Cascade Mullion

- Features 5 radius lites.
- 3/4" F-007, F-1223, Regular, Ogee and Square framing beads available. Regular, Ogee and Square also available in 1".
- Matching mullion profiles in F-007, F-1223, Regular, Ogee and Square.
- Minimum door size – 12-3/4" x 12-3/4" with 2-1/4" wide framing.
- Clear plastic retainer moulding standard unless otherwise specified. Wood retainer moulding or no retainer moulding options available.
- Must be quoted through Special Designs.
- Configuration not available with all sizes. A drawing will be sent to customer for approval prior to manufacturing process beginning.

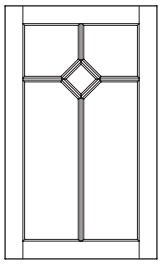

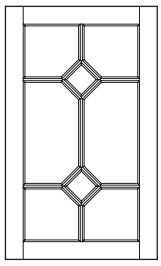

Diamond Mullion*/Double Diamond Mullion*

- Diamond Mullion features a 4" x 4" diamond lite centered in the width of the door opening and 4-1/2" from the top rail. The Double Diamond Mullion features two 4" x 4" diamond lites centered in the width of the door opening and 4-1/2" from top and bottom rails.
- All 3/4" framing beads available. Regular, Ogee, Square and Elite also available in 1".
- Matching mullion profiles in F-007, F-1223, Regular, Ogee and Square. Elite and F-877 framing beads receive Regular bead mullion profile.
- Diamond Mullion minimum door size – 12-5/8" x 18-5/8" with 2-1/4" wide framing. Double Diamond minimum door size – 12-5/8" x 25-1/4" with 2-1/4" wide framing.
- Clear plastic retainer moulding standard unless otherwise specified. Wood retainer moulding or no retainer moulding options available.
- Diamond Mullion receives a 5 lite Design Charge. Double Diamond Mullion receives an 8 lite Design Charge.
- Odd mullion configurations upcharge applies.
- For Diamond Mullion pricing add list to door Design Charge, then add individual lite charges and odd configuration upcharge. For Double Diamond Mullion pricing add list to door Design Charge, then add individual lite charges and odd configuration upcharge.

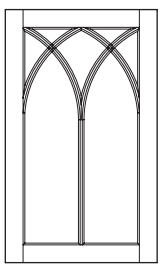

Arched Lite Mullion*

- Arched Lite Mullions feature 7 radius lites.
- All 3/4" framing beads available except F-877, F-1223 and Elite. Regular, Ogee and Square also available in 1". Ogee and F-007 framing beads may burnish when coped.
- Matching mullion profiles in F-007, Regular, Ogee and Square.
- Minimum door size – 11-5/8" x 9-5/8" with 2-1/4" wide framing.
- Clear plastic retainer moulding standard unless otherwise specified. Wood retainer moulding or no retainer moulding options available.
- Arched Lite Mullions will be quoted through Special Designs.
- Configuration not available in all sizes. A drawing will be sent to customer for approval prior to manufacturing process beginning.

***Caution**: Long, continuous mullion strips are highly susceptible to bowing and warping. This condition is typically the result of moisture absorption and expansion of door framing which applies pressure against the mullion strips. Conestoga does not warranty mullions that bow due to exposure to high humidity conditions or environments. A clear adhesive applied between the back of the mullion strip and glass panel may help reduce the amount of noticeable mullion movement. Standard lite mullions are recommended for use in high moisture conditions.

Mullion Doors (continued)

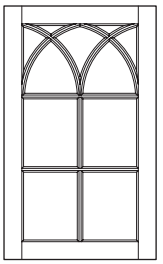

Arch Lite with Horizontal Lite Mullion

- Features 11 radius lites – rectangular lites will vary depending on height of door.
- 3/4" F-007, F-1223, Regular, Ogee and Square framing beads available. Regular, Ogee and Square also available in 1". Ogee and F-007 framing beads may burnish when coped.
- Matching mullion profiles in F-007, F-1223, Regular, Ogee and Square.
- Minimum door size – 11-5/8" x 9-5/8" with 2-1/4" wide framing.
- Clear plastic retainer moulding standard unless otherwise specified. Wood retainer moulding or no retainer moulding options available.
- Must be quoted through Special Designs.
- Configuration not available in all sizes. A drawing will be sent to customer for approval prior to manufacturing process beginning.

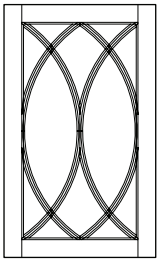

Continuous Double Arched Lite Mullion*

- Continuous Double Arched Lite Mullions feature 12 radius lites.
- All 3/4" framing beads available except F-877 and Elite. Regular, Ogee and Square also available in 1". Ogee and F-007 framing bead may burnish when coped.
- Matching mullion profiles in F-007, F-1223, Regular, Ogee and Square.
- Minimum door size – 11-5/8" x 14-15/16" with 2-1/4" wide framing.
- Clear plastic retainer moulding standard unless otherwise specified. Wood retainer moulding or no retainer moulding options available.
- Continuous Double Arched Lite Mullions quoted through Special Designs.
- Configuration not available in all sizes. A drawing will be sent to customer for approval prior to manufacturing.

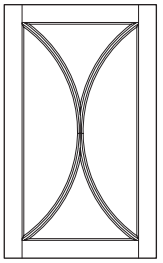

Double Bow Mullion

- Features 4 radius lites. Two symmetrical arches intersect in center of door opening.
- All 3/4" framing beads available. Regular, Ogee, Square and Elite also available in 1".
- Matching mullion profiles in F-007, F-1223, Regular, Ogee and Square. Elite and F-877 framing beads receive Regular bead mullion profile.
- Minimum door size – 11-5/8" x 11-5/8" with 2-1/4" wide framing.
- Clear plastic retainer moulding standard unless otherwise specified. Wood retainer moulding or no retainer moulding options available.
- Must be quoted through Special Designs.
- Configuration not available with all sizes. A drawing will be sent to customer for approval prior to manufacturing process beginning.

***Caution**: Long, continuous mullion strips are highly susceptible to bowing and warping. This condition is typically the result of moisture absorption and expansion of door framing which applies pressure against the mullion strips. Conestoga does not warranty mullions that bow due to exposure to high humidity conditions or environments. A clear adhesive applied between the back of the mullion strip and glass panel may help reduce the amount of noticeable mullion movement. Standard lite mullions are recommended for use in high moisture conditions.

Mullion Doors (continued)

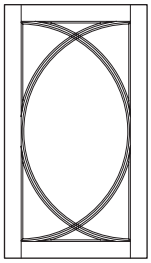

Vesica Mullion

- Features 7 radius lites.
- 3/4" F-007, F-1223, Regular, Ogee and Square framing beads available. Regular, Ogee and Square also available in 1".
- Matching mullion profiles in F-007, F-1223, Regular, Ogee and Square.
- Minimum door size – 8-5/8" x 15-15/16" with 2-1/4" wide framing.
- Clear plastic retainer moulding standard unless otherwise specified. Wood retainer moulding or no retainer moulding options available.
- Must be quoted through Special Designs.
- Configuration not available with all sizes. A drawing will be sent to customer for approval prior to manufacturing process beginning.

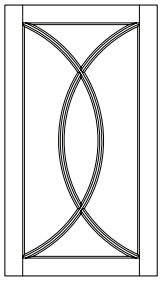

Double Bow Elipse Mullion

- Features 5 radius lites.
- All 3/4" framing beads available. Regular, Ogee, Square and Elite also available in 1".
- Matching mullion profiles in F-007, F-1223, Regular, Ogee and Square. Elite and F-877 framing beads receive Regular bead mullion profile.
- Minimum door size – 11-5/8" x 11-5/8" and 2-1/4" wide framing.
- Clear plastic retainer moulding standard unless otherwise specified. Wood retainer moulding or no retainer moulding options available.
- Must be quoted through Special Designs.
- Configuration not available in all sizes. A drawing will be sent to customer for approval prior to manufacturing process beginning.

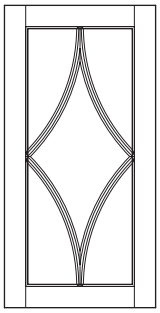

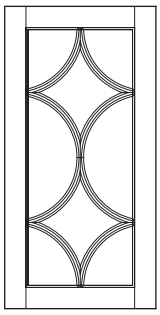

Single/Double Diamond Swag Mullion

- Features concave-shaped diamond(s) with 5 lites for Single Mullion and 8 lites for Double Mullion.
- All 3/4" framing beads available except F-877 and Elite. Regular, Ogee and Square also available in 1". Ogee and F-007 framing beads may burnish when coped.
- Matching mullion profiles in F-007, F-1223, Regular, Ogee and Square.
- Minimum door size –
  Single – 11-5/8" x 11-5/8" with 2-1/4" wide framing.
  Double – 11-5/8" x 23".
- Clear plastic retainer moulding standard unless otherwise specified. Wood retainer moulding or no retainer moulding options available.
- Must be quoted through Special Designs.
- Configuration not available with all sizes. A drawing will be sent to customer for approval prior to manufacturing process beginning.

Mullion Doors (continued)

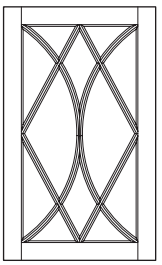

Double Bow Diamond Mullion

- Features double arch mullions and centered diamond with total of 12 lites.
- All 3/4" framing beads available except Elite. Regular, Ogee and Square also available in 1".
- Matching mullion profiles in F-007, F-1223, Regular, Ogee and Square. F-877 framing bead receives Regular bead mullion profile.
- Minimum door size – 11-5/8" x 14-15/16" with 2-1/4" wide framing.
- Clear plastic retainer moulding standard unless otherwise specified. Wood retainer moulding or no retainer moulding options available.
- Must be quoted through Special Designs.
- Configuration not available with all sizes. A drawing will be sent to customer for approval prior to manufacturing process beginning.

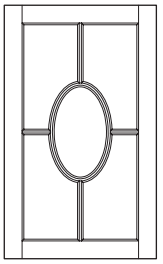

Elliptical Mullion*

- Features an elliptical shape centered in the middle of the door opening.
- Minimum opening of the elliptical shape is 2-1/2" x 5". Must specify size of the centered elliptical shape.
- All 3/4" framing beads available. Regular, Ogee, Square and Elite also available in 1".
- Matching mullion profiles in F-007, F-1223, Regular, Ogee and Square. Elite and F-877 framing beads receive Regular bead mullion profile.
- Minimum door size – 12-5/8" x 13-5/8" with 2-1/4" wide framing.
- Clear plastic retainer moulding standard unless otherwise specified. Wood retainer moulding or no retainer moulding options available.
- Must be quoted through Special Designs.
- A drawing will be sent to customer for approval prior to manufacturing process beginning.

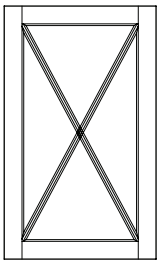

X-Lite Mullion*

- Features diagonal crisscrossed mullion pattern.
- All 3/4" framing beads available. Regular, Ogee, Square and Elite beads also available in 1".
- Matching mullion profiles in F-007, F-1223, Regular, Ogee and Square. Elite and F-877 framing beads receive Regular bead mullion profile.
- Minimum door size – 8-5/8" x 8-5/8" with 2-1/4" wide framing.
- Clear plastic retainer moulding standard unless otherwise specified. Wood retainer moulding or no retainer moulding options available.
- X-Lite Mullion receives a 4 lite Design Charge.
- Odd mullion configurations upcharge applies.
- For X-Lite Mullion pricing add list to door Design Charge, then add individual lite charges and odd configuration upcharge.

***Caution**: Long, continuous mullion strips are highly susceptible to bowing and warping. This condition is typically the result of moisture absorption and expansion of door framing which applies pressure against the mullion strips. Conestoga does not warranty mullions that bow due to exposure to high humidity conditions or environments. A clear adhesive applied between the back of the mullion strip and glass panel may help reduce the amount of noticeable mullion movement. Standard lite mullions are recommended for use in high moisture conditions.

Mullion Doors (continued)

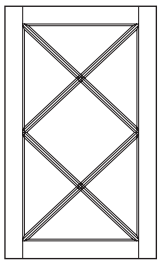

Double X Mullion / Double X Horizontal Lite Mullion

- Features two diagonal crisscrossed mullion patterns.
- Available with or without one centered horizontal mullion.
- All 3/4" framing beads available. Regular, Ogee, Square and Elite beads also available in 1".
- Matching mullion profiles in F-007, F-1223, Regular, Ogee and Square. Elite and F-877 framing beads receive Regular bead mullion profile.
- Minimum door size – 8-5/8" x 13-1/8" with 2-1/4" wide framing.
- Clear plastic retainer moulding standard unless otherwise specified. Wood retainer moulding or no retainer moulding options available.
- Double X Mullion receives a 7 lite Design Charge; Double X Horizontal Lite Mullion receives an 8 lite Design Charge.
- Double X and Double X Horizontal Lite Mullion openings are equal.
- Odd mullion configurations upcharge applies.
- For Double X Mullion pricing add list to door Design Charge, then add individual lite charges and odd configuration upcharge. For Double X Horizontal Lite Mullion pricing add list to door Design Charge, then add individual lite charges and odd configuration upcharge.

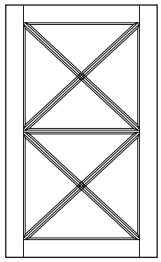

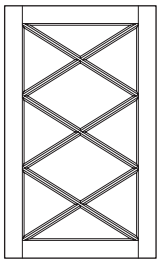

Triple X Mullion / Triple X Horizontal Lite Mullion

- Features three diagonal crisscrossed mullion patterns.
- Available with or without two centered horizontal mullions.
- All 3/4" framing beads available. Regular, Ogee, Square and Elite beads also available in 1".
- Matching mullion profiles in F-007, F-1223, Regular, Ogee and Square. Elite and F-877 framing beads receive Regular bead mullion profile.
- Minimum door size – 8-5/8" x 17-3/4" with 2-1/4" wide framing.
- Clear plastic retainer moulding standard unless otherwise specified. Wood retainer moulding or no retainer moulding options available.
- Triple X Mullion receives a 10 lite Design Charge; Triple X Horizontal Lite Mullion receives a 12 lite Design Charge.
- Triple X and Triple X Horizontal Lite Mullion openings are equal.
- Odd mullion configurations upcharge applies.
- For Triple X Mullion pricing add list to door Design Charge, then add individual lite charges and odd configuration upcharge. For Triple X Horizontal Lite Mullion pricing addist to door Design Charge, then add individual lite charges and odd configuration upcharge.

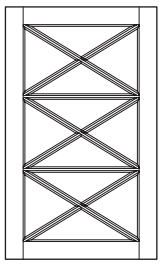

***Caution**: Long, continuous mullion strips are highly susceptible to bowing and warping. This condition is typically the result of moisture absorption and expansion of door framing which applies pressure against the mullion strips. Conestoga does not warranty mullions that bow due to exposure to high humidity conditions or environments. A clear adhesive applied between the back of the mullion strip and glass panel may help reduce the amount of noticeable mullion movement. Standard lite mullions are recommended for use in high moisture conditions.

Mullion Doors (continued)

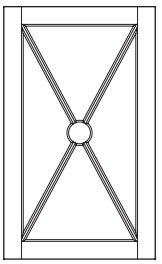

X-Lite w/Solid Hub

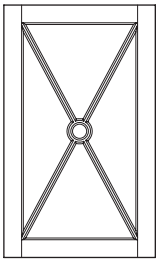

X-Lite w/Open Hub

X-Lite with Solid Hub Mullion* / X-Lite with Open Hub Mullion*

- Features diagonal crisscrossed mullion pattern with hub centered in the door opening. Hub can be open or solid.
- Open hub diameter is dependent on framing bead profile. Open hub with F-1223, Regular, Square and Elite beads will receive 3" diameter hub. Ogee bead will receive a 3-1/4" diameter hub. F-007 bead will receive a 3-7/8" diameter hub.
- Solid hubs for F-1223, Regular, Square and Elite bead mullions receive a 2" diameter hub. F007 and Ogee beads will receive a 3" diameter hub.
- All 3/4" framing beads available. Regular, Ogee, Square and Elite beads also available in 1".
- Matching mullion profiles in F-007, F-1223, Regular, Ogee and Square. Elite and F-877 beads receive Regular bead mullion profile.
- Minimum door size – 9-5/8" x 9-5/8" with 2-1/4" wide framing.
- Clear plastic retainer moulding standard unless otherwise specified. Wood retainer moulding or no retainer moulding options available.
- X-Lite with Open Hub Mullion receives a 5 lite Design Charge; X-Lite with Solid Hub Mullion receives a 4 lite Design Charge.
- Odd mullion configurations upcharge applies.
- For X-Lite with Open Hub Mullion pricing add list to door Design Charge, then add individual lite charges. For X-Lite with Solid Hub Mullion pricing add list to door Design Charge, then add individual lite charges.
- Contact Special Designs for quote.

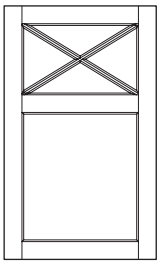

X-Lite Panel Mullion

- Features two-panel door with diagonal crisscrossed mullion pattern in top opening and a panel or frame only in the bottom opening.
- Customer must specify top opening size.
- All 3/4" framing beads available. Regular, Ogee, Square and Elite beads also available in 1".
- Matching mullion profiles in F-007, F-1223, Regular, Ogee and Square. Elite and F-877 beads receive Regular bead mullion profile.
- Minimum door size – 8-5/8" x 15-1/8" with 2-1/4" wide framing.
- Clear plastic retainer moulding standard unless otherwise specified. Wood retainer moulding or no retainer moulding options available.
- X-Lite with Panel Mullion receives a 4 lite Design Charge.
- Odd mullion configurations upcharge applies.
- For X-Lite with Panel Mullion pricing add list to door Design Charge, then add individual lite charges and odd configuration upcharge.

***Caution**: Long, continuous mullion strips are highly susceptible to bowing and warping. This condition is typically the result of moisture absorption and expansion of door framing which applies pressure against the mullion strips. Conestoga does not warranty mullions that bow due to exposure to high humidity conditions or environments. A clear adhesive applied between the back of the mullion strip and glass panel may help reduce the amount of noticeable mullion movement. Standard lite mullions are recommended for use in high moisture conditions.

Mullion Doors (continued)

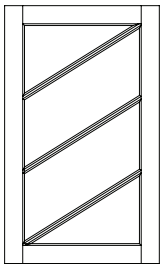

Chevron 4 Lite Up

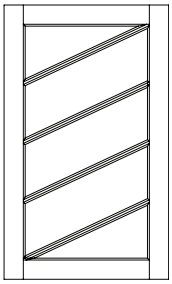

Chevron 5 Lite Up

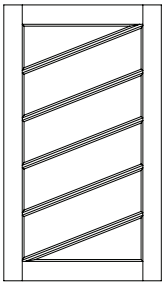

Chevron 6 Lite Up

Chevron Mullion – Up & Down Patterns

- Chevron mullions are available in 2, 3, 4, 5 and 6 lite openings.
- Lite openings will be equally spaced.
- When ordering, specify desired number of lites, and whether diagonal mullion strips should be installed in an upward or downward direction.
- All 3/4" framing beads available. 1" framing beads available in F-007, F-1223, Ogee, Regular and Square.
- Matching mullion profiles available in F-007, F-1223, Ogee, Regular and Square. Elite and F-877 receive Regular bead mullion profiles.
- Odd mullion configuration upcharge applies, regardless of profile or number of lites.
- Clear plastic retainer moulding standard unless otherwise specified. Wood retainer moulding or no retainer moulding options available.
- The following shows price adders and minimum door sizes per the number of lites chosen - assumes 2-1/4" framing.
  - 2 lites: list — Minimum door size: 7-1/2" x 7-1/2"
  - 3 lites: list — Minimum door size: 7-1/2" x 10-1/2"
  - 4 lites: list — Minimum door size: 7-1/2" x 11-1/2"
  - 5 lites: list — Minimum door size: 7-1/2" x 15"
  - 6 lites: list — Minimum door size: 7-1/2" x 17-1/2"
- To price the Chevron mullion door, choose door Design Charge and calculate the specie square foot Material Charge, then add the following: Chevron Mullion adder based on number of lites, the individual lite charges based on the framing bead, the odd mullion configuration charge and retainer moulding charge.

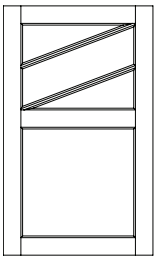

Chevron 3 Lite Up

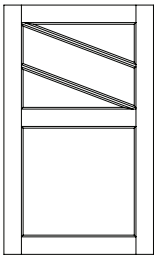

Chevron 3 Lite Down

Chevron Mullion and Panel Combination

- The Chevron Mullion and Panel Combination features a two-panel door with diagonal mullion pattern in the top opening and a plywood, MDF, solid wood panel, or frame only in the bottom opening.
- Top opening size and number of lites must be specified when ordering.
- All 3/4" framing beads available. 1" framing beads available in F-007, F-1223, Ogee, Regular and Square.
- Matching mullion profiles available in F-007, F-1223, Ogee, Regular and Square. Elite and F-877 receive Regular bead mullion profiles.
- Odd mullion upcharge applies, regardless of number of profile or number of lites.
- Clear plastic retainer moulding standard unless otherwise specified. Wood retainer moulding or no retainer moulding options available.
- Mullion portion of Chevron and Panel Combination door receives the price adder based on the number of lites selected.
- To price the Chevron and Panel Combination door, choose door Design Charge (2-Panel) plus and calculate the specie square foot Material Charge, then add the following: Chevron Mullion adder based on number of lites, the individual lite charges based on the framing bead, the odd mullion configuration charge and retainer moulding charge.

***Caution**: Long, continuous mullion strips are highly susceptible to bowing and warping. This condition is typically the result of moisture absorption and expansion of door framing which applies pressure against the mullion strips. Conestoga does not warranty mullions that bow due to exposure to high humidity conditions or environments. A clear adhesive applied between the back of the mullion strip and glass panel may help reduce the amount of noticeable mullion movement. Standard lite mullions are recommended for use in high moisture conditions.

Mullion Doors (continued)

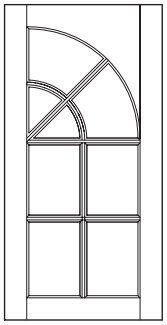

QC1000

QC1000 / QC2000 Mullions

- Design Charge .
- Quarter Circle mullion doors are typically ordered in sets. When left and right doors are paired on a cabinet, display case or piece of furniture, they create a highly attractive design element.
- 3/4" F-007, F-1223, Regular, Ogee and Square framing beads available.
- Matching mullion profiles available in F-007, F-1223, Regular, Ogee and Square.
- Minimum door width is 10" x 17" with 2-1/4" wide framing on face and 1-13/16" framing on back. Door height must always exceed the door width by at least 2-1/2".
- Specify the number of lites desired when ordering. The visual appeal of the QC mullion doors is greatly impacted by the number of lites.
  - For the QC1000 mullion design, consult the chart on page 6.12 to see the recommended number of lites per door size.
  - For the QC2000 mullion design, consult the chart on page 6.13 to see the recommended number of lites per door size.
- Clear plastic retainer moulding standard unless otherwise specified. Wood retainer moulding and no retainer moulding options available.
- True divided lite option available. Upcharges apply.

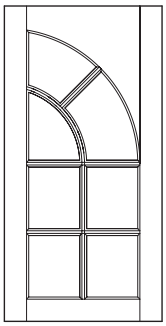

QC2000

QC3000 Mullion

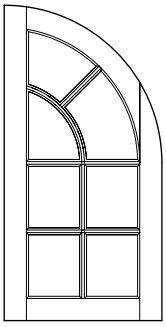

QC3000

- Design Charge.
- Quarter Circle mullion doors are typically ordered in sets. When left and right doors are paired on a cabinet, display case or piece of furniture, they create a highly attractive design element.
- 3/4" F-007, F-1223, Regular, Ogee and Square framing beads available.
- Matching mullion profiles available in F-007, F-1223, Regular, Ogee and Square.
- Minimum door width is 10" x 17" with 2-1/4" wide framing on face and 1-13/16" framing on back. Door height must exceed the door width by at least 2-1/2".
- Specify the number of lites desired when ordering. The visual appeal of the QC mullion doors is greatly impacted by the number of lites.
  - For the QC3000 mullion design, consult the chart on page 6.13 to see the recommended number of lites per door size.
- Clear plastic retainer moulding standard, no options.

CONESTOGA™ WOOD SPECIALTIES

Quarter Circle 1000 Radius Mullion Recommendations

Use this chart to determine the ideal number of mullion lites for a given Quarter Circle 1000 door size or to determine availability for a given door size.

Door/Mullion Lite Availability and Recommendations																	
Height	10	11	12	13	14	15	16	17	18	19	20	21	22	23	24	25	26
12	NA	NA	NA	NA	NA	NA	NA	NA	NA	NA	NA	NA	NA	NA	NA	NA	NA
13	NA	NA	NA	NA	NA	NA	NA	NA	NA	NA	NA	NA	NA	NA	NA	NA	NA
14	NA	NA	NA	NA	NA	NA	NA	NA	NA	NA	NA	NA	NA	NA	NA	NA	NA
15	NA	NA	NA	NA	NA	NA	NA	NA	NA	NA	NA	NA	NA	NA	NA	NA	NA
16	NR	NA	NA	NA	NA	NA	NA	NA	NA	NA	NA	NA	NA	NA	NA	NA	NA
17	6	NR	NA	NA	NA	NA	NA	NA	NA	NA	NA	NA	NA	NA	NA	NA	NA
18	6	NR	NR	NA	NA	NA	NA	NA	NA	NA	NA	NA	NA	NA	NA	NA	NA
19	6	6	NR	NR	NA	NA	NA	NA	NA	NA	NA	NA	NA	NA	NA	NA	NA
20	6	6	6	NR	NR	NA	NA	NA	NA	NA	NA	NA	NA	NA	NA	NA	NA
21	8	6	6	NR	NR	NR	NA	NA	NA	NA	NA	NA	NA	NA	NA	NA	NA
22	8	6	6	6	NR	NR	NR	NA	NA	NA	NA	NA	NA	NA	NA	NA	NA
23	8	8	6	6	6	NR	NR	NR	NA	NA	NA	NA	NA	NA	NA	NA	NA
24	8	8	6	6	6	NR	NR	NR	NR	NA	NA	NA	NA	NA	NA	NA	NA
25	8	8	8	6	6	6	NR	NR	NR	NR	NA	NA	NA	NA	NA	NA	NA
26	8	8	8	6	6	6	6	NR	NR	NR	NR	NA	NA	NA	NA	NA	NA
27	8	8	8	8	6	6	6	NR	NR	NR	NR	NR	NA	NA	NA	NA	NA
28	8	8	8	8	6	6	6	6	NR	NR	NR	NR	NR	NA	NA	NA	NA
29	10	8	8	8	8	6	6	6	6	NR	NR	NR	NR	NR	NA	NA	NA
30	10	8	8	8	8	6	6	6	6	NR	NR	NR	NR	NR	NR	NA	NA
31	10	8	8	8	8	8	6	6	6	6	NR	NR	NR	NR	NR	NR	NA
32	10	10	8	8	8	8	6	6	6	6	6	NR	NR	NR	NR	NR	NR
33	10	10	8	8	8	8	8	6	6	6	6	NR	NR	NR	NR	NR	NR
34	10	10	8	8	8	8	8	6	6	6	6	6	NR	NR	NR	NR	NR
35	10	10	10	8	8	8	8	8	6	6	6	6	6	NR	NR	NR	NR
36	12	10	10	8	8	8	8	8	6	6	6	6	6	NR	NR	NR	NR
37	12	10	10	8	8	8	8	8	8	6	6	6	6	6	NR	NR	NR
38	12	10	10	10	8	8	8	8	8	6	6	6	6	6	6	NR	NR
39	12	10	10	10	8	8	8	8	8	8	6	6	6	6	6	NR	NR
40	12	12	10	10	8	8	8	8	8	8	6	6	6	6	6	6	NR
41	12	12	10	10	10	8	8	8	8	8	8	6	6	6	6	6	6
42	12	12	10	10	10	8	8	8	8	8	8	6	6	6	6	6	6
43	14	12	10	10	10	8	8	8	8	8	8	8	6	6	6	6	6
44	14	12	12	10	10	10	8	8	8	8	8	8	6	6	6	6	6
45	14	12	12	10	10	10	8	8	8	8	8	8	8	6	6	6	6
46	14	12	12	10	10	10	8	8	8	8	8	8	8	6	6	6	6
47	14	12	12	10	10	10	10	8	8	8	8	8	8	8	6	6	6
48	14	12	12	10	10	10	10	8	8	8	8	8	8	8	6	6	6

NA = Not Available NR = Not Reccomended

Sizes exceeding 48" in height must specify number of lites.

Quarter Circle 2000 and 3000 Radius Mullion Recommendations

Use this chart to determine the ideal number of mullion lites for a given Quarter Circle 2000 and 3000 door size or to determine availability for a given door size.

Door/Mullion Lite Availability and Recommendations																	
Height	**10**	**11**	**12**	**13**	**14**	**15**	**16**	**17**	**18**	**19**	**20**	**21**	**22**	**23**	**24**	**25**	**26**
12	NA	NA	NA	NA	NA	NA	NA	NA	NA	NA	NA	NA	NA	NA	NA	NA	NA
13	NA	NA	NA	NA	NA	NA	NA	NA	NA	NA	NA	NA	NA	NA	NA	NA	NA
14	NA	NA	NA	NA	NA	NA	NA	NA	NA	NA	NA	NA	NA	NA	NA	NA	NA
15	NA	NA	NA	NA	NA	NA	NA	NA	NA	NA	NA	NA	NA	NA	NA	NA	NA
16	NR	NA	NA	NA	NA	NA	NA	NA	NA	NA	NA	NA	NA	NA	NA	NA	NA
17	5	NR	NA	NA	NA	NA	NA	NA	NA	NA	NA	NA	NA	NA	NA	NA	NA
18	5	NR	NR	NA	NA	NA	NA	NA	NA	NA	NA	NA	NA	NA	NA	NA	NA
19	5	5	NR	NR	NA	NA	NA	NA	NA	NA	NA	NA	NA	NA	NA	NA	NA
20	5	5	5	NR	NR	NA	NA	NA	NA	NA	NA	NA	NA	NA	NA	NA	NA
21	7	5	5	NR	NR	NR	NA	NA	NA	NA	NA	NA	NA	NA	NA	NA	NA
22	7	5	5	5	NR	NR	NR	NA	NA	NA	NA	NA	NA	NA	NA	NA	NA
23	7	7	5	5	5	NR	NR	NR	NA	NA	NA	NA	NA	NA	NA	NA	NA
24	7	7	5	5	5	NR	NR	NR	NR	NA	NA	NA	NA	NA	NA	NA	NA
25	7	7	7	5	5	5	NR	NR	NR	NR	NA	NA	NA	NA	NA	NA	NA
26	7	7	7	5	5	5	5	NR	NR	NR	NR	NA	NA	NA	NA	NA	NA
27	7	7	7	7	5	5	5	NR	NR	NR	NR	NR	NA	NA	NA	NA	NA
28	7	7	7	7	5	5	5	5	NR	NR	NR	NR	NR	NA	NA	NA	NA
29	9	7	7	7	7	5	5	5	5	NR	NR	NR	NR	NR	NA	NA	NA
30	9	7	7	7	7	5	5	5	5	NR	NR	NR	NR	NR	NR	NA	NA
31	9	7	7	7	7	7	5	5	5	5	NR	NR	NR	NR	NR	NR	NA
32	9	9	7	7	7	7	5	5	5	5	5	NR	NR	NR	NR	NR	NR
33	9	9	7	7	7	7	7	5	5	5	5	NR	NR	NR	NR	NR	NR
34	9	9	7	7	7	7	7	5	5	5	5	5	NR	NR	NR	NR	NR
35	9	9	9	7	7	7	7	7	5	5	5	5	5	NR	NR	NR	NR
36	11	9	9	7	7	7	7	7	5	5	5	5	5	NR	NR	NR	NR
37	11	9	9	7	7	7	7	7	7	5	5	5	5	5	NR	NR	NR
38	11	9	9	9	7	7	7	7	7	5	5	5	5	5	5	NR	NR
39	11	9	9	9	7	7	7	7	7	7	5	5	5	5	5	NR	NR
40	11	11	9	9	7	7	7	7	7	7	5	5	5	5	5	5	NR
41	11	11	9	9	9	7	7	7	7	7	7	5	5	5	5	5	5
42	11	11	9	9	9	7	7	7	7	7	7	5	5	5	5	5	5
43	13	11	9	9	9	7	7	7	7	7	7	7	5	5	5	5	5
44	13	11	11	9	9	9	7	7	7	7	7	7	5	5	5	5	5
45	13	11	11	9	9	9	7	7	7	7	7	7	7	5	5	5	5
46	13	11	11	9	9	9	7	7	7	7	7	7	7	5	5	5	5
47	13	11	11	9	9	9	9	7	7	7	7	7	7	7	5	5	5
48	13	11	11	9	9	9	9	7	7	7	7	7	7	7	5	5	5

NA = Not Available NR = Not Reccomended

Sizes exceeding 48" in height must specify number of lites.

CRP-10 and TW-10 Pilaster Doors

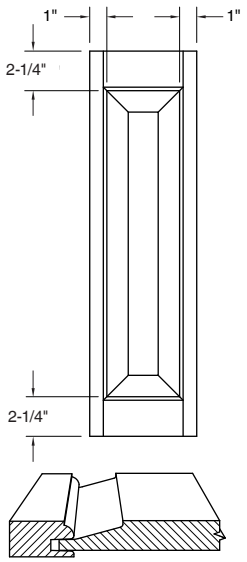

CRP-10 Pilaster Door

5-3/4" x 7-3/8"
Slant raise shown

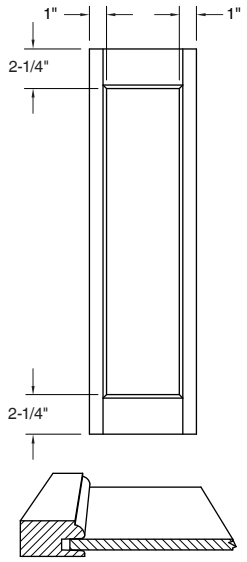

TW-10 Pilaster Door

3-3/4" x 5"
1/4" Veneered panel

Offering And Availability

All Conestoga products are available in a wide variety of specifications to satisfy your custom needs. The information below indicates any exceptions or limitations pertaining to the designs shown above. For a detailed listing of a particular product specification, refer to the page indicated.

Species	
Material Pricing Guide	CRP-10 – all 3/4" species available. TW-10 – all 3/4" species available except Rustic Knotty and Soft Maple.
Edge Profiles	
pg 7.1	Design specific, no options available (Machine edge only).
Framing Beads	
pg 7.2	All 3/4" profiles available.
Panel Raises	
pg 7.2A	CRP-10 – all 3/4" profiles available. TW-10 – 1/4" panel only.
Options	
pgs 7.3-7.15	Available with pegs, cut-downs, distressing, cross grain sanding, antiquing, non-standard width framing, putty pin holes, weathered grain, back-routed hand pull and G-012, G-015 and G-056 panel grooving.

All plywood panel designs use a veneered, composite core panel. All plywood panels except Red and White Birch and Quarter Sawn White Oak and Rift Cut Red and White Oak use a plain sliced or half round face and plain sliced or rotary back veneer. Red and White Birch use a rotary face and back. Quarter Sawn White Oak uses a quarter sawn face and plain sliced back. Rift Cut Red and White Oak use a rift cut face and plain sliced back. Vertical grain direction standard unless otherwise noted; horizontal grain available upon request. Minimums listed are based on panel raise shown and will vary by raise; see Offering and Availability for additional options. Framing width listed is determined by measuring across the back of the framing unless otherwise noted.

CRP-10 and TW-10 Pilaster Posts

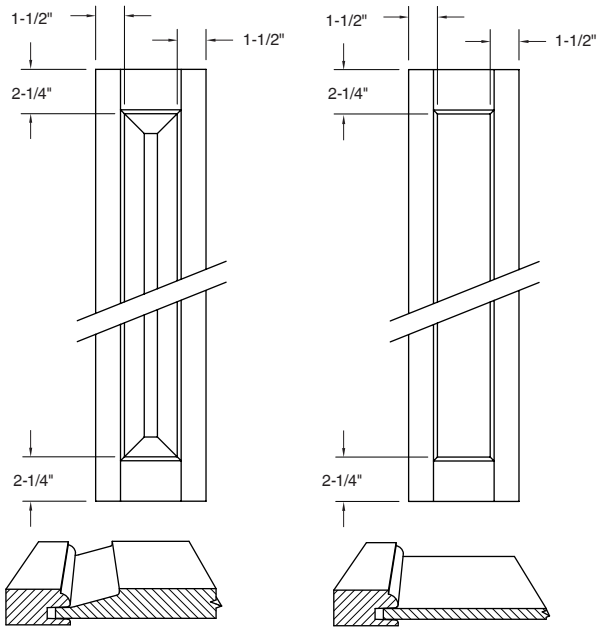

CRP-10 Pilaster Posts

5-3/4" x 7-3/8"

Slant raise shown

TW-10 Pilaster Posts

4-3/4" x 5"

1/4" Veneered panel

Minimums listed are based on panel raise shown and will vary by raise.

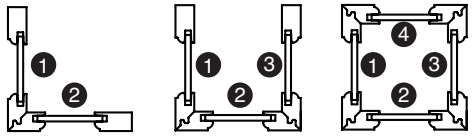

2-sided 3-sided 4-sided

(TW-10 shown)

- Standard framing widths: 1-1/2" stiles, 2-1/4" rails and 2-1/2" middle rails.
- Posts cannot exceed 12" x 96".
- Standard lead-time 10 days; add 5-6 days for finishing.
- 2-sided and 3-sided pilaster posts are available assembled only.
- Loose side option available only with 4-sided Pilaster Post; no additional charge. Post will be constructed as an assembled 3-sided post with the fourth side held in place utilizing miter-lock assembly joint without glue. The non-glued side can be easily removed, then reinserted with glue at the jobsite.

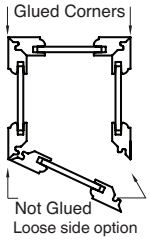

- During the finishing process it is possible that some finish materials may get on exposed edges. This finishing material should be removed before glue is applied to allow for a proper glue bond.
- CRP-10 and TW-10 Pilaster Posts have the option to receive a slab on any side. When ordering refer to drawing (left) and specify side(s) receiving slab.
- 4-sided posts with slab will not be warranted for open joints or a crack in slab due to expansion and contraction of the post itself.

Pilaster Post Pricing		
	CRP-10	TW-10
2-sided		
3-sided		
4-sided		

*The Design Charges above include the assembly charge of per side; posts over 48" high will receive an additional assembly charge per post.

Offering And Availability	
Species	
Material Pricing Guide	CRP-10 – all 3/4" species available. TW-10 – all 3/4" species available except Rustic Knotty and Soft Maple.
Edge Profiles	
pg 7.1	Design specific, no options available.
Framing Beads	
pgs 7.2	All 3/4" profiles available.
Panel Raises	
pgs 7.2A	CRP-10 – all 3/4" profiles available. TW-10 – 1/4" panel only.
Options	
pg 7.3-7.15	Available with pegs, distressing, cross grain sanding, antiquing, non-standard width framing and panel grooves.

Plywood Pilaster Posts

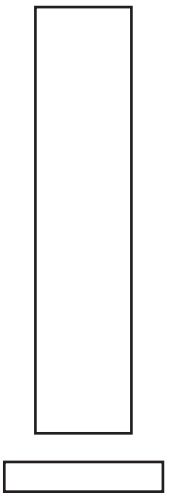

Plywood Pilaster Posts

3" x 6"
3/4" Veneered panel

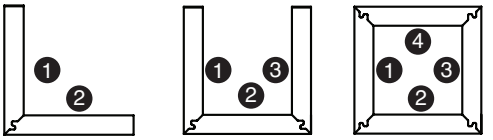

2-sided 3-sided 4-sided

(TW-10 shown)

- Posts cannot exceed 12" x 96".
- Standard lead-time 10 days; add 5-6 days for finishing.
- 2-sided and 3-sided pilaster posts are available assembled only.
- Loose side option available only with 4-sided Pilaster Post; no additional charge. Post will be constructed as an assembled 3-sided post with the fourth side held in place utilizing miter-lock assembly joint without glue. The non-glued side can be easily removed, then reinserted with glue at the jobsite.
- During the finishing process it is possible that some finish materials may get on exposed edges. This finishing material should be removed before glue is applied to allow for a proper glue bond.

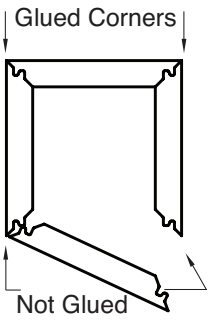

Plywood Post Pricing	
	Design Charge
2-sided	
3-sided	
4-sided	

*The Design Charges above include the assembly charge of per side; posts over 48" high will receive an additional assembly charge per post.

Material Charges (1 sq. ft. min.)	
Specie	**Sq. Ft. Charge**
Cherry	
Maple, Hard	
Oak, Red, Rift Cut	
Oak, White, Rift Cut	
Walnut	

Offering And Availability	
Species	
Material Pricing Guide	Species - 3/4" Cherry, Hard Maple, Rift Cut Red Oak, Rift Cut White Oak and Walnut - See chart above for pricing.
Edge Profiles	
pg 7.1	Design specific, no options available.
Options	
pg 7.3-7.15	Available with sample ID label and weather grain only.

Reeded Panels

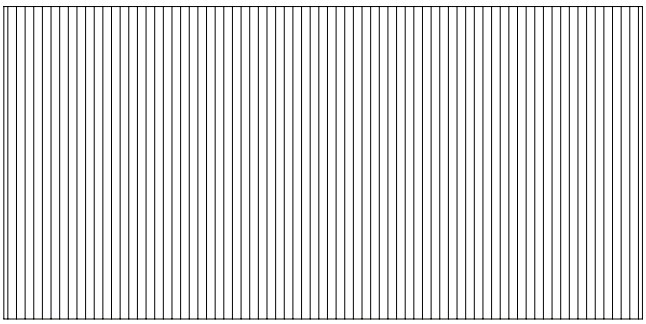

Min. 10" x 10"
Max. 48" x 96"
Vertical grain only
G-239 groove
5/16" reed width

Reeded Panel Only

- Material Charges Category A – 1-Piece MDF. Material Charge Category B – all 3/4" species available except Rustic Knotty, Cypress, Teak and Thermally Treated Poplar.
- Species: MDF – available in 3/8", 5/8" and 3/4" only. Solid wood panels – available in 5/8" and 3/4" only.
- Edge Profiles: Machine Edge only.
- Options: Back routed hand-pull and concealed hinge boring available on 3/4" only. Sample ID label available on all thicknesses. Optional batten available to provide additional support.

  NOTE: Available with Wiping Stains, primers, Colourtones and Prism Paints only. Glazing, Pinstriping, Truetones and Distressing are not available.

Batten Option Price Chart

# Of Battens	Panel Height	Panel Width	
		6"-24"	24-1/16" – 48"
1	Up to 12-9/16"		
2	12-5/8" – 48"		
3	49-1/16" +		

Flexible Reeded Tambour

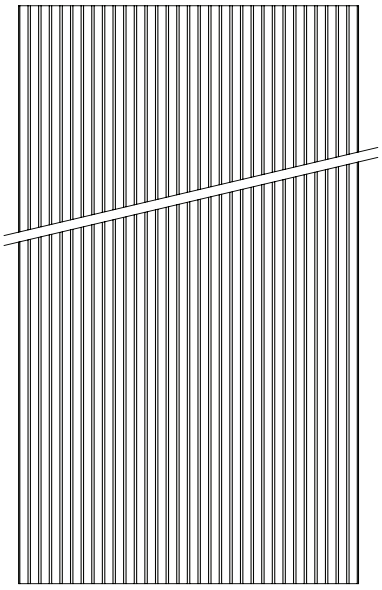

Vertical grain only
5/16" reed width
3/4" Tambour width

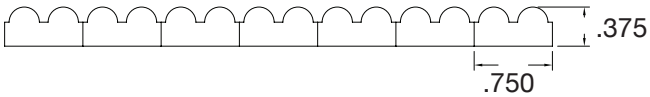

- 5/16" bead, 3/8" overall thickness.
- Species: Cherry, Hard Maple, Red Oak, Walnut, White Oak.
- Available unfinished or with Wiping Stain finishes only.
  - Glazing, Pinstriping, Truetones, primers, Colourtones, Prism Paints and distressing not available.
- 10 Day Lead-time.

Flexible Reeded Tambour Price Chart

Specie	Size	List Price	Size	List Price
Cherry	12" x 48"		24" x 48"	
Maple, Hard	12" x 48"		24" x 48"	
Oak, Red	12" x 48"		24" x 48"	
Oak, White	12" x 48"		24" x 48"	
Walnut	12" x 48"		24" x 48"	

Soho Black MDF Core Shiplap Panels

The Soho Shiplap Panel program is configured to allow customers to cover wide areas by combining multiple panels without disrupting the standard grooving pattern or spacing. The combination of three panel types allows customers to achieve a continuous, balanced appearance across wide width areas.

- Soho panels are constructed using 3/4” thick black MDF core with a choice of four veneer species on the face and back.
- The Soho's G-259 panel groove is 1/4” wide and 5/32” deep, spaced 1-1/2” from the center of one groove to the center of the next.
- Using shiplap joints, the inside edges of Panels A and C combine with Panel B to provide consistent groove spacing across the span of the surface area. The outer edge profiles of Panel A and Panel C receive a Machine Edge and are intended to be the beginning and termination points of the overall combined panels.
  - Panel A – as the starting point of the Soho multi-panel configuration, this panel can be ordered from widths ranging from 5” to 22-1/4”. The grooving process begins at the side of the panel with the shiplap edge profile and proceeds across the panel with the final groove being no closer than 1/2” to the opposite edge. Panel height availability ranges from 5” to 95-1/2”.
  - Panel B – with a fixed width of 22-1/2”, the panel is variable in height from 5” to 95-1/2”. Both vertical panel edges contain a shiplap edge profile, allowing multiple B panels to be placed next to each other to create a seamless grooved appearance and achieve a nearly limitless width.
  - Panel C – as the end point of the Soho multi-panel configuration, this panel can be ordered from widths ranging from 5-1/4” to 22-1/2”. The grooving process begins at the side of the panel with the shiplap edge profile and proceeds across the panel with the final groove being no closer than 1/2” to the opposite edge. Panel height availability ranges from 5” to 95-1/2”.
- Soho Shiplap Panels are available only Unfinished or with Natural finish, wiping stains, and high complexity Truetone stains.

Soho Shiplap Panel Design Charge	
.18 – 6.99 sq ft	
7.00 – 11.99 sq ft	
12.00+ sq ft	

Soho Shiplap Panel Material Charge	
Specie	**Sq. Ft. Price**
Cherry	
Maple, Hard	
Oak, White, Rift Cut	
Walnut	

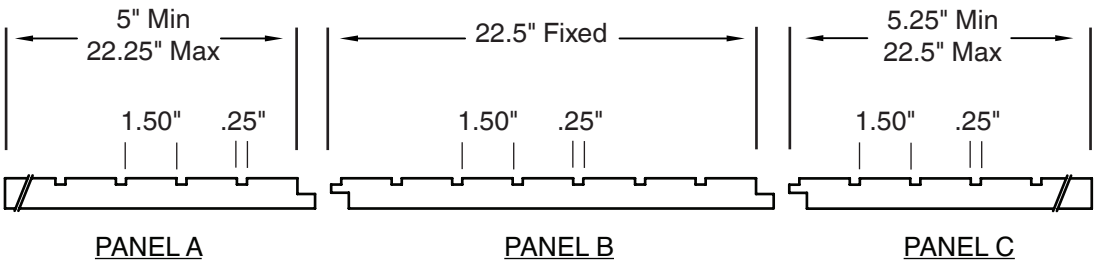

Note: If manually calculating panel sizes, due to the overlap of the shiplap edge profiles, use the face dimensions shown above.

Soho Black MDF Core Shiplap Panels (continued)

Soho Shiplap Width Calculator

Conestoga provides a downloadable Soho Shiplap Width Calculator tool located on the Customer Business Portal (CBP). On the CBP, go to Resources, then Downloads, then Supporting Product Information to find the Soho Shiplap Width Calculator. After downloading the Width Calculator, simply enter the width of the entire space where the panels will be installed. The Soho Shiplap Width Calculator will provide the quantity of the fixed width B Panels along with the widths of the individual A and C Panels. Since the joints between panels are hidden by the overlap, the finished appearance will resemble a large, single continuous panel with equal spacing of panel grooves.

Panel Width Calculator

Overall Width	Panel A Width	Required Number of Panel B at 22.5" Wide	Panel C Width
72"	21.625"	2	5.375"

Last Flat Panel A	Last Flat Panel C
.625"	.625"
Distance from last groove to edge of Panel A.	Distance from last groove to edge of Panel C.

- Each panel is manufactured to the nearest 1/16" increment, with a tolerance of +/- 1/32".
- Contact Customer Service if a width greater than 144" is needed.

Wood Accent Doors



Crescent

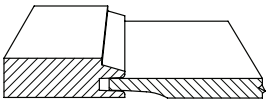

8-1/2" x 13"
Max. width - 26"
2-1/4" framing
3/8" Reverse G-cove shown

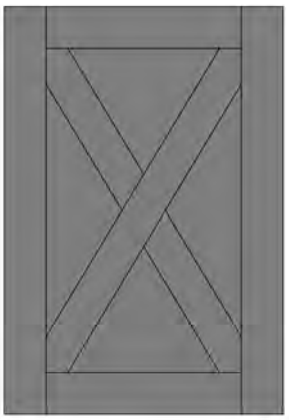

Crossbuck

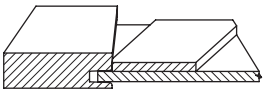

8" x 8"
2-1/4" framing
1/4" Veneer panel

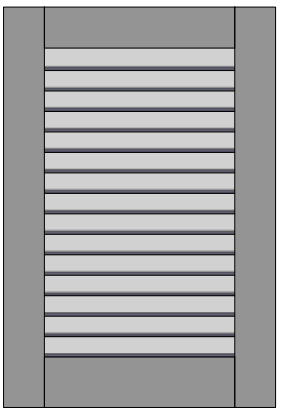

CWS-10302

section view from side

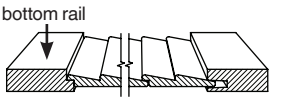

7-1/2" x 7-1/2"
Stiles - 2-1/4" framing
Rail width varies from 2" to 2-13/16" depending on height of door.

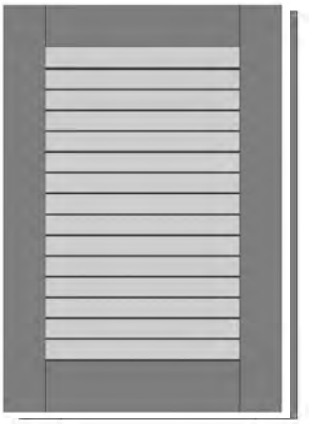

CWS-10446

section view from side

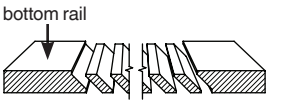

7-1/2" x 7-1/2"
Stiles - 2-1/4" framing
Top rail - 2-1/4" framing on face
Bottom rail - framing varies from 2-1/8" to 2-15/16" on face.



Half Circle

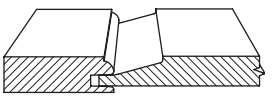

8-1/2" x 13"
Max. width - 26"
2-1/4" framing
Slant raise shown



HL/HR-20

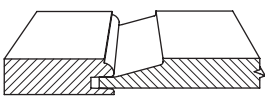

8-1/4" x 9"
2-1/4" framing
HL-20
(left side door shown)
Slant raise shown



Presidential Cathedral

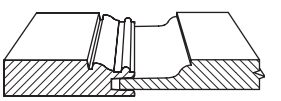

12" x 11-1/8"
2-3/4" framing
Presidential raise shown

Due to construction complexity, all multi-panel Presidential Cathedral doors include an additional charge of per middle rail and middle stile plus the per panel Design Charge. Minimums listed are based on panel raise shown and will vary by raise; see Offering and Availability for additional options. Framing width listed is determined by measuring across the back of the framing unless otherwise noted. Narrow point of arched and cathedral rails are equal to the width of the stiles.

Offering And Availability

All Conestoga products are available in a wide variety of specifications to satisfy your custom needs. The information below indicates any exceptions or limitations pertaining to the designs on the previous page. For a detailed listing of a particular product specification, refer to the page indicated.

Species	
Material Pricing Guide	Crescent and Crossbuck – all 3/4" species available except Rustic Knotty and Soft Maple. HL/HR-20 and Half Circle – all 3/4" species available, all 1" species available. CWS-10302 and CWS-10446 – all 3/4" species available except Quarter Sawn White Oak, Rift Cut White Oak and Rustic Knotty. Presidential Cathedral – all 3/4" species available. **Note:** When ordering the CWS-10302 with Colourtones, primers and Prism Paints, it is strongly recommended using Paint Grade Hard Maple Hybrid to avoid expansion and contraction related issues. Conestoga may reject environmental-related issues with primed or painted finishes if Paint Grade Hard Maple Hybrid is not selected.
Edge Profiles	
pg 7.1	HL/HR-20 and Half Circle – all 3/4" and 1" profiles available. Crescent, Crossbuck, CWS-10302, CWS-10446 and Presidential Cathedral – all 3/4" profiles available.
Framing Beads	
pg 7.2	HL/HR-20 and Half Circle – all 3/4" and 1" profiles available. Crescent, Crossbuck, CWS-10302, CWS-10446 and Presidential Cathedral – design specific, no options available.
Panel Raises	
pg 7.2A	Crescent – 3/4" profiles only. HL/HR-20 and Half Circle – all 3/4" and 1" profiles available. Crossbuck, CWS-10302 and CWS-10446 – design specific, no options available. Presidential Cathedral – all available except Louis XIII and P-602.
Options	
pgs 7.3-7.15	Crescent, HL/HR-20 and Half Circle – all options available. Crossbuck, CWS-10302, CWS-10446 and Presidential Cathedral – all options available except panel grooves. **Note:** CWS-10302 available with non-glazed Colourtones and Prism Paints, glazed and non-glazed wiping stains and Truetones. CWS-10446 available in glazed and non-glazed wiping stains only.
Mullions/Frame Only	
pgs 6.1-6.11	All designs - available in frame only and mullions except CWS-10302 and CWS-10446, which are only available in mullions. Crossbuck mullion – Square bead X-lite recommended. Half Circle, HL/HR-20 and Presidential Cathedral – all available, Presidential Cathedral incurs special lite charge. CWS-10302 and CWS-10446 – order as CRP-10 mullion with Square bead and Square bead mullions. **Note:** Crescent and Half Circle mullion placement varies according to door width. Specify configuration to ensure that mullions align when using Crescent and Half Circle doors with varying widths, or with other mullion designs.
Matching/Complementary Drawer Fronts	
pgs 4.14-4.15, 4.58-4.59	Crescent – Brivana drawer front recommended, Crossbuck – Slab drawer front recommended. CWS-10302, CWS-10446, HL/HR-20 and Half Circle – CRP-10 drawer front recommended. Presidential Cathedral – Presidential drawer front recommended.

Wood Accent Doors (continued)

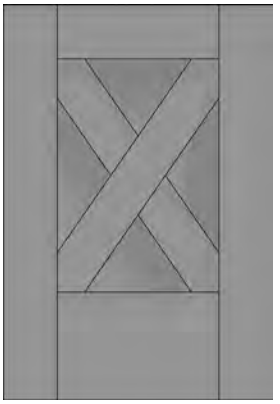

X Side Panel

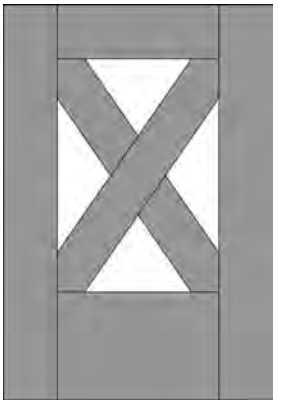

X Side Open

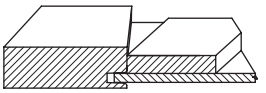

9-1/2" x 12-1/2"
3" stiles and top rail
6" bottom rail
1/4" Veneer panel

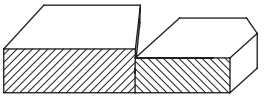

9-1/2" x 12-1/2"
3" stiles and top rail
6" bottom rail
Open frame

- 1" thick X Side decorative panels are available as both open frame and with a plywood center panel.
- The X Side overlay has numerous applications including: single panel wall and base end panel overlays, double panel upright refrigerator end panel overlays, and 2 and 3 panel side by side wainscot panel overlays.
- Stiles, top rail and diagonal cross members are 3" wide, bottom rail is 6" wide. All exterior framing can be modified in width, but diagonal cross members are fixed at 3" in width.

Offering And Availability

All Conestoga products are available in a wide variety of specifications to satisfy your custom needs. The information below indicates any exceptions or limitations pertaining to the designs above. For a detailed listing of a particular product specification, refer to the page indicated.

Species	
Material Pricing Guide	All designs – 1" Alder, Cherry, Hard Maple, Hickory, Paint Grade Hard Maple, Rift Cut White Oak, Walnut and White Oak only.
Edge Profiles	
pg 7.1	All designs – all 1" profiles available.
Framing Beads	
pg 7.2	All designs – design specific, no options available.
Panel Raises	
pg 7.2A	All designs – design specific, no options available.
Options	
pgs 7.3-7.15	All options available except panel grooves.
Mullions	
pgs 6.1-6.11	X Side Panel – frame only and mullions not available. X Side Open – mullions not available.
Matching/Complementary Drawer Fronts	
pgs 4.58-4.59	1" Slab drawer front recommended.

*Note: Material calculated on overall width and height.

Wire Grille Inserts

- An accent option for frame only and mullion doors, Conestoga's Wire Grille Inserts are woven, not welded, and crimped to achieve specific patterns and designs. Wire Grille Inserts feature an electroplated finish with a clear lacquer topcoat for durability.
- Wire Grille patterns are size specific – no options.
- Available in several attractive finishes. Finish availability varies.
- Due to the nature of the plating process, variations in color and finish may occur from factors such as chemical age, hand rubbing and lacquer application. For the best color consistency, we recommend ordering all grilles for a job at the same time. Exact matching between different orders cannot be guaranteed.
- Purchase as cut-to-size pieces, or as full sheets.
- Cut-to-size Wire Grille Inserts have pattern centered side to side, top to bottom.
- Wire Grille Inserts will be packaged separate from door.
- Wire Grilles can be held in place with standard clear plastic retainer moulding or wood retainer moulding. If 1/8" glass is used in conjunction with Wire Grille Insert use #52 moulding (requires trimming) or #907 moulding. Inserts and retainer mouldings must be inserted by the customer.
- Grilles will flex during shipping and handling, but can be gently pulled back to original dimensions.
- Lead-time for all Wire Grille Inserts is 12-19 business days.
- Expedite program not available.
- Exterior edges of Wire Grille Inserts are sharp. Caution should be used when opening package and handling grille inserts to avoid cuts and other injuries.
- Minimum charge of 2 sq. ft. applies to all 300 Series Wire Grilles, regardless of final cut size.

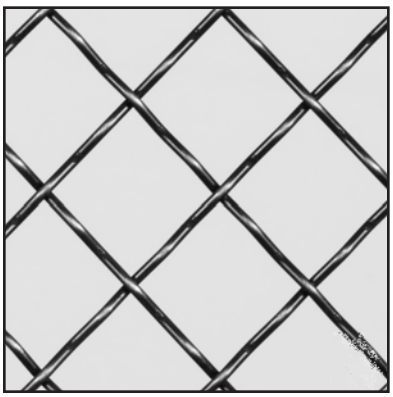

WG100 – Round Wire

- Double crimped, 1/16" round wire with 3/4" mesh openings.
- Finishes: Antique Brass, Oil-Rubbed Bronze and Satin Steel.
- Minimum size: 6" x 6".
- Maximum size: 20" x 48".

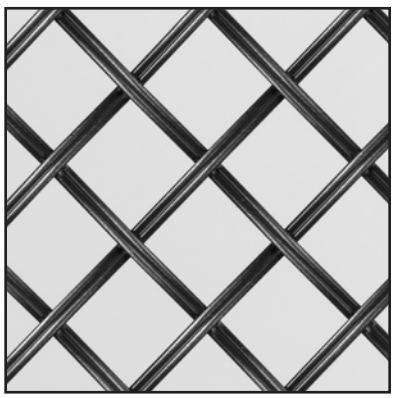

WG102 - Reeded Wire

- Single crimped, 1/16" x 1/8" reeded wire with 3/4" mesh openings.
- Finishes: Antique Brass, Oil-Rubbed Bronze and Satin Steel.
- Minimum size: 6" x 6".
- Maximum size: 20" x 48".

Please refer to pricing through Con-Nex, our online ordering program

Wire Grille Inserts (continued)

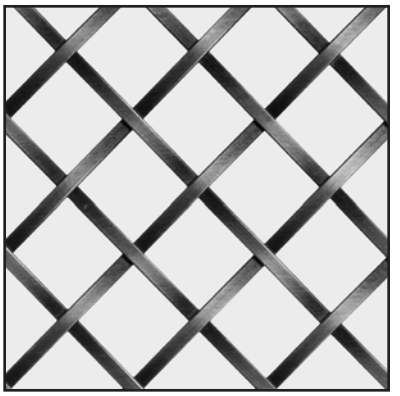

WG103 – Flat Wire

- Single crimped, 1/16" x 1/8" flat wire with 3/4" mesh openings.
- Finishes: Antique Brass, Oil-Rubbed Bronze and Satin Steel.
- Minimum size: 6" x 6".
- Maximum size: 20" x 48".

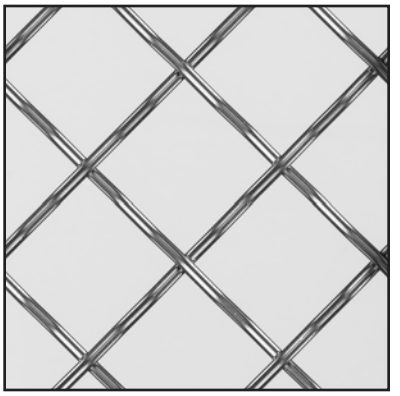

WG104 – Reeded Wire

- Double crimped, 1/16" x 1/8" reeded wire with 1-1/4" mesh openings.
- Finishes: Antique Brass, Oil-Rubbed Bronze and Satin Steel.
- Minimum size: 6" x 6".
- Maximum size: 20" x 48".

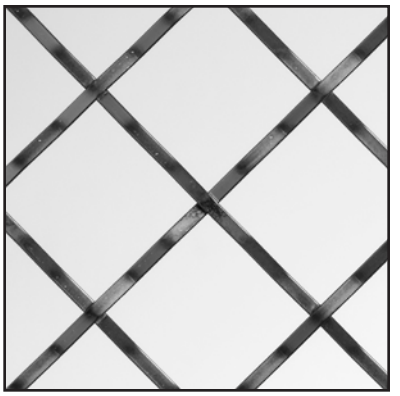

WG105 – Flat Wire

- Double crimped, 1/16" x 1/8" flat wire with 1-1/4" mesh openings.
- Finishes: Antique Brass, Oil-Rubbed Bronze and Satin Steel.
- Minimum size: 6" x 6".
- Maximum size: 20" x 48".

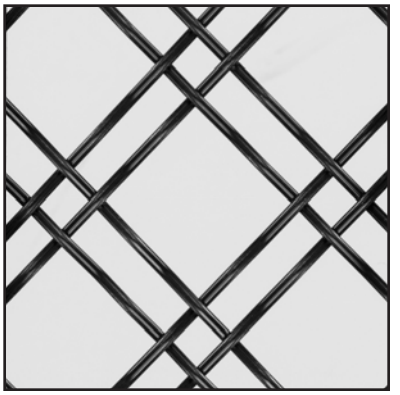

WG106 – Reeded Wire

- Double crimped, 1/16" x 1/8" reeded wire with a combination of 1/2" and 1-1/2" mesh openings.
- Finishes: Antique Brass, Oil-Rubbed Bronze and Satin Steel.
- Minimum size: 6" x 6".
- Maximum size: 20" x 48".

Please refer to pricing through Con-Nex, our online ordering program

Wire Grille Inserts (continued)

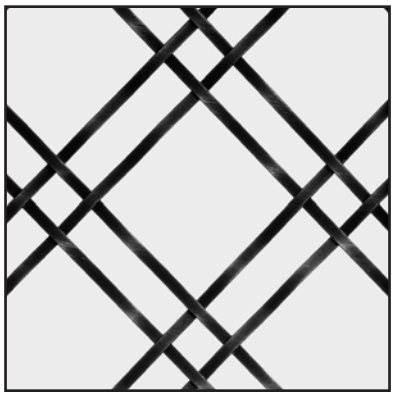

WG107 – Flat Wire

- Double crimped, 1/16" x 1/8" flat wire with a combination of 1/2" and 1-1/2" mesh openings.
- Finishes: Antique Brass, Oil-Rubbed Bronze and Satin Steel.
- Minimum size: 6" x 6".
- Maximum size: 20" x 48".

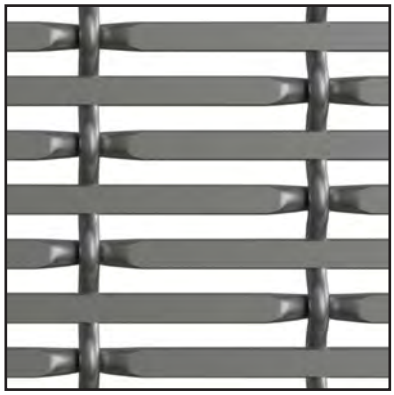

WG201 – Straight Weave

- Straight 1.25" flat weave with a combination of 11/16" and 1/8" opening.
- Finishes: Flat Black, Natural Aluminum and Warm Bronze.
- Minimum size: 6" x 6".
- Maximum size: 36" x 48".

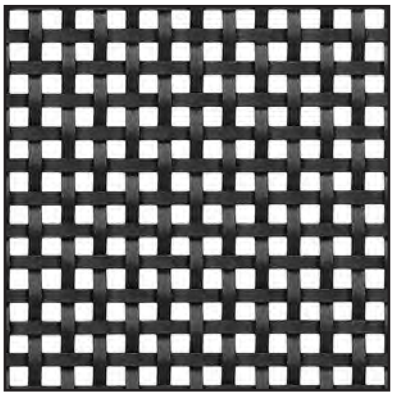

WG202 – Flat Square

- Flat single square, 1/16" x 1/8" wire with a 3/16" mesh opening.
- Finishes: Aged Brass, Flat Black, Satin Brass and Satin Nickel.
- Minimum size: 6" x 6".
- Maximum size: 36" x 48".

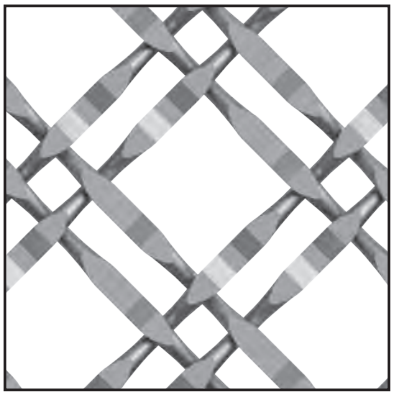

WG203 – Crimped Double Diamond

- Flat crimped double diamond, 1/16" x 1/8" flat weave with a combination of 1/4" and 5/8" openings.
- Finishes: Aged Brass, Satin Brass and Satin Nickel.
- Minimum size: 6" x 6".
- Maximum size: 36" x 48".

Please refer to pricing through Con-Nex, our online ordering program

Wire Grille Inserts (continued)



WG204 – Flat Single Diamond

- Flat wired diamond, 1/16" x 1/8" with a 3/8" mesh opening.
- Finishes: Aged Brass, Flat Black, Satin Brass and Satin Nickel.
- Minimum size: 6" x 6".
- Maximum size: 36" x 48".

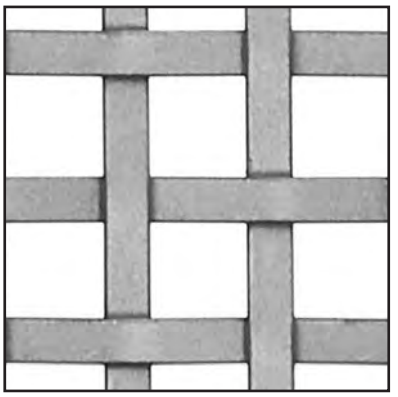

WG204S – Flat Single Square

- Flat wired square, 1/16" x 1/8" with a 3/8" mesh opening.
- Finishes: Aged Brass, Flat Black, Satin Brass and Satin Nickel.
- Minimum size: 6" x 6".
- Maximum size: 24" x 36".



WG205 – Multi-Crimp Single Diamond

- Crimped diamond, 1/16" x 1/8" flat wire with a 3/4" mesh opening.
- Finishes: Aged Brass, Flat Black, Satin Brass and Satin Nickel.
- Minimum size: 6" x 6".
- Maximum size: 36" x 48".



WG205S – Multi-Crimp Single Square

- Crimped square, 1/16" x 1/8" flat wire with a 3/4" opening.
- Finishes: Aged Brass, Flat Black, Satin Brass and Satin Nickel.
- Minimum size: 6" x 6".
- Maximum size: 24" x 36".

Woven Mesh Inserts

- An accent option for frame only and mullion doors; Conestoga's Mesh Inserts are tightly woven, not welded, to achieve a look perfectly made for layering. To maintain sturdiness and integrity woven mesh should be installed between glass, or behind a decorative grille.
- Mesh patterns are size specific – no options.
- Available in select finishes. See individual mesh information.
- Purchase as cut-to-size pieces, or as full sheets.
- Inserts are packaged seperate from door.
- Inserts can be held in place with standard clear plastic retainer moulding when paired with wire grilles. Use #52 moulding (requires trimming) or #907 moulding when paired with 1/8" glass. Inserts and Mouldings must be inserted by the customer.
- Mesh may flex during shipping and handling, but can be gently spread flat to original dimension.
- Lead-time for all Mesh Inserts is 12-19 business days.
- Expedite program not available.
- Exterior edges of Woven Mesh is sharp and fragile. Handle with care to avoid damage to product and injury.
- Due to the nature of the plating process, variations in color and finish may occur from factors such as chemical age, hand rubbing and lacquer application. For the best color consistency, we recommend ordering all Woven Mesh for a job at the same time. Exact matching between different orders cannot be guaranteed.
- Minimum charge of 2 sq. ft. applies to all Mesh smaller than 2 sq. ft., regardless of final cut size.

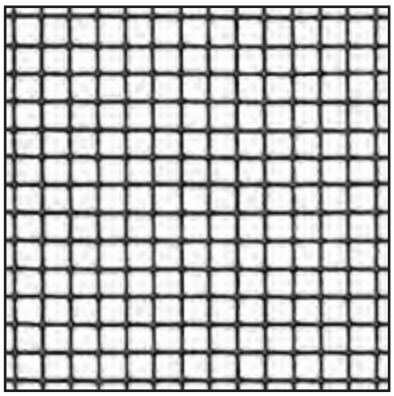

Mesh301 – Fine Woven Wire Mesh

- Fine Woven Wire Mesh is a tightly woven thin wire with evenly spaced square openings.
- Finishes: Flat Black, Satin Brass and Satin Nickel.
- Minimum size: 6" x 6".
- Maximum size: 20" x 48".

Wire Grille and Woven Mesh Inserts Sample Boards

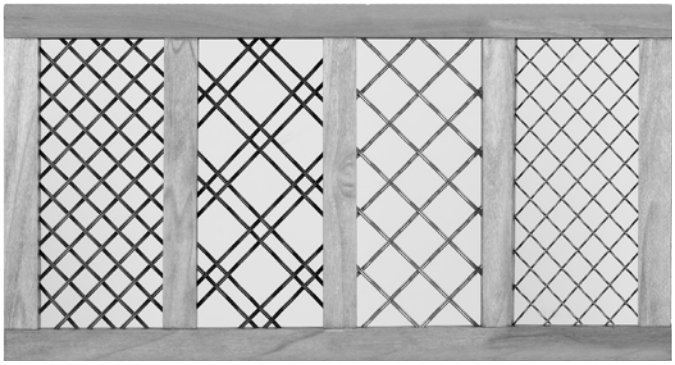

Wire Grille Display Unit 100 Series

- Features 7 Wire Grille patterns and 3 program finishes for the WG100 through WG107 series.
- Unit is dual sided 11" x 21".
- Maple framing is finished in a medium brown finish.
- Order using part #2601790A.
- Lead-time is 4 days.

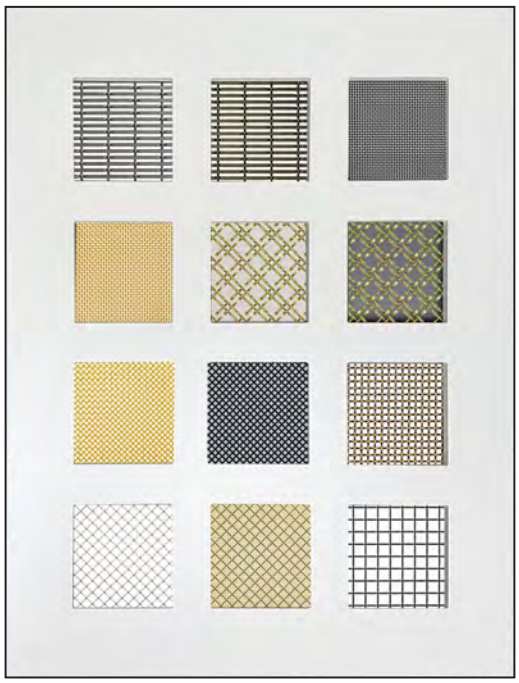

Woven Mesh and Grille Display Unit 200 and 300 Series

- Display unit features 7 Wire Grille patterns and 1 Woven Mesh pattern.
- The Woven Mesh combined with any Wire Grille pattern creates a layered effect.
- Most Wire Grille patterns are available in 4 program finishes; WG201 and WG203 are limited to 3 finishes.
- Woven Mesh patterns are available in 3 finishes.
- The Display Unit is single-sided, measuring 16-3/4” x 21-1/4”, and finished in our Frosty White Colourtone.
- The 200/300 Series Display Unit is net.
- Order using part #2601793A.
- Lead-time is 4 days.

Leather Panel Inserts

An accent option for frame only and mullion doors, Conestoga's Leather Panel Inserts are made using recycled leather veneer (RLV™), which is reprocessed leather remnants finished with a layer of resin, making RLV both durable and versatile.

- All Leather Panel Inserts are 4mm thick double-sided sustainable leather veneers. Leather veneers are laminated to both sides of a TSCA/CARB2 compliant composite.
- Available in seven attractive colors with a random "Buffalo" embossed pattern:

  Bright White, Coal, Cocoa, Gold Grey Metallic, Grey Umber, Maple, Paloma Grey.
- Square foot price: list per square foot for all colors.
- Can be ordered in combination with frame only doors and drawer fronts, mullion doors, as cut-to-size panels, or 48" x 96" full sheets.

  Note: Leather Panel Inserts can be ordered in combination with any frame only or mullion door design. CRP-10 and TW-10 frame only drawer fronts are also available with Leather Panel Inserts
- If ordering frame only doors and drawer fronts with Leather Panel Inserts, Conestoga will calculate the required panel sizes.
- Minimum panel size is 3" x 3"; maximum size is 48" x 96". A 1 square foot minimum charge applies, regardless of actual panel size.
- Leather Panel Inserts are packaged separately from doors and drawer fronts.
- Leather Panel Inserts can be installed using standard clear plastic retainer moulding. Panels and retainer mouldings must be inserted by the customer.
- Lead-time for all Leather Panel Inserts is 15 business days.
- Expedite program not available.

Leather Panel Insert Sample Kit

- Features 7 attractive double-sided 4mm Leather Panel Insert color samples, a single-sided round leather coaster and a small vial of recycled leather fibers to use in your selling process.
- The attractive glossy black display box ships in a protective outer carton to ensure the display box inside remains free from scuffs, scratches and dirt.
- The Leather Panel Insert Sample Kit measures 3" x 6-3/8" x 6-3/8". Actual samples are approximately 5" x 5", and are individually labeled.
- Net price is
- Order using part #2601791A.
- Lead-time: 3 days.



Wainscot Panels

Wainscot panels can be ordered to match most door styles that Conestoga offers. Each wainscot panel is custom made to meet your exact size, panel and framing specifications.

Wainscot panels are typically constructed with multiple panels and/or wide bottom rails. A wainscot product is defined as any door or panel that exceeds 36" in width and 36" in height, when the length or width exceeds 84", or that contains any framing (stile or rail) 6" in width or wider.

- When ordering wainscot products, specify all rail and stile widths, including center framing pieces. Framing width of the wainscot panel will match the standard framing width of the door design requested unless otherwise noted by customer.
- Dimensioned sketches are preferred with each order to ensure correct order entry.
- Wainscot panels over 119" in width or height, or wainscot products that require more than six panels, will be processed by Special Designs; upcharges apply.
- Bamboo cannot be ordered over 95-3/4" in length due to material availability.
- Stiles or rails over 2-1/4" in width may utilize framing material containing one or more glue joints. Number of glue joints is dependent on the overall width and length of the framing in question. See page 7.10 for framing width glue joint guidelines.
- Finished wainscot panels will have the face and exterior edges fully finished and topcoated. The back of the panel will receive only a clear coat of sealer or primer unless “Finished Back” Option is requested. See the Finishing Program Section for pricing of Finished Back Option.

Pricing

- Wainscot panel pricing is calculated using the door Design Charge multiplied by the number of panels specified, then add the Material Charge and any wide framing charges.
- If a wainscot panel exceeds 50" in width and 50" in height, a list upcharge will be incurred due to the manual sanding process and special handling.
- Wainscot panels with stiles 8-13/16" to 15" will automatically receive a mullion type spline as structural reinforcement. The spline charge is list per stile.
- Wainscot panels will receive an additional charge of net for oversize packaging if the panel exceeds 36" in width and 36" in height, or if any dimension exceeds 84".

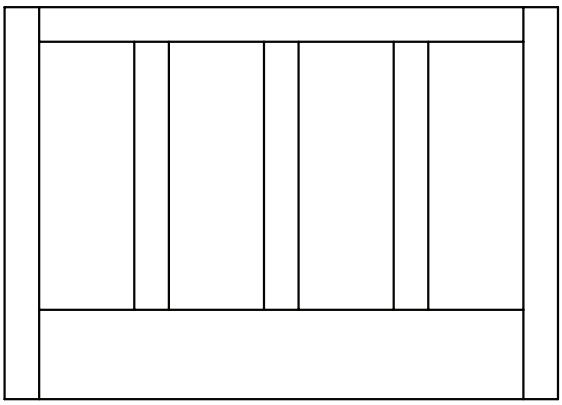

Four panel wainscot with wide bottom rail.

Metal Accent Option

Enhance your cabinetry with the clean, contemporary look of metal trim accents. Available in four trim profiles and five finish options, these accents can be paired with select door and drawer front designs.

- Minimum single opening may not be less than 2-1/2" in width or height.
- Maximum single opening may not exceed 68" in width or height.
- Metal Accent doors and drawer fronts utilize a plywood, MDF or MDF hybrid recessed panel.
- Solid wood panels not eligible.
- Unfinished and primer-only doors, drawer fronts and frame only doors ordered with metal accents are pre-fit with double-sided tape pre-applied; the accent pieces will be temporarily secured to the product they are customized for.
- Finished doors and drawer fronts with metal accents will be installed onto the center panel by Conestoga using an industrial strength double-sided tape.
- All Allure DLV and Intrigue, Strata and Vogue TTS 5-Piece designs are considered Finished products and will ship with Metal Accents installed.
- Add 3 days to standard lead times.

Material Charge		
	Per Linear Inch	72" Length
1/4" x 1/4" Bar		
1/4" x 3/4" Bar		
1/16" x 3/4" Strapping		
1/4" x 7/16" Angled Bar		

Design Charge	
Unfinished, Primed	
Finished	

Metal Accent Profiles

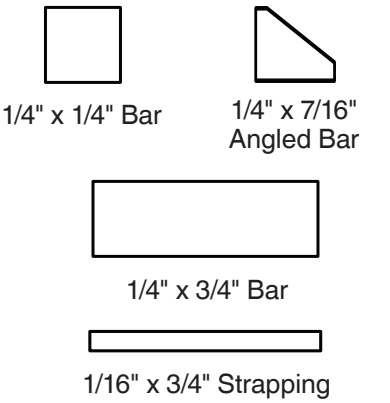

72" Metal Accent Material (Double-Sided Tape Applied)				
	1/4" x 1/4" Bar	1/4" x 3/4" Bar	1/16" x 3/4" Strapping	1/4" x 7/16" Angled Bar
Part Numbers				
Brushed Aluminum	2626513A	2626518A	2626523A	2626528A
Satin Brass	2626514A	2626519A	2626524A	2626529A
Flat Black	2626515A	2626520A	2626525A	2626530A
Titanium	2626516A	2626521A	2626526A	2626531A
Warm Bronze	2626517A	2626522A	2626527A	2626532A
Standard lead-time 10 days.				
Accent Finishes				
Brushed Aluminum, Flat Black, Satin Brass, Titanium, Warm Bronze - available in all metal accents.				

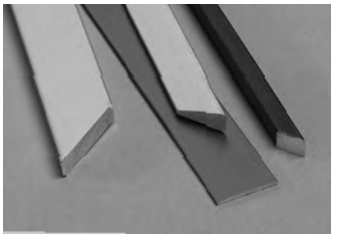

Door/Drawer Design Availability	
Wood	**Alternative Material**
TW-10, TW-1038, TW-10 Miter, Franklin, and CRP-10 - all profiles available with Square framing bead. Regular, Ogee, F-007, F-1223, and F-877 framing beads - available with 1/16" x 3/4" Strapping only. CRP-10751, CRP-10827, CRP-10946, TW-10751MT, Albany, Stockbridge, CRP10751MT, TW-10751MT, 10SQF2 - all accents available. Wakefield, SavannahPP, TW-10916, CRP-10191, Venus, FargoPP, OmahaPP, Juno, Amesbury, Cortland, Madison, Venus78, Crawford, CRP-10382MT, CRP-10605MT, Savannah, SavannahMT, Vulcan, AmesburyPP, MadisonPP - available with 1/16" x 3/4" Strapping only.	Boca 225, Boca 300, Cabo 225, Daytona 225, Delray 225, Delray 300, Melbourne 225, Montego 225, Rio 225, Rio 300, Roma 225, Sorrento 225, Sorrento 300, Tobago 225, Veracruz 225, Intrigue 5-Piece, Intrigue Slim 5-Piece, Strata 5-Piece, Strata Slim 5-Piece, Vogue 5-Piece, Vogue Slim 5-Piece, Terrace – available with 1/16" x 3/4" Strapping only.

Metal Accent Option (continued)

Double-Sided Tape – rolls available for purchase separately			
Tape Measurement	**Part Number**	**Price**	**Product Use Recomendation**
.05" W x 108' L	2626551A		1/4" x 3/4" Bar & 1/16" x 3/4" Strapping
0.188" W x 54' L	2626552A		1/4" x 1/4" Bar & 1/4" x 7/16" Angled Bar
Standard lead-time 10 days.			

Metal Accent Sample Kits

- Accent Sample Kits feature 5 trim pieces showcasing all 4 profiles and 5 finishes.
- Net price .
- Order using part #2600583A.



DripEdge Option



- Designed for the top edge of pull-out cabinet doors, often used with trash receptacles to protect from drips and spills, adding durability and style.
- Double-sided tape is pre-applied to the DripEdge for fast and convenient installation.

DripEdge Finishes	
	Brushed Aluminum, Flat Black, and Satin Brass.
Door/Drawer Design Edge Profiles	
	Recommended use with L-149, L-1160, and Machine Edge.

7/8" x 7/8" DripEdge						
	12.75"	**14.5"**	**15.75"**	**17.5"**	**18.75"**	**20.5"**
Brushed Aluminum						
Part Numbers	2626533A	2626536A	2626539A	2626542A	2626545A	2626548A
Flat Black						
Part Numbers	2626535A	2626538A	2626541A	2626544A	2626547A	2626550A
Satin Brass						
Part Numbers	2626534A	2626537A	2626540A	2626543A	2626546A	2626549A

Standard lead-time 10 days.

Edge Profiles



B
3/4" only
Rabbet: 7/16" deep
3/8" high

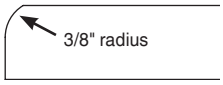

B-2*+
3/4" and 1"
Available w/MDF



C
3/4" only
Rabbet: 7/16" deep
3/8" high

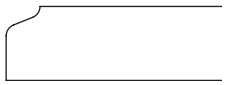

C-2+
3/4" and 1"
Available w/MDF

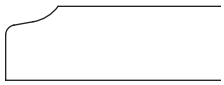

CFP-2*+
3/4" and 1"



E-2+
3/4" and 1"



FP
3/4" only



H-2*+
3/4" and 1"
Available w/MDF



J-2+
3/4" and 1"

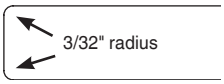

L-034*
3/4" and 1"
Available w/MDF

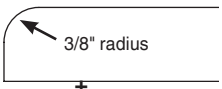

L-059*+
3/4" and 1"
Available w/MDF

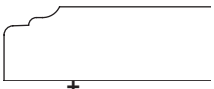

L-120+
3/4" and 1"

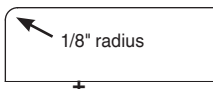

L-149*+
3/4" and 1"
Available w/MDF



L-253
3/4" and 1"
5° back bevel
Available w/MDF



L-281*+
3/4" and 1"

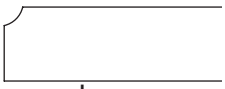

L-382*+
3/4" and 1"
Available w/MDF

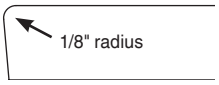

L-686
3/4" and 1"
5° back bevel
Available w/MDF



L-772+
3/4" and 1"

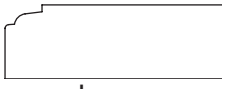

L-803*+
3/4" and 1"
Available w/MDF

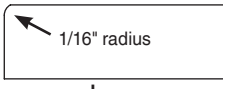

L-1160*+
3/4" and 1"
Available w/MDF



LC-2*+
3/4" and 1"
Available w/MDF



Machine Edge*+
3/4" and 1"
Available w/MDF

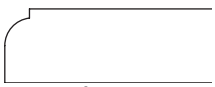

PRS-2*+
3/4" and 1"
Available w/MDF



RC-2+
3/4" and 1"

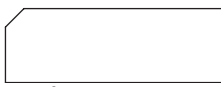

V-2*+
3/4" and 1"
Available w/MDF

Premium Edge Profiles

additional charge per door.
These three profiles require 2 additional working days.

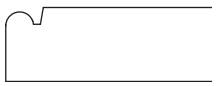

L-297*
3/4" and 1"



L-304
3/4" and 1"
5° back bevel



LC-Inset*
3/4" and 1"

FEP Rabbet Option

additional charge per door. No additional lead-time.

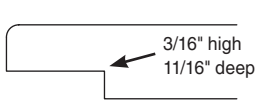

L-149 edge with FEP rabbet option

- Designed for use as a “finished end panel” to be used with Conestoga Cabinet Systems.
- All profiles marked with a **+** indicate FEP rabbet option is available.
- Available on 3/4" designs only.

* Drilling for concealed hinges is available on doors with these profiles.
\+ FEP Option available.
Images shown are not to scale.

Not all framing beads are available with all door designs – See Options and Availability pages. Design Charges include choice of published framing bead and panel raise.

Framing Beads

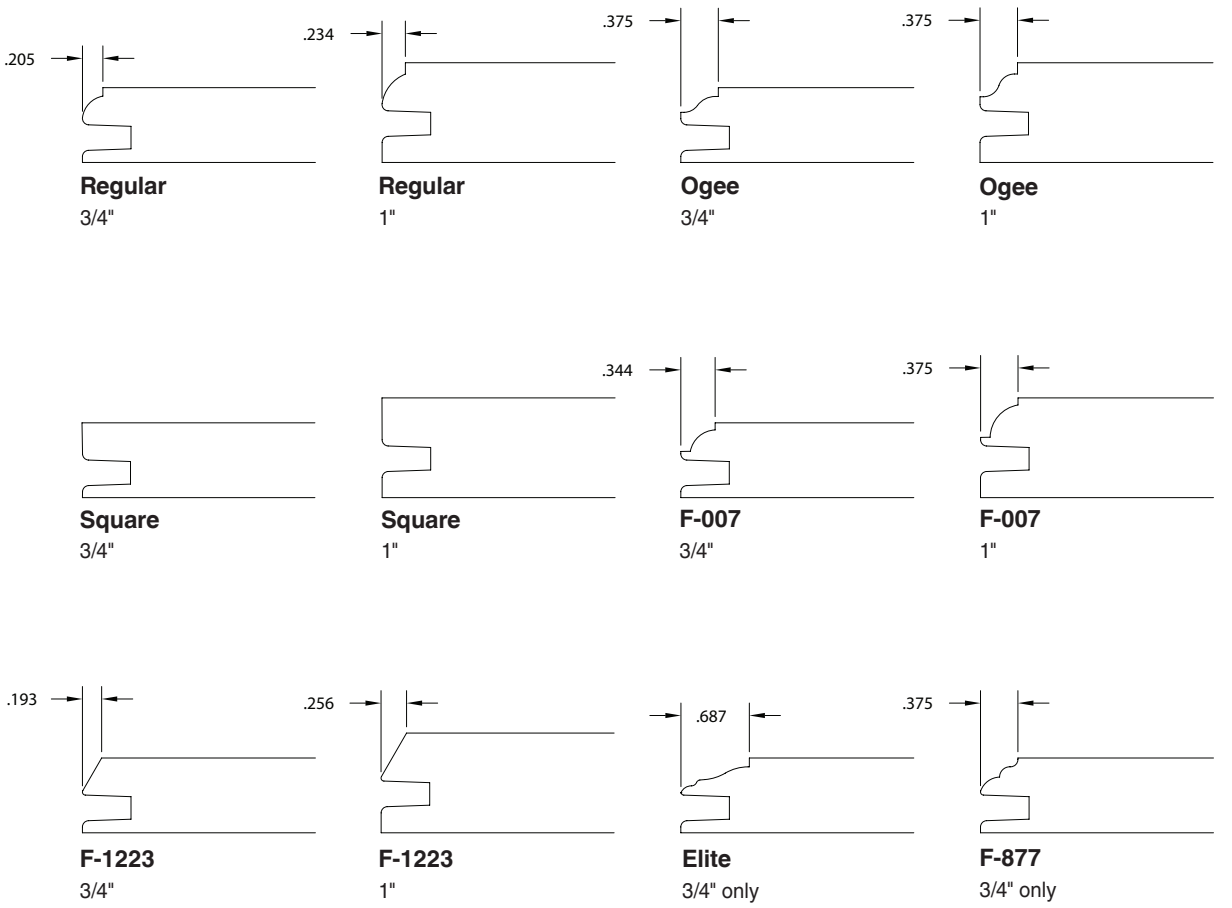

Not all panel raises are available with all door designs – See Options and Availability pages. Design Charges include choice of published framing bead and panel raise.

Panel Raises (dimensions shown are for 3/4" thick products only)

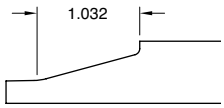

Slant
3/4" and 1"

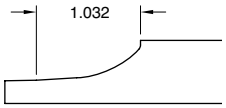

G-Cove
3/4" and 1"

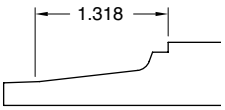

Louis XIII
3/4" only

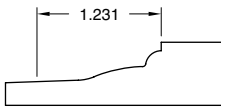

M-Bead
3/4" and 1"

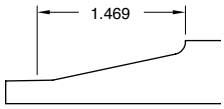

P-008
3/4" and 1"

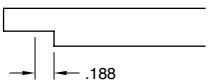

P-057
3/4" and 1"

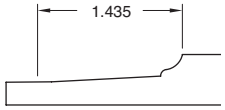

P-106
3/4" only

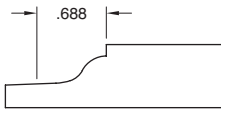

P-125
3/4" only

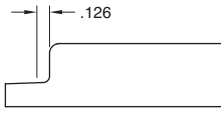

P-225*
3/4" only

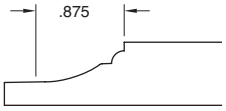

P-420
3/4" only

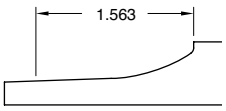

P-602
3/4" only

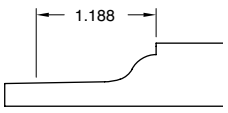

Presidential
3/4" only

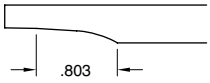

Reverse G-Cove
3/4" and 1"

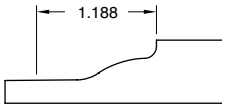

RM
3/4" and 1"

*P-225 raise not available when Colourtones, primers or Prism Paints are ordered.

All published 3/4" and 1" raises are available in hybrid products. Hybrid products consist of MDF panel and solid wood framing. 3/4" thick doors measure 5/8" finished panel thickness except Reverse G-Cove and P-057 which measure 3/8" thick and P-106 which measures 1/2" thick.

1" thick doors measure 3/4" finished panel thickness except Reverse G-Cove and P-057 which measures 1/2" thick.

Images shown are not to scale.

Options

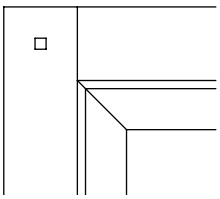

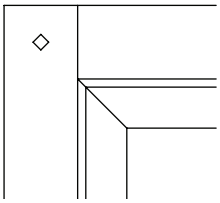

5/16" Square and Diamond Pegs

- list per Square Peg, list per Diamond Peg.
- For F-007, F-877, F-1223, Regular, Ogee and Square framing beads, pegs will be centered on stile one half of the total width of the stile and one half of the total width of the rail.
- For Elite framing bead, submit dimensioned sketch showing peg location.
- When ordering two pegs per corner, specify either diagonal Square or diagonal Diamond pegs.
- Pegs will be sanded flush with face of framing.
- Available in all published species; Natural finish or unfinished only; peg specie must be specified.
- Multi-panel doors will be pre-drilled for one peg at each interior joint, if requested.

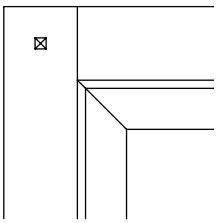

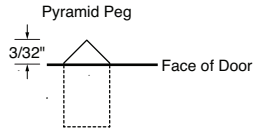

5/16" Pyramid Pegs

- list per peg.
- Pyramid Pegs will ship loose and doors will be pre-drilled to accept pegs.
- Pegs will be centered on stiles one half of the total width of the stile and one half of the total width of the rail.
- For Elite framing bead, submit dimensioned sketch showing peg location.
- When ordering two pegs per corner, order as diagonal Pyramid pegs.
- Multi-panel doors will be pre-drilled for one peg at each interior joint, if requested.
- Available in all published species; Natural finish or unfinished only; peg specie must be specified.

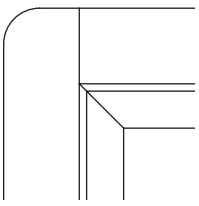

Radius Corners

- list per door.
- Specify 1/8", 1/4", 1/2" or 1" radius.
- Available with B-2, C-2, CFP-2, H-2, L-059, L-149, L-281, L-772, L-1160, LC-2, Machine Edge, PRS-2 and V-2 edge profiles only.

Options (continued)

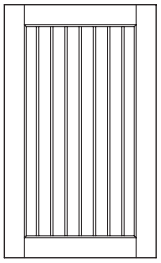

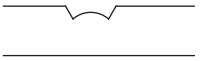

Groove width: 1/4"
Groove depth: 1/16"

G-012 Panel Groove

- list per panel.
- 1-1/2" spacing from center of groove to center of groove standard. Groove pattern begins from center of panel.
- Custom spacing available upon request.

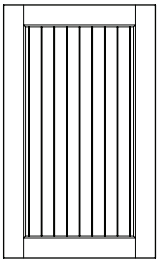

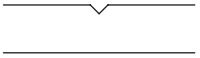

Groove width: 3/32"
Groove depth: 3/64"

G-015 Panel Groove

- list per panel.
- 1-1/2" spacing from center of groove to center of groove standard. Groove pattern begins from center of panel.
- Custom spacing available upon request.

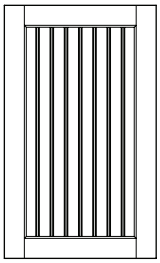



Groove width: 3/8"
Groove depth: 1/8"

G-056 Panel Groove

- list per panel.
- 1-1/2" spacing from center of groove to center of groove standard. Groove pattern begins from center of panel.
- Custom spacing available upon request.

Options (continued)

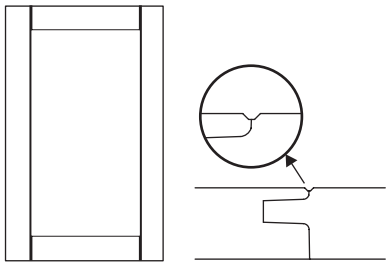

Essex Rout

- list per door.
- Rout is machined on full length of stiles.
- Rout is approximately 3/32" wide x 1/32" deep.
- Cannot be used with applied moulding designs, CRP-10141, CRP-10382MT, CRP-10605MT, CRP-10751MT, Fairhaven, Madison, SavannahMT, RutlandMT, RutlandMTPP, miter designs or Presidential series.
- Add 1 day to lead-time.

Hybrid Panel Prep & Seal Option

- list per panel.
- Hybrid doors and drawer fronts consist of 5-Piece construction utilizing solid wood framing with MDF panels. The MDF panel eliminates stave to stave glue lines that are sometimes visible after painting solid wood panels, as well as veneer seams and splits in plywood panel products.
- The Hybrid Panel Prep & Seal Option eliminates the problematic step of sealing machined areas of MDF panels in an assembled door. This option is especially recommended for products utilizing raised panels. Option not available with P-057 raise.
- This Prep & Seal Option consists of the application of a sealant on the machined areas of the panel. After curing, the sealant is scuff sanded to provide a smooth, finish ready surface. Normal prep sanding of the solid wood framing is still necessary.
- The Hybrid Panel Prep & Seal Option is valid only with unfinished doors and drawer fronts.

MDF 1-Piece, 5-Piece and Hybrid Seal Coat Option

- 1-Piece MDF –list per door, drawer front, Slab door or Slab drawer front.
- 5-Piece MDF and 5-Piece Hybrid –list per door or drawer front.
- The Hybrid and MDF Seal Coat Option consists of an initial machine sanding step in the manufacturing process, followed by the application of a sealant on the face and all machined surfaces including the panel raise, framing bead and edge profile. No sealant is applied to the back and there is no further sanding after the seal coat is applied to the face. Must be scuff sanded by customer before primer is applied.
- Solid wood framing in Hybrid products may show wood characteristics such as pin knots, sap pockets on Cherry and mineral streaks.
- Testing for compatibility and adhesion between Conestoga's Seal Coat and customer's finish materials should take place on a sample door prior to finishing any large items or multi-piece projects. We recommend only **acid cured conversion varnish topcoats**. Conestoga assumes no responsibility for incorrect application of finish materials by the customer that may result in poor adhesion, color mismatch or other finish related issues. Conestoga will not warrant products due to incompatibility issues between our seal coat and non-DuraGuard finish materials.
- All 1-Piece MDF, 5-Piece MDF and 5-Piece Hybrid doors and drawer fronts are available to receive this option.
- This option is available on Hybrid and MDF unfinished products only.
- Add 1 day to lead-time.

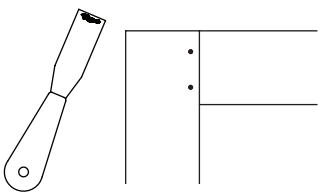

Putty Pin Holes

Options (continued)

End Grain Sealant Option

- list per door or drawer front. Multi-panel products will incur a charge per panel.
- Sealant is applied to the end grain of the panel raise and framing which results in a more uniform appearance between the end grain and face grain after finish is applied. While the End Grain Sealant Option will greatly improve the end grain appearance, end grain will still appear somewhat darker than non-end grain areas.
- The End Grain Sealant Option is available on all published species, panel raises and edge profiles.
- The End Grain Sealant Option is available with wiping and spray stains with the exception of Bordeaux, Dark Roast, Espresso, Nickel and Nitefall. End Grain Sealant Option is not available with primers, Colourtones or Prism Paints.
- Add 1 day to lead-time.

Wood Conditioner Option

- Sanding methods used to sand the face of contoured miter framing differs from how center panels are sanded. Depending on specie and finish combinations chosen, stains sometimes absorb quite differently between components resulting in a picture frame effect.
- To minimize color contrast between framing and panels, Conestoga developed a process to apply a wood conditioning treatment to the face of contoured miter framing, crown and trim mouldings. The result is a more uniform finished appearance of all components.
- Available on unfinished and finished miter doors and drawer fronts that meet both the design and specie criteria listed below.
- List pricing for the Wood Conditioner Option:
  - Doors and wainscot panels – list per panel.
  - Drawer Fronts – list per panel.
  - Mouldings: Wood Conditioner is automatically added to moulding finish pricing for applicable specie/finish combinations. Unfinished mouldings may receive this option for the following price: 8' length - per stick
9' to 12' length - per stick
- Any door design with a flat surface on the framing face (regardless of construction type) is not eligible for the Wood Conditioner Option because the wide belt sanding process negates the effect of the conditioner.
- Eligible published miter designs: CRP-10191, CRP-10318, CRP-10334, CRP-10875, CRP-10946, CRP-1420, LaSalle, Prestige, Rothsford, Woodhull and Woodridge.
- The Wood Conditioner Option is limited to select Alder, Cherry, Hard Maple, Soft Maple and White Birch mitered designs.
- Eligible finishes include Autumn, Chestnut, Colonial, Cordovan, Driftwood, Ginger, Harvest Gold, Honey, Portabella, Saddle and Washington Cherry wiping stains.
- Available on unfinished miter designs and species listed above. Wood Conditioner Option must be selected.
- All prefinished miter door and drawer front designs that meet the design, specie and finish criteria will automatically receive Wood Conditioner on framing. Customers have the option to decline this service, but must notify Customer Service via phone, email or through Con-Nex, our online ordering program.
- All prefinished mouldings that meet the specie and finish criteria will automatically receive Wood Conditioner.
- The Wood Conditioner Option does not include sealing center panel end grain. To further enhance the appearance of panel end grain, select the End Grain Sealant Option.

Options (continued)



Weathered Grain Option

- per panel.
- The Weathered Grain Option consists of random removal of surface material from panels, framing and edge profiles. Softer portions of the wood's surface are removed from the product's face, resulting in a highly textured look and feel.
- On 5-Piece products such as the CRP-10 door, only the face of the panel and framing and the outside edges of the door will receive the weathering process. Recessed machined areas such as panel grooves and framing beads will not be weathered.

- Only a limited portion of our product offering including door designs, profiles and species are eligible to receive the Weathered Grain Option. This offering was arrived at by running a series of tests on a wide variety of products and product options.
  - Eligible 3/4" door and drawer front designs: Albany, Amesbury, Ardmore, Astoria, Bristol, Cortland, Crossbuck, CRP-10, CRP-10 Pilaster, CRP-20, CRP-30, Flush Batten, Geneva, Juno, Lafayette, Radcliffe, Savoy, Sheldon, Slab, Stockbridge, TW-10, TW-10 Pilaster, TW-1038, TW-10716, TW-10916, Venus, Vulcan and Yardley. Select 1" thick designs and profiles available – contact Customer Service.
  - Eligible 3/4" species: Alder, Bamboo, Cherry, Hickory, Knotty Pine, Quarter Sawn White Oak, Red Oak, Rustic Knotty Alder, Rustic Knotty Cherry, Rustic Knotty Hickory, Rustic Knotty Red Oak, Thermally Treated Poplar, Walnut, White Oak and Rift Cut White Oak. All species listed also available in 1", except Bamboo and Thermally Treated Poplar.
  - Eligible framing beads: F-1223, Regular and Square only. Framing beads will not receive the weathering feature.
  - Eligible panel raises: P-057, Reverse G-Cove, and plywood center panels.
  - Eligible edge profiles: L-034, L-149, L-1160 and Machine Edge – edge profiles receive the Weathered Grain Option.
  - Eligible options with Weather Grain: back routed hand pull, concealed hinge boring, cross grain sand (back only), cut down framing, distressing levels 1 and 2, à la carte distressing options except wormhole clusters, G-012, G-015, G-056 panel grooves, putty pin holes, Soss hinge boring and wear sanding.
  - Eligible finishes: all Colourtones, Prism Paints, Truetones and wiping stains, both with and without glazes are available. Finish options include Antiquing. All finishes default to a 5° sheen topcoat, 10° sheen topcoat is also available upon request.
    Note: the Weathered Grain Option increases fiber raise which results in minor sand through in random areas. This is not considered defective and may actually enhance the weathered appearance.
- Maximum panel width is 35".
- Complementary products: non-beaded front frames, Plywood Pilaster Posts, raised panel valances, slab fillers, fluted fillers, mouldings, S4S cabinet framing, B09 Beaded Panel, #13 Batten, #14 Scribe, #381 Baseboard, #538 Shaker Crown, #1126 Shaker Crown, #1529 Reverse Shaker Crown, #1809 Scribe, #2073 Refacer's Moulding, #2316 Scribe and #2317 Scribe.

Options (continued)

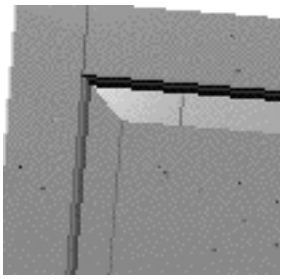

Rendering represents example only. Distressing is a random treatment; appearance of distressing will vary from piece to piece. A physical sample should be purchased before placing an order.

Distressing

- Level 1 – a random distribution of nicks and impressions. Design Charge,per square foot Material Charge.
- Level 2 – a random distribution of nicks and impressions, simulated wormholes, razor cuts and cut joints. Design Charge, per square foot Material Charge.
- Level 3 – a random distribution of nicks and impressions, simulated wormholes, rasp marks and cracks. Design Charge, per square foot Material Charge.
- Front frames, mouldings, ornaments and range hoods will receive modi- ied distressing. Treatments on range hoods will be limited in intensity and will vary by style of hood.
- Not eligible on 1-Piece MDF, 5-Piece MDF or Hybrid products.
- Add 1 day to lead-time.

Distressing À La Carte

- Any of four distressing treatments can be ordered individually, or grouped in various combinations.
- Distressing treatments create a look of aged cabinetry that has withstood years of everyday use. Each treatment option will be applied in a random fashion to simulate varying degrees of wear.
- Not eligible on 1-Piece MDF, 5-Piece MDF or Hybrid products.
- Distressing treatment selections can be tailored to include one, two, three or four selections from the following options:
  - **Nicks and Impressions** – a number of indentations and nicks will be randomly applied across the face of the door or drawer front. Indentations of various shapes and sizes will be found on framing and panel.
  - **Rasp Marks** – located on the exterior edges of doors and drawer fronts, rasp marks are created by applying downward pressure on a large-tooth file which is dragged at an angle across the edge of the door's exterior profile.
  - **Razor Cuts & Cut Joints** – will give the appearance of splits or surface cracks radiating from the ends of framing or panel and will run parallel to the grain. Random cuts typically range from 2-1/2" to 5" in length and may vary in width. Cut joints consist of highlighting or widening random joints with a utility knife to create a look of joints that have slightly opened from years of stress and frequent use.
  - **Wormhole Clusters** – appearance of wormhole clusters will be spaced randomly on the face of the door or drawer front. Clusters will vary in size, shape and appearance.
- Pricing is based on a Design Charge plus a material square footage charge. The first option will incur a Design Charge, regardless of the treatment chosen. Each subsequent treatment will incur an additional Design Charge. The Material Charge will remain at $.50 per square foot, regardless of the number of treatments selected.

  Pricing example: Wormhole Clusters and Rasp Marks on a 15" x 25" door.
  Wormhole Clusters

Options (continued)

Cross Grain Sanding

- The Cross Grain Sanding Option is available only on unfinished doors and drawer fronts.
- Please note, even with cross grain removal, doors are not finish-room ready. To prepare properly for finishing, we recommend a light white wood sand.
- This option is automatically included at no charge on prefinished products. Prices below are per panel for unfinished doors and wainscoting and per piece for other unfinished products such as drawer fronts and 1-Piece valances.
  - Face, back and edge profile
  - Face and edge profile only
  - Face and back only
  - Edge profile only
  - Face only

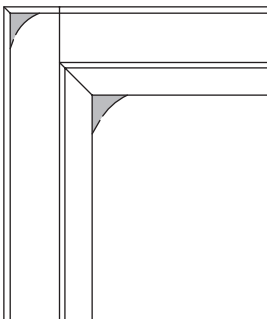

Wear Sanding

- list per panel.
- The Wear Sanding Option provides an aged appearance to unfinished doors and drawer fronts. On raised panel designs, sanding is applied to the corners of the panel and the outside corners of the framing. Recessed panels, mullions and frame only designs will receive sanding on the outside corners of the frame. Sanding will be random and each corner will vary in appearance.
- Wear Sanding is available on range hoods, but will be limited in intensity depending on the style of hood selected.
- Wear Sanding is not available on front frames.

Antiquing

- Design Charge, per square foot Material Charge.
- Antiquing is a random post-finish sanding treatment that exposes raw wood corners and edges. This treatment provides a complementary worn look to our distressing packages.
- To achieve a heavier level antiquing, combine this option with the Wear Sanding Option.
- Antiquing is not available on front frames.
- Antiquing is available on range hoods, but will be limited in intensity and will vary by style of hood.

Options (continued)

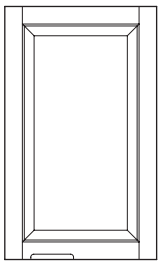

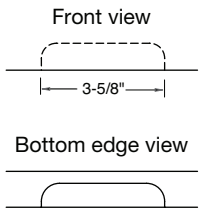

Back Routed Hand Pull

- List per door.
- Specify location: top or bottom and left, right or centered.
- Rout is 3-5/8" wide and 3/8" deep. When specifying left or right hand, pull will start 3" in from edge of door. Hand Pull is centered on doors less than 10" wide.
- Available with the following published edge profiles: L-034, L-059, L-149, L-281, L-382, L-803, L-1160, LC-2, Machine Edge and V-2.
- Add 1 day to lead-time.

Non-Standard Width Framing

Non-Standard Width Framing (1-1/4" minimum width)
Only available on mortise and tenon constructed doors

Width	Cost per stile and rail
1-1/4" to standard width	
Standard width to 6-7/16"	
6-1/2" to 8-3/4"	
*8-13/16" and wider	

*Stiles 8-13/16" wide and over automatically receive a mullion-type spline as a structural reinforcement. Charge for spline is list per stile. Add 4 days to lead-time.

Miter Bead Design with Non-Standard Framing Widths
CRP-10382MT, CRP-10751MT, CRP-1389MT, Madison, Presidential, RutlandMT, RutlandMTPP & SavannahMT

Framing Width	Cost per stile and rail
Standard width to 6-7/16"	
6-1/2" to 8-3/4"	
*8-13/16" and wider	

*Stiles 8-13/16" wide and over automatically receive a mullion-type spline as a structural reinforcement. Charge for spline is list per stile. Add 4 days to lead-time.

Wide framing may contain one or more glue joints, depending on overall desired width. The chart below lists the number of glue joints allowed in the different framing widths. These glue joints are considered acceptable.

Framing Glue Joint Parameters

Framing Width	Number of Acceptable Glue Joints
2-5/16" to 4" width	1 glue joint is acceptable
4-1/16" to 6" width	2 glue joints are acceptable
Over 6" in width	2 or more glue joints are acceptable

Options (continued)

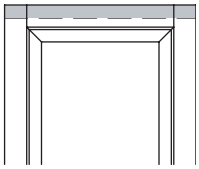

Cut Down (Width or Height)

- ist per door.
- The Cut Down Option is available for Wood/MDF mortise and tenon doors and drawer fronts and 3-Piece and 5-Piece Intrigue, Strata and Vogue TTS Alternative Materials products that are manufactured to the minimum size and cut down to achieve a smaller size. This option is not available for mitered designs.

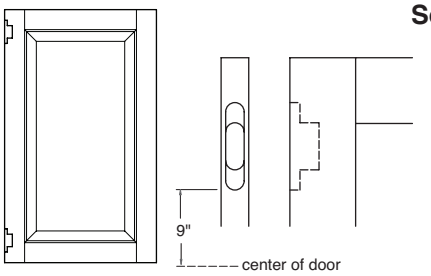

Soss Hinge Boring

- list per door. (assumes two bores).
- Routs are placed 9" off center, measured from the vertical center of the door to the start of the rout.
- Not available on doors over 42" high or under 25-1/8" high.
- Boring available on the following edge profiles only: L-149, L-1160 and Machine Edge.

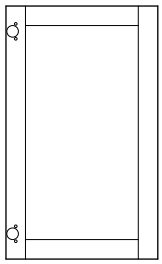

With insert holes

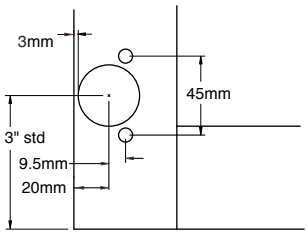

Cup Only

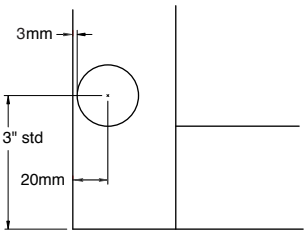

Concealed Hinge Boring: Pattern “A” 3mm

- list per door (assumes two bores).
- Hole placement primarily designed for framed cabinetry.
- Boring consists of a 35mm diameter hole, 13.5mm deep with a 3mm tab dimension from the edge of the door.
- Insert holes are 8mm in diameter, 11.9mm deep, located 9.5mm from the center of the 35mm bore to the center of the 8mm insert bore.
- Specify with insert holes or cup only.
- Doors 8-13/16"– 42" long receive two bores.
- Doors 42-1/16"– 72" receive three bores (upcharge applies).
- Doors 72-1/16" and longer receive four bores with center holes set 25" in from each end (upcharge applies).
- Boring available on the following edge profiles only: B-2, CFP-2, H-2, L-034, L-059, L-149, L-281, L-297, L-382, L-803, L-1160, LC-2, LC-Inset, Machine Edge, PRS-2 and V-2.
- Concealed Hinge Boring is available on inset/prefit doors. Pattern “A” with or without insert holes, L-149, L-1160 and Machine Edge only.
- Pattern “A” accommodates the following hinge models for framed cabinetry:

  Blum: Compact 33, 38C, 38N and 39C series.
  Grass: TEC series.
  Amerock: Matrix and 2811 series.
  Mepla: ACC162 (screw-in version).
  Salice: “S” series.

- Custom boring locations available – list per door. Specify dimension from top or bottom edge of door to center of cup locations.

Options (continued)

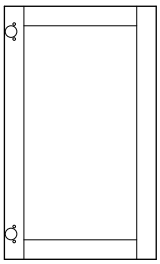

With insert holes

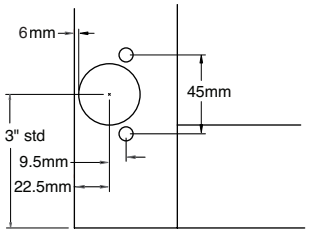

Cup Only

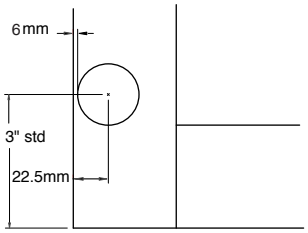

Concealed Hinge Boring: Pattern “B” 6mm

- list per door (assumes two bores).
- Hole placement primarily designed for frameless cabinetry, inset applications and some speciality hinges.
- Boring consists of a 35mm diameter hole, 13.5mm deep with a 6mm tab dimension from the edge of the door.
- Insert holes are 8mm in diameter, 11.9mm deep, located 9.5mm from the center of the 35mm bore to the center of the 8mm insert bore.
- Specify with insert holes or cup only.
- Doors 8-13/16"– 42" receive two bores.
- Doors 42-1/16"– 72" receive three bores with the third centered on the height of the door (upcharge applies).
- Doors 72-1/16" and greater receive four bores with center holes set 25" in from each end (upcharge applies).
- Boring available on the following edge profiles only: B-2, CFP-2, H-2, L-034, L-059, L-149, L-281, L-297, L-382, L-803, L-1160, LC-2, LC-Inset, Machine Edge, PRS-2 and V-2.
- Concealed Hinge Boring is available on inset/prefit doors with the following edge profiles: L-149, L-253, L-686, Machine Edge, L-947, L-967, L-304, L-996 and L-1160.
- Pattern “B” accommodates the following hinge models for frameless cabinetry:

  Blum: 107, 120, 120+, 170, Diagonal 20, 30, 37, 45, Angle 25 and CLIP Top Series.
  Grass: TEC, Nexis and Tiomos Series.
  Salice: 200 Series (use 2mm mounting plate).
- Custom boring locations available - list per door. Specify dimension from top or bottom edge of door to center of cup locations.

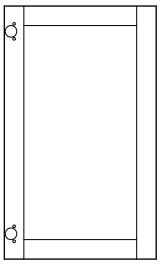

Concealed Hinge Boring: Pattern “C” 6mm

- st per door (assumes two bores).
- Hole placement primarily designed for frameless cabinetry.
- Boring consists of a 35mm diameter hole, 13.5mm deep with a 6mm tab dimension from the edge of the door.
- Insert holes are 8mm in diameter, 11.9mm deep, located 9.5mm from the center of the 35mm bore to the center of the 8mm insert bore.
- Specify with insert holes or cup only.
- Doors 10"– 42" receive two bores.
- Doors 42-1/16"– 72" receive three bores with the third centered on the height of the door ($1.00 upcharge applies).

Options (continued)

With insert holes

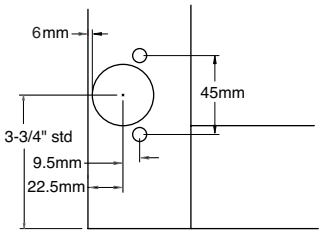

Cup Only

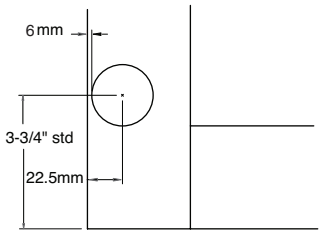

Concealed Hinge Boring: Pattern “C” 6mm (continued)

- Doors 72-1/16" and greater receive four bores with center holes set 25" in from each end (upcharge applies).
- Boring available on the following edge profiles only: B-2, CFP-2, H-2, L-034, L-059, L-149, L-281, L-297, L-382, L-803, L-1160, LC-2, LC-Inset, Machine Edge, PRS-2 and V-2.
- Concealed Hinge Boring is available on inset/prefit doors with the following edge profiles: L-034, L-149, L-253, L-686, Machine Edge, L-947, L-967, L-304, L-996 and L-1160.
- Pattern “C” accommodates the following hinge models for frameless cabinetry:

  Blum: 107, 120, 120+, 170, Diagonal 20, 30, 37, 45, Angle 25 and CLIP Top Series.
  Grass: TEC, Nexis and Tiomos Series.
  Salice: 200 Series (use 2mm mounting plate).
- Custom boring locations available - list per door. Specify dimension from top or bottom edge of door to center of cup locations.

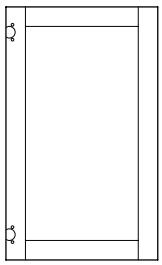

With insert holes

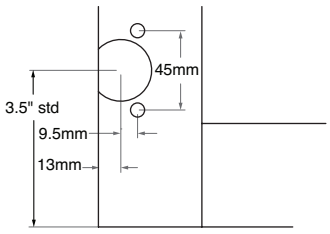

Cup Only

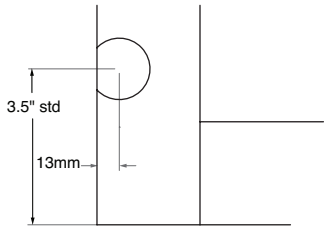

Concealed Bi-Fold Hinge Boring

- list per door.
- Hole placement is primarily designed for edge-mount style bi-fold hinges.
- Boring available on the following edge profiles only: B-2, CFP-2, H-2, L-034, L-059, L-149, L-281, L-297, L-382, L-803, L-1160, LC-2, LC-Inset, Machine Edge, PRS-2 and V-2.
- Boring consists of a 35mm diameter hole, 13.5mm deep, 12.5 mm on center from edge of the door.
- Insert holes are 8mm in diameter, 11.9mm deep, located 9.5mm from the center of the 8mm insert bore.
- Specify with insert holes or cup only.
- Doors 9-1/2" – 42" receive two bores.
- Doors 42-1/16" – 72" receive three bores with the third centered in the height of the door ($1.00 upcharge applies).
- Concealed bi-fold rout accommodates Blum’s CLIP top 60 degree bi-fold hinge (CWS #2103583), up to 13/16" thick only.
- Custom boring locations available - list per door. Specify dimension from top or bottom edge to the center of cup locations.

Options (continued)

HK-XS Hinge Boring

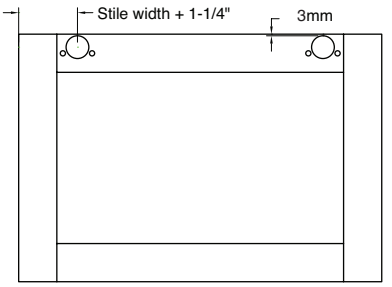

Pattern A

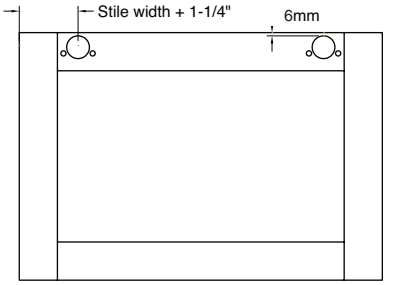

Pattern B

- list per door.
- Boring location designed specifically for Blum HK-XS lift mechanisms (CWS#'s 2103577, 2103578, 2103579 and 2103580).
  - Door width range: 12" – 72".
  - Door height range: 9-3/8" – 24".
- Hole place-ment is designed to rail mount concealed framed or frameless style hinges.
- HK-XS Pattern A Rout has a 3mm tab dimension from the edge of the door, primarily for framed cabinetry.
- HK-XS Pattern B Rout has a 6mm tab dimension from the edge of the door, primarily for frameless cabinetry.
- Boring consists of a 35mm hole 13.5mm deep placed on each end of the door 1-1/4" + the stile width of the door design.
- Specify with insert holes or cup only.
- Insert holes are 8mm in diameter, 11.9mm deep, located 9.5mm from the center of the 35mm cup bore.
- Doors 12" – 42" receive two bores.
- Doors 42-1/16" – 72" receive 3 bores ($1.00 upcharge applies).
- Boring available on the following edge profiles: B-2, CFP-2, H-2, L-034, L-059, L-149, L-281, L-382, L-803, L-1160, LC-2, Machine Edge, PRS-2, V-2, L-297 and LC-Inset.
- Custom boring locations are not available.

Aluminum Hand Pulls

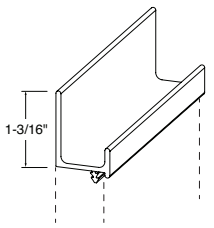

Front View
J-Style

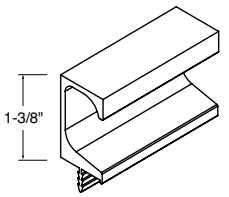

Side View
C-Style

- Design Charge: list per Slab door or drawer front, regardless of hand pull design selected.
- Material Charge: J-Style – Natural Aluminum: $.64 per linear inch.
  J-Style – Polished Chrome: $.79 per linear inch.
  C-Style – Natural Aluminum: $.55 per linear inch.
- Widths: Min. – 6", Max. – 48".
- Available on Astoria and Savoy, all Intrigue, Strata and Vogue TTS Slab products, Synchronicity Super Matte Slab products and Synchronicity High Gloss Mera Slab products.
- Not available with Sequential Grain Match Option.
- Doors and drawer fronts are routed on the top or bottom edge to accept hand pull – side rout not available.
- Hand pulls are cut-to-size, labeled to match the corresponding panel, wrapped and shipped separately.
- Hand pulls are designed with an integrated inset spline. Silicone caulk or construction adhesive should be used to affix the hand pull to the panel.
- Aluminum hand pull only option is available.
- When ordering Slab doors or drawer fronts with the Aluminum Hand Pull Option specify the total height of the door, including hand pull. Conestoga will subtract the height of the hand pull and size the panel accordingly.
- When ordering Slab doors or drawer fronts with the Hand Pull Option and concealed hinge boring, specify top or bottom for hand pull and left or right for hinge boring. For hinge bore to be located 3" from top edge, order as follows for each available hand pull:
  - J-Style – request 1-13/16" bore location on top/bottom of door.
  - C-Style – request 1-5/8" bore location on top/bottom of door.

Options (continued)



Wood/MDF Sample ID Label



Alternative Material Sample ID Label

Sample ID Label

- The Sample ID Label Option identifies specific attributes of door and drawer front samples. Labels are tack-free and easy to remove. Label is intended to be replaced with your company's customized label.
- net per door or drawer front.
- Available on doors and drawer fronts only; this option is not available on specialty or accessory products.
- ID labels are available on unfinished and finished doors and drawer fronts.
- Sample ID labels utilize Conestoga nomenclature, customization is not available.
- Label content will vary depending on material selected.
- Wood/MDF label includes: Conestoga design, specie/grade, bead, raise, edge profile, selected options, finishing information and package date.
- Alternative Materials label includes: Conestoga Design, color, selected options, order number and package date.
- All finished doors or drawer fronts will receive a second disclaimer label along with an ID label.

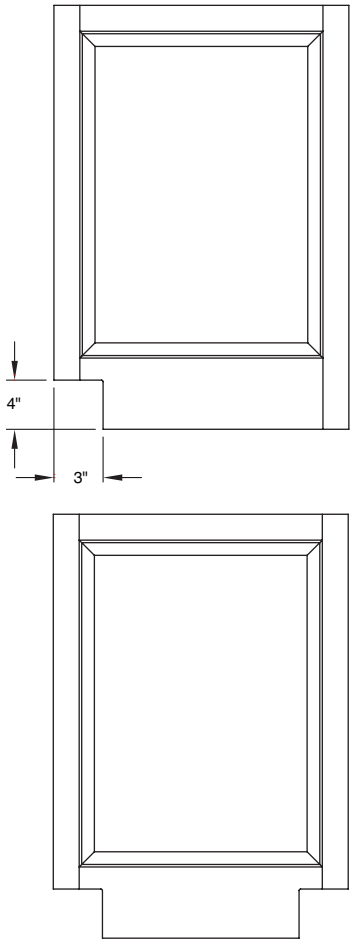

Toe Kick Notch

- list per notch.
- Available in 3/4" thick 5-Piece mortise and tenon doors with square bottom rails and Slab doors only.
- Standard Toe Kick Notch Option is 3" deep by 4" high and requires a bottom rail of 6" wide or greater. All other dimensions within the minimum and maximum depths and heights will be processed by Special Designs at no upcharge.
- Toe Kick Notch sizing is available in 1/16" increments.
- Minimum custom notch size is 2" deep by 2" high. Maximum custom notch size is 6" deep by 10" high.
- Width of bottom rail must exceed height of Toe Kick Notch by at least 2" to ensure joint integrity.
- Specify location of notch – left side, right side or with both left and right side notched.
- The inside corner of the Toe Kick Notch Option will have a 1/8" radius.
- Toe Kick Notch Option not valid with hinge boring.

Finishing Program Overview

- Conestoga's finishing capabilities allow our customers to simplify their shop process by eliminating the finishing of doors, mouldings and other products. Outsourcing finishing ultimately reduces VOC emissions and helps streamline throughput by minimizing the finishing bottleneck.
- Conestoga's finishing program consists of traditional wiping stains, Truetones, Colourtones, Prism Paints, glazes, primers and topcoats. Combined, these finish options create a palette of over 7,000 unique combinations.
- Conestoga has two topcoats available: 10° (low sheen) and 30° (medium sheen). Topcoat glosses will not be custom matched.
- In addition to our standard colors, custom color matching is available for wiping stains. Consult the pricing page within this section for information on custom color charges.
- **We strongly recommend that sample doors be purchased in the desired color and design prior to placing full kitchen orders. This will ensure that the combination of specie, finish and glaze meets your expectations.**

Finishing Process

- Prior to finishing, Conestoga's doors are sanded on the automated sanding line to deliver a smooth, "finish-ready" product.
- To apply wiping stains and glazes, Conestoga uses a time-proven, hand wiped technique which delivers more color consistency and depth than simple spray stain applications.
- Most Conestoga framing beads are designed with a slight back bevel, which allows the stain to penetrate beyond the juncture of the framing bead and panel raise. During the wiping stain process an air nozzle is used to blow stain under the framing bead, minimizing the possibility of "white line" appearing on the panel raise during expansion and contraction. All doors are matched to a control sample for color consistency during the staining process.
- Colourtones and Prism Paints are applied using air-assisted, airless equipment.
- After staining or painting products are loaded onto our flat line finishing system to receive a sealer and/or topcoat. Our sealer is a high solids material that is applied and then sanded with a fine grit sandpaper after drying. The final coat is the application of a high solids conversion varnish topcoat in either 10° or 30° sheen. Conversion varnishes provide a superior finish with exceptional clarity, resistance to moisture and excellent overall durability. Conestoga has selected the topcoat sheen that generally provides the most pleasing appearance for each finish type. However, in some cases customers do have the option of selecting an alternate topcoat sheen with no upcharge.
- After curing, doors are inspected before being packaged for delivery to our customers.

Finish Type	Standard Sheen	Optional Sheen
Colourtone	10°	NA
Colourtone w/glaze	10°	NA
Prism Paints	10°	NA
Prism Paints w/glaze	10°	NA
Truetones	10°	30°
Truetones w/glaze	10°	30°
Weathered Grain (all)	5°	10°
Wiping Stains	10°	30°
Wiping Stains w/glaze	10°	30°

Finishing Tolerances

- Conestoga's finishing tolerances are designed for solid wood applications. Application of finish on veneers, decorative accent items and MDF may result in some color variation. Similarly, finishes applied by the customer may vary slightly from those products finished by Conestoga. See the DuraGuard System information in this section for loose finish purchase information. Instructions for application are also published in this section and enclosed with DuraGuard finish orders.
- Conestoga cannot predict how a door, or portions of a door, will accept finish. Therefore, if a door meets our material specification standards in its unfinished state, it will be considered acceptable after finishing as well.

Finishing Warranties

- Conestoga's finishes carry a one year limited warranty against peeling or blistering, but no warranty against discoloration. Conestoga assumes no responsibility for damages or poor color match when finish is applied by the customer.
- Most wood species will naturally darken or yellow with age. Conestoga will not be held liable for the change in appearance of any product, finished or unfinished, due to this aging process.
- We strongly recommend that a sample door be ordered in the desired specie, design and finish prior to ordering a full kitchen, regardless of the finish and specie combination.
- Conestoga's finish materials are interior grade only and not intended for exterior use. Exposure to outdoor conditions will cause failure and will not be warranted.

Wiping Stains

- All Conestoga wiping stains are applied using a hand rubbed application. The process provides superior grain penetration of the finish material and a greater degree of depth.
- Lighter or white stains such as Alpine are not available over certain darker, high contrast species such as Mahogany or Walnut.
- Conestoga does not recommend darker finishes such as Colonial, Cordovan or Washington Cherry over light species such as Hard Maple or White Birch. The contrast, as well as the properties of these species, creates a blotchy, uneven look. Therefore, these combinations are Not Recommended (NR), but can still be produced with a 20% upcharge on the Design Charge and no warranty on color consistency.
- Because Conestoga uses wiping stains, and wiping stains penetrate into the wood grain, end grain will accept stain and glaze darker than other areas of the piece. This end grain contrast will not be considered defective.
  Note: Utilizing Conestoga's End Grain Sealant Option will minimize end grain contrast.

Custom Wiping Stain Match Program Guidelines

- A representative sample of the custom stain color and specie to be matched must be provided. Prior to shipping the color sample to Conestoga, customers must contact Customer Service to obtain a Return Merchandise Authorization (RMA) number that must be included with the sample being sent, along with a Custom Wiping Stain Match form found at the end of this section. A non-refundablenet fee will be invoiced when the custom stain match sample is recieved to the customer. Conestoga will not begin the matching process unless a Purchase Order has been provided. The matching fee applies regardless of whether the match is approved by the customer. Allow 10 business days for the completion of individual color matches.

- Accompanying the custom stain sample will be a Stain Match Approval Form. If the match is acceptable, sign and return the approval form to our Finishing department and we will assign a custom color mix number. This unique finish number must be referenced each time an order is placed for the custom stain. A custom stain Design and Finishing Material Charge applies to each order.

- At times, customers submit multiple stain matches for a similar color with the intention of selecting only one match. On these occasions, a net matching fee will apply to the primary stain match request, and a net fee for each subsequent stain match requested. This reduced matching fee applies only when each of the stain colors are relatively close in appearance and submitted at the same time. Any stain not close in color to the primary submission will be invoiced at the net fee. If an additional stain sample is submitted at a later date, it will be invoiced at the net fee, regardless of whether the stain is close in color to a prior submission.

- Frequently, we receive requests for multiple species with a stain match, or to add additional species and/or glaze treatments to a previously approved stain match. When these requests are received, Conestoga will generate a hard sample of the approved custom stain on each new specie or requested glaze. A Purchase Order number must be submitted along with the request as a net fee per individual request will invoiced at the time the sample is shipped to the customer. Conestoga will retain a portion of the sample to serve as a control sample to be used for future production needs.

Custom Wiping Stain Match Program Guidelines (continued)

- Custom stain mixes are kept on record as long as the finish continues to be used. If no orders for a custom stain are placed for a period of 1 year, the mix will be voided. This guarantees our customers a truly unique stain since it is matched to their exact specifications. Conestoga will only custom match wiping stains and will do so using pigmented wiping stain materials.
- Conestoga offers 2 topcoat glosses, 10° and 30°, with no option to custom match glosses.
- Quarts and gallons of custom stains can be purchased. Call Customer Service for pricing.

Truetones

- Conestoga's Truetone program consists of both High and Low complexity colors.
- Low Complexity Truetones are lightly pigmented spray to color stains that include a small percentage of solids. They produce a very clean look, with minimal blotchiness. After the Truetone application a sealer and conversion varnish topcoat are applied.
- High Complexity Truetones are a selection of deep, rich colors that are achieved through a two step application process. The first step is a hand wiped custom stain that brings out the color depth and grain clarity followed by a delicate application of a low solids spray stain. After this two-step application a sealer and conversion varnish topcoat are applied.
- Truetone finishes are also available with Brown, Onyx, Oyster and Sable wiping glazes.
- Specie availability includes Cherry, Hard Maple, Walnut and White Oak.
- Color range in an identical stain can and will vary from specie to specie, sometimes significantly.
- Non-glazed and glazed Truetone finishes receive a 10° sheen topcoat standard; however, 30° sheen topcoat is available but must be specified when placing order.
- Due to the haloing issue associated with applying spray stains to Square framing beads, Conestoga will not apply Truetone finishes to any product using our standard Square framing bead. However, products utilizing a shallow version of the Square bead are eligible to receive Truetone finishes.
- Normal contraction and expansion of the panels may cause unfinished areas, normally hidden by the framing bead to become visible, known as "white line".
- Profiled areas may appear lighter in color than flat areas on both Low and High Complexity Truetones because of the color application process. The effect could be enhanced by certain profiles, such as a square framing bead, deep grooves and anywhere there is a defined change in the plane of the part. Selecting a glaze option will minimize this effect on any Truetone color.
- As with any stain, veneers will absorb finish materials differently than solid wood. This absorption difference may result in a slight appearance variation between solid wood and veneered components and is not considered defective.
- Truetones range in color from light to dark. Therefore, they may or may not possess the ability to disguise material variations as well as wiping stains. The use of Premium grade material will mitigate some of these variations.
- End grain will appear darker than non-end grain areas, even when a glaze is applied. **Note: Utilizing Conestoga's End Grain Sealant Option will minimize end grain contrast.**
- When a distressing option is ordered, we recommend also adding a glaze to any Truetone finish to achieve the best overall appearance.

Traditional and Soft Wipe Glaze Option

- All Conestoga hand wiped glazes are applied using a hand rubbed application process to the entire surface of both the face and back of every door.
- Conestoga offers two hand wiped glaze options for wiping stains: Traditional and Soft Wipe. Choose Traditional for defined character with visible glaze hang in joints and profiles; or opt for Soft Wipe to achieve a subtle appearance with minimal glaze highlights.

Traditional and Soft Wipe Glaze Option (continued)

- Hand applied glazing is a very subjective treatment. Each door becomes a “one-of-a-kind” and unique appearance and could vary slightly from door to door, but will blend within a job. Conestoga matches every glazed piece to a control sample, however, color consistency is difficult to control on hand wiped glaze finishes. Factors that influence color consistency of hand wiped glaze finishes include door design, profiles, grain patterns, wood density, base color and the pre-glaze sanding process. Conestoga will not warrant these variations and considers them to be acceptable on hand wiped glaze products.
- We recommend that our customers develop a document that would be read and signed by the designer or end user indicating their understanding of the potential color issues with any stain and glaze finish. Such a document will help set customer expectations and protect all parties in the event of a color-based issue.
- **Conestoga strongly recommends a sample door be ordered in the desired design, specie and finish combination prior to ordering a full kitchen.**
- Conestoga maintains strict standards for its glazing processes. With this in mind, Conestoga will not custom match glaze colors or glaze application placement. Therefore, we offer only our standard glazing colors and treatment options.
- Wiping stain and Truetones with any glaze treatment receive a 10° sheen topcoat standard, however, 30° sheen topcoat is available but must be specified when placing order.
- Hand wiped glazes significantly alter the appearance of the stain/specie combination. An attractive finish may look quite different once glazed. With this in mind, Conestoga does not recommend certain finish/glaze/specie combinations, and some combinations are not available. See the Offering and Availability Charts in this section for details.
- Conestoga’s standard glaze offerings are available in combination with some custom wiping stain finish matches. For availability of glazing with custom stains, contact our Finishing Department 717-445-3252.

Wiping Stains with Pinstripe Glazes

- Conestoga’s Pinstripe Glaze Option allows the true base color of wiping stains to remain intact while providing contrasting, clean glaze lines that are applied by hand using a finely trimmed brush.
- Pinstripe glazes are applied to the face and edge profiles of doors and drawer fronts, but not the backs. Panel Grooves are not available with Pinstripe glaze.
- Door designs and profile selections are critical to determine the glaze line placements and will vary in intensity depending on the depth or width of the profile areas being glazed.
- Pinstripe glazes are available on select door/drawer front designs, mouldings, ornaments and specialty products.
- Pinstripe glaze lines will show some degree of variation from door to door depending on the design selected, but will not necessarily duplicate all of the glaze lines that appear in the hand wiped glaze application. In some cases there will be fewer glaze lines with Pinstripe glazing compared to hand wiped glazes.
- Available glaze colors for Pinstripe glazing on hand wiped stains include Brown, Caramel, Pewter and Sable.
- Pinstripe glazes on wiped stains receive a 10° sheen topcoat; 30° sheen topcoat not available.

Primed Products

- Conestoga’s priming capabilities allow you to outsource the time consuming process of prepping and priming your doors, drawer fronts and accessories. Outsourcing primed products reduces your company's VOC emissions and increases the efficiency and throughput of your finishing area.
- Conestoga offers 3 substrate materials for priming which include:
  - Solid wood – Cherry, Hard Maple, Paint Grade Hard Maple, Red Oak, Soft Maple and White Birch products are available in a wide variety of designs.

Primed Products (continued)

- Hybrid Products – hybrid products utilize Paint Grade Hard Maple framing in combination with 48-pound density MDF center panels. All published 1/4", 3/8", 5/8" and 3/4" panel raises are available in MDF material to use in a wide variety of wood framed door and drawer front designs.
- MDF – a 48-pound density MDF material. MDF products are limited to 1-Piece and 5-Piece design options (see the MDF and Alternative Materials Section of this manual).

- Conestoga offers 3 different types of primer applications:
  - Low Cost Primer – only available on Hybrid products, 1-Piece MDF and 5-Piece MDF products and is meant to achieve a modest price point. Solid wood and plywood products are not available with the Low Cost Primer Option. Before priming, any obvious voids or character marks will be filled and sanded, then a full coat of white primer is applied to the face and back. After the primer is applied, limited areas of roughness and open voids may be present. Conestoga will not fill or sand these characteristics after the primer is applied and they will not be considered defects.
  - Standard Primer – Standard Primer on wood products will be puttied and sanded, then a full coat of primer is applied to the face and back. All MDF and Hybrid products will also receive a detail coat of primer applied to all machined areas on the face (panel raises, framing beads and edge profiles). Once dry, the detail coat is scuff sanded and a full coat of primer is applied to the face and back. After the priming process is completed, limited areas of roughness and open voids may be present. The amount of these areas will vary from door to door and will not be filled or sanded by Conestoga.
  - Double Coat Primer – Double Coat primed wood products will be puttied and sanded, then receive a coat of primer applied to the face and back of the product. After drying, any voids that become apparent are puttied and any excess putty removed. The first primer coat is scuff sanded then a second full coat of primer is applied to the face and back. No further sanding will be done. MDF and Hybrid products will be puttied and sanded, then receive a detail coat of primer applied to all machined areas (panel raises, framing beads and edges profiles). Once dry, the detail coat is scuff sanded and a full coat of primer is applied to the face and back. After the first coat dries, any apparent voids are puttied. The first coat of primer is scuff sanded and a second full coat of primer is applied to the face and back. No further puttying or sanding will be done by Conestoga.
- Conestoga's primers are post catalyzed, acid cured and compatible with many high quality topcoats. Primer is available in white, light grey, medium grey, dark grey, sage and black.
- Prior to priming, the substrate is prepared to accept the coating material. Putty is applied to the joints, open end grain, tear outs and other visible voids. The product is then hand sanded to remove excess putty and provide a smooth, uniform surface to accept the primer coat.
- Most Conestoga framing beads are designed with a slight back bevel to allow some primer material to penetrate beneath the framing bead. However, due to the high solids content of the primer itself, bridging of the primer material may occur between the panel and the framing bead on 5-piece products. Moderate bridging is not considered a defect.
- After curing, doors are inspected, then packaged and shipped.
- There are many finishes available to paint residential cabinetry. While many of these products may work in combination with our primers, we recommend **only acid cured conversion varnish topcoats.** Testing for compatibility and adhesion between Conestoga's primers and customer's finish materials should take place on a test door prior to finishing any large items or multi-piece projects.
- Customers should scuff sand the primer using 280-grit sandpaper no more than 24 hours before applying any finish. All surfaces must receive this sanding step to achieve a mechanical bond.
- Conestoga's primed products receive one coat of putty prior to application of primer. Smaller voids will become apparent after the primer has been applied. These voids are acceptable and will require a second coat of putty by the customer prior to painting.
- Conestoga's primed products are subject to some natural grain raise during the priming process, which is not considered defective. Normal sanding preparation for topcoat application will remove these wood fibers.

Primed Products (continued)

- Conestoga's primed products are manufactured using substrate materials that will expand and contract with fluctuations in climate, temperature and humidity. The movement of the substrate will cause fracturing anywhere sub-components have been joined together.
- This fracturing is not considered defective and will most likely occur in the following areas:
  - Framing joints – where the stiles meet the rails on the face and back of doors, 5-piece drawer fronts, wainscot panels and front frames.
    Note: To decrease the chance of joint separation, utilize the MDF center panel option.
  - Edge profiles – in both mitered and mortise and tenon joint construction at the exterior edges of the product.
  - Center panels – where the panel recesses into the framing. Bridging of the coating materials can occur between the panel and framing. Natural expansion and contraction of the substrate may fracture the bridging.
  - Panel face – where individual adjacent staves in the panel expand and contract at different rates causing minor offsets or highlighting of glue joints. Because the individual staves of the panel continue to contract and expand, lines may appear on solid wood panels and offsets may develop from one stave to another. These stave lines will not be considered defective.
    Note: To eliminate panel stave offsets, utilize the MDF center panel option.
- Testing for compatibility and adhesion between Conestoga's primers and customer's finish materials should take place on a test door prior to finishing any large items or multi-piece projects. Conestoga assumes no responsibility for incorrect application of finish materials by the customer that may result in poor adhesion, color mismatch or other finish related issues. Conestoga will not warrant products due to incompatibility issues between our primers and non-DuraGuard finish materials.
- Primed products are individually wrapped, minimizing scuff marks.

Colourtones

- Colourtones are opaque finishes, identical in appearance to paint. The coatings are pigmented basecoats that must be catalyzed prior to application. Colourtones require the application of a clear coat of conversion varnish as the final coat.
- Colourtones have a high solids content, resulting in better build and lower VOC emissions.
- Colourtones with Cabinet Systems are available on Cherry, Hard Maple, Red Oak and Soft Maple.
- We recommend adding the Antiquing Option when Colourtones are ordered with Cherry. Characteristics common to Cherry, such as pin knots, mineral and pitch pockets will be present in finished products. The presence of these characteristics will not be considered defective. Refer to the Offering and Availability Chart in this section for species, finish and glaze availability.
- The machining of end grain or MDF on certain profiles may result in those surfaces being porous and the finish on these surfaces may not be as full as the finish on non-machined areas.
- Minor flaws such as dust particles, dimples and lint are more apparent with opaque finishes than with wiping stains. The presence of small amounts of these minor occurrences will be considered acceptable.
- Coatings containing high solids are susceptible to bridging between the framing and center panel. Bridging occurs when the coating material joins the two separate surfaces together. This condition is common between multiple component products and is not considered defective. Over time, the natural expansion and contraction of wood may cause this bridging to fracture.
- Colourtone products are placed on drying racks after the coating application process. Small indentations or pin marks from drying racks may appear on the backs of Colourtone products and are not considered defects.
- Colourtones may vary slightly from one batch to another, but will remain within a controlled color range.
- All Colourtone finishes will receive a 10° topcoat; 30° topcoat is not available.

Colourtones (continued)

- Because Colourtones contain a high percentage of solids, certain characteristics such as joint fracturing will occur. Hairline cracks typically develop along joints on the face, back and edge profiles and can occur during normal handling or from the expansion and contraction of wood. Joint fracturing is not considered to be a defect.
- As with most finishes, Colourtone colors will change over time due to exposure to light, pollution and household chemicals. Additions or replacements to existing kitchens may not initally match the original finished products already in place.
- Because the individual staves of the panel continue to contract and expand, lines may appear on solid wood panels and offsets may develop from one stave to another. These stave lines will not be considered defective.
  Note: To eliminate panel stave offsets, utilize the MDF center panel option.
- Veneer checking and seam separation are inherent characteristics of plywood panels and finished veneers that may appear to be cracks within the coating. These cracks are caused by changes within the veneer and will not be considered defective.
  Note: To eliminate veneer cracking, utilize the MDF center panel option.
- Customers interested in purchasing Colourtone finishing materials through the DuraGuard Program should reference DuraGuard Systems information found in this section for coatings pricing and availability.
- When purchasing multiple containers of loose Colourtone coating material, mix the contents of like finishes together prior to adding catalyst to achieve a consistent overall color.
- Catalyst must be added to all Colourtone finishes prior to application. The catalyzation process results in both a limited pot life and a recoat window. Mixture and application instructions are provided near the end of this section.
- We recommend that any topcoat other than DuraGuard products be tested for compatibility prior to application. Conestoga will not warrant products that fail due to non-compatible topcoat materials.
- Conestoga assumes no responsibility for incorrect application of DuraGuard materials by customers, which may result in poor adhesion, color mismatch or other finish related failures.

Prism Paints

- The Prism Paints program offers a selection of over 1,600 opaque colors. Do not place an order for a project utilizing Prism Paints based on the color represented in the fan deck. We strongly recommend a door sample of the actual finish be ordered prior to placing an order for a complete job. Conestoga will not assume responsibility for color related issues resulting from orders being placed without first ordering a sample door.
- Prism Paints may differ in appearance to other types of coatings such as acrylic, latex, enamels or other paint systems with the same color name and number. Both the clear topcoat and spray application will effect texture, sheen and color of this product. It is strongly reccomended that a finished sample door in the selected color be ordered prior to ordering a full kitchen.
- Prism Paints are available on 14" sample chips, but not 36" sample chips. A square foot minimum applies.
- Prism Paint coatings are acid catalyzed, pigmented basecoats, much like the Colourtone products. These coatings require the application of a final coat of clear conversion varnish.
- Prism Paints are available on Advantage and Vesta Cabinet Systems. However, Prism Paints with glaze are not available.
- Prism Paints with Cabinet Systems are available on Cherry, Hard Maple, Red Oak and Soft Maple.
- The machining of end grain or MDF may result in those surfaces being porous and the finish on these surfaces may not be as full or smooth as the finish on non-machined areas.
- Minor flaws such as dust particles, dimples and lint may be present with opaque finishes. The presence of a small quantity of these flaws will be considered acceptable.

Prism Paints (continued)

- Coatings containing high solids are susceptible to bridging between the framing and center panel. Bridging occurs when the coating material joins the two separate surfaces together. This condition is common between multiple component products and is not considered defective. Over time, the natural expansion and contraction of wood may cause this bridging to fracture.
- Products having been painted with Prism Paints will be placed on drying racks. Small indentations or pin marks from the drying racks may appear and will not be considered defective.
- Prism Paints may vary slightly from one batch to another, but will remain within a controlled color range. To avoid color variations, order all components for a project at one time.
- All Prism Paints will receive a 10° topcoat, 30° topcoat is not available.
- Because Prism Paints contain a high percentage of solids, certain characteristics such as joint fracturing will occur. Hairline cracks typically develop along joints on the face, back and edge profiles and can occur during normal handling or from the expansion and contraction of wood. Paint fracturing at joints is not considered to be a defect.
- As with most finishes, Prism Paint colors will change over time due to exposure to light, pollution and household chemicals. Additions or replacements to existing kitchens may not initially match finished products already in place.
- Because the individual staves of the panel continue to contract and expand, lines may appear on solid wood panels and offsets may develop from one stave to another. These stave lines will not be considered defective.
  Note: To eliminate stave offsets, utilize the MDF center panel option.
- Veneer checking and seam separation are inherent characteristics of plywood panels that may appear to be cracks within the coating. These cracks are caused by changes within the veneer and will not be considered defective.
  Note: To eliminate veneer checking, utilize the MDF center panel option.
- Customers interested in purchasing Prism Paint finishing materials through the DuraGuard Program should reference DuraGuard Systems information found in this section for coatings pricing and selection. It is strongly recommended that the DuraGuard paint be ordered at the same time as the finished parts to ensure an accurate color match.
- When purchasing multiple containers of loose Prism Paint coating material, mix the contents of like finishes together prior to adding catalyst to achieve a consistent overall color.
- Catalyst must be added to all Prism Paints prior to application. The catalyzation process results in both a limited pot life and a recoat window. Mixture and application instructions are provided near the end of this section.
- We recommend that any topcoat other than DuraGuard products be tested for compatibility prior to application. Conestoga will not warrant products that fail due to non-compatible topcoat materials.
- Conestoga assumes no responsibility for incorrect application of Prism Paint materials by customers, which may result in poor adhesion, color mismatch or other finish related failures.

Colourtones and Prism Paints with Hand Wiped Glazes

- Hand wiped glaze treatments offer a distinctive appearance, significantly altering the base Colourtone/Prism Paint color. The random nature of the hand wiped glazing option ensures slight variations from one product to the next, giving a unique look to the finished kitchen.
- Each hand wiped glaze possesses specific characteristics that determine the appearance of the glaze on finished parts. Coffee and Pewter glazes are heavily pigmented glazes; therefore, they create a significant color change to the base Colourtone/Prism Paint. Profiled areas where these glazes are applied develop dark lines that outline the profile. Chai and Oyster glazes are lighter in color and produce a more subtle color change to the base Colourtone/Prism Paint. They also produce much less of the highlighting effect in profiles areas.
- Colourtones/Prism Paints receiving the hand wiped glazed option will have slight inconsistencies in appearance. Variations, however slight, are inherent to this finish combination. To successfully market this product, education of your production personnel, installers, sales staff, designers and clients must take place.

Colourtones and Prism Paints with Hand Wiped Glazes (continued)

- Characteristics of hand wiped glaze finishes include variations in:
  - Glaze “hang” with noticeable variations on edge profiles, panel raises and applied mouldings.
  - Absorption into end grain on framing and panel raises.
  - Highlighting of machined areas, which normally do not appear with typical wiping stains or base Colourtone/Prism Paint colors.
  - Appearance of blotches and rag marks.
- Glazed Colourtones/Prism Paints will remain within a controlled range of color. However, individual pieces will vary slightly.
- As with any Colourtone/Prism Paint product, we do not recommend ordering plywood panel doors or other veneered products due the inherent cracking and checking that takes place in veneers. Veneer checking will not be considered a finishing defect.
  Note: To eliminate veneer checking, utilize the MDF center panel option.
- Use of hand wiped glazes on mitered and applied moulding products will greatly enhance any offset that may be present in the joint construction.
- MDF doors finished with Colourtones/Prism Paints and hand wiped glazes will have noticeable variations in glaze hang and absorption on profiled areas. Machined areas may contain small pinholes that are highlighted by the glaze and will not be considered defects.
- Cabinet Systems – when selecting a Colourtone/glaze finish on Cabinet Systems, be aware that some of the more popular Colourtone/glaze combinations have been matched with what is termed a Post Glaze finish. Post Glaze finishes are applied to the Cabinet Systems front frames and end panels and closely resemble the hand applied Colourtone/glaze combination. Be aware that while hand applied Colourtone/glaze and Post Glaze finishes provide a very close match on flat surfaces such as end panels, when glazes are hand applied to contoured areas such as profiled door framing, the appearance can vary and slight mismatches between end panels, front frames, doors and drawer fronts may occur. Slight mismatches between components finished with hand glazed Colourtones and Post Glazed Colourtone finishes are not considered defective as this same result can occur when the entire cabinet is finished with hand applied Colourtone/glaze finishes.
- The machining of end grain on certain profiles may result in those surfaces being porous and the finish on these surfaces may not be as full as the finish on non-end grain areas. This machining will cause the glaze to be darker on these areas than on non-end grain surfaces and are not considered to be defective.

Colourtones and Prism Paints with Pinstriped Glazes

- Conestoga’s Pinstripe Glaze Option allows the true base color of Colourtones and Prism Paints to remain intact while providing contrasting, clean glaze lines that are applied by hand using a finely trimmed brush.
- Pinstripe glazes are applied to the face and edge profiles of doors and drawer fronts, but not the backs. Panel Grooves are not available with Pinstripe glaze.
- Door designs and profile selections are critical to determine the glaze line placements and will vary in intensity depending on the depth or width of the profile areas being glazed.
- Pinstripe glazes are available on select door/drawer front designs, mouldings, ornaments and specialty products.
- Pinstripe glaze lines will show some degree of variation from door to door depending on the design selected, but will not necessarily duplicate all of the glaze lines that appear in the hand wiped glaze application. In some cases there will be fewer glaze lines with Pinstripe glazing compared to hand wiped glazes.
- Available glaze color for Pinstripe glazing on Colourtones and Prism Paints include Chai, Coffee, Onyx and Pewter.
- Pinstripe glazes on Colourtones and Prism Paints receive a 10° sheen topcoat only; 30° sheen topcoat not available.

Antiquing

- Antiquing is a random sanding process that takes place prior to glaze and topcoat. It is a rub through process, performed on corners and edges exposing bare wood, which will then be glazed and topcoated.
- Antiquing is not available on 1-piece or 5-piece MDF products or Hybrid doors with a raised panel face.
- To achieve a heavier level of antiquing, combine this option with our wear sanding option. Wear sanding is a process that softens and reshapes some profiled areas prior to finishing. Antiquing is the perfect complement to wear sanding and produces an authentic, worn look. See the Design Options Section for pricing.
- Antiquing and wear sanding are not available on front frames.
- Antiquing and wear sanding are available on range hoods, but may be limited in intensity depending on the style of the hood.

End Grain Sealant

- A sealant material is applied to the end grain of the panel raise and framing which results in a more uniform appearance between the end grain and face grain after finish is applied. While the End Grain Sealant Option will greatly improve the end grain appearance, end grain will still appear somewhat darker than non-end grain areas.
- The End Grain Sealant Option is available on all published species, panel raises, framing beads and edge profiles.
- The End Grain Sealant Option is available with wiping and spray stains with the exception of Bordeaux, Dark Roast, Espresso, Nickel and Nitefall. End Grain Sealant Option is not available with primers, Colourtones or Prism Paints.

Distressing

- Distressing Levels
  - Level 1 – a random distribution of nicks and impressions.
  - Level 2 – a random distribution of nicks and impressions, simulated wormholes, razor cuts and cut joints.
  - Level 3 – a random distribution of nicks and impressions, simulated wormholes, rasp marks and simulated cracks.
  - Individual distressing treatments are also available. See Design Options Section for treatment descriptions and pricing.
- Keep in mind that each option is random in application, designed to give doors and drawer fronts an aged, antique-like appearance. Most distress markings will typically not appear on raise profiles.
- Different door designs, styles and species will display distressing differently.
- Conestoga recommends ordering distressing with all prefinished Pine products because of the softness of Pine.
- Antiquing and distressing are subjective treatments. Conestoga only offers standard versions of these treatments. Custom antiquing and distressing is not available. See the Custom Finishing Chart in this section for pricing.
- Front frames and range hoods will receive a modified distressing package. Distressing on range hoods may be limited in intensity depending on the style of the hood.

Cross Grain Sanding

- This option is automatically included at no charge on prefinished doors and drawer fronts.

Customer Responsibilities

- All sample doors and swatches should be properly labeled with specie, finish color, date and sales order number.
- Sample doors and swatches should be stored in such a manner that they are not exposed to light or extreme heat for an extended period of time. Exposure to sunlight, indoor lighting or extreme heat will cause samples to discolor and will no longer be an accurate representation of color. Sample swatches should be discarded and replaced when their expiration date is reached.
- **Sample doors and swatches should be replaced every 12 months or when they become discolored.** Cherry will need to be replaced more frequently than other species. Conestoga cannot guarantee that a current order will match a sample more than 12 months old. Jobs sold from a sample swatch older than one year will not be warranted for color match.
- We strongly recommend that a full kitchen **not be sold from a color swatch or fan deck**. Order a sample door to show a greater array of possible character effects on a particular color, design and specie combination.
- For displays that are older than one year or that may be discolored, we recommend that customers obtain a current sample door in that specie, stain and glaze combination. Remember, display kitchens do change color due to their exposure to natural light, indoor lighting, heat and other conditions. The change that takes place is very gradual and may be difficult to detect, especially if viewed daily.
- If a job is ordered based on the color of a sample door or display, make sure the sample is less than one year old and the color is accurate. Customers asking for replacements because the job does not match their sample will be asked to provide the original sample sales order number so the age of the sample may be determined. **Conestoga will not warrant products for color mismatch if the sample is more than 12 months old or is discolored due to excessive exposure.**

Offering and Availability

	Colourtone Finishes and Traditional Wiping Glazes									
	Antique White	Arctic White	Cadet Grey	Crystal White	Designer White	Ebony*	Fern	Frosty White	Gunsmoke	Hearthstone Grey
Birch, White										
No Glaze	R	R	R	R	R	X	R	R	R	R
Chai	X	R	R	R	R	X	R	R	R	R
Coffee	X	R	R	R	R	X	R	R	R	R
Oyster	X	R	NR	R	R	X	NR	R	NR	NR
Pewter	X	R	R	R	R	X	R	R	R	R
Cherry										
No Glaze	NR	NR	R	NR	NR	R	R	NR	R	R
Chai	X	NR	R	NR	NR	X	R	NR	R	R
Coffee	X	NR	R	NR	NR	X	R	NR	R	R
Oyster	X	NR	NR	NR	NR	X	NR	NR	NR	NR
Pewter	X	NR	R	NR	NR	X	R	NR	R	R
Maple, Hard										
No Glaze	R	R	R	R	R	R	R	R	R	R
Chai	X	R	R	R	R	X	R	R	R	R
Coffee	X	R	R	R	R	X	R	R	R	R
Oyster	X	R	NR	R	R	X	NR	R	NR	NR
Pewter	X	R	R	R	R	X	R	R	R	R
MDF										
No Glaze	R	R	R	R	R	R	R	R	R	R
Chai	X	R	R	R	R	X	R	R	R	R
Coffee	X	R	R	R	R	X	R	R	R	R
Oyster	X	R	NR	R	R	X	NR	R	NR	NR
Pewter	X	R	R	R	R	X	R	R	R	R
Paint Grade Hard Maple										
No Glaze	R	R	R	R	R	R	R	R	R	R
Chai	X	R	R	R	R	X	R	R	R	R
Coffee	X	R	R	R	R	X	R	R	R	R
Oyster	X	R	NR	R	R	X	NR	R	NR	NR
Pewter	X	R	R	R	R	X	R	R	R	R
Oak, Red (incudes Rift Cut)										
No Glaze	R	R	R	R	R	R	R	R	R	R
Chai	X	R	R	R	R	X	R	R	R	R
Coffee	X	R	R	R	R	X	R	R	R	R
Oyster	X	R	NR	R	R	X	NR	R	NR	NR
Pewter	X	R	R	R	R	X	R	R	R	R

* Ebony Colourtones will magnify any small imperfection. It is strongly recommended that Ebony be sold only with antiquing or distressing. Small imperfections such as dust or lint will not be considered defects.

Using Offering and Availability Charts

Offering and Availability Charts should be referenced prior to placing an order.

- Locate the desired finish in the top row, then follow the row down to the desired specie/glaze combination found along the left column of the chart.
- The box where the finish, specie and glaze combination intersects, will contain one of the following references:

R = Recommended: These finish combinations refer only to the consistency of the finish application and not the aesthetic beauty of the combination.

NR = Not Recommended: These finish combinations are problematic and do not meet Conestoga's standards for color consistency. They also highlight various other characteristics such as machine marks and open end grain that will not be considered defective. NR combinations will receive a 20% upcharge to the Design Charge compensating for additional labor required for difficult combinations. Even if a sample door is purchased, we cannot guarantee that the next order will be an exact match to the sample door. Conestoga will not guarantee color consistency on NR combinations.

X = Not Available: Such combinations present application challenges which result in finish appearances Conestoga cannot consistently reproduce, and are not available.

Offering and Availability

Colourtone Finishes and Traditional Wiping Glazes

	Heron	Marina	Metropolitan Grey	Regent Blue
Birch, White				
No Glaze	R	R	R	R
Chai	R	R	R	R
Coffee	R	R	R	R
Oyster	NR	R	NR	R
Pewter	R	R	NR	R
Cherry				
No Glaze	R	NR	R	NR
Chai	R	NR	R	NR
Coffee	R	NR	R	NR
Oyster	NR	NR	NR	NR
Pewter	R	NR	NR	NR
Maple, Hard				
No Glaze	R	R	R	R
Chai	R	R	R	R
Coffee	R	R	R	R
Oyster	NR	R	NR	R
Pewter	R	R	NR	R
MDF				
No Glaze	R	R	R	R
Chai	R	R	R	R
Coffee	R	R	R	R
Oyster	NR	R	NR	R
Pewter	R	R	NR	R
Paint Grade Hard Maple				
No Glaze	R	R	R	R
Chai	R	R	R	R
Coffee	R	R	R	R
Oyster	NR	R	NR	R
Pewter	R	R	NR	R
Oak, Red (includes Rift Cut)				
No Glaze	R	R	R	R
Chai	R	R	R	R
Coffee	R	R	R	R
Oyster	NR	R	NR	R
Pewter	R	R	NR	R

R = Recommended: These finish combinations refer only to the consistency of the finish application and not the aesthetic beauty of the combination.

NR = Not Recommended: These finish combinations are problematic and do not meet Conestoga's standards for color consistency. They also highlight various other characteristics such as machine marks and open end grain that will not be considered defective. NR combinations will receive a 20% upcharge to the Design Charge compensating for additional labor required for difficult combinations. Even if a sample door is purchased, we cannot guarantee that the next order will be an exact match to the sample door. Conestoga will not guarantee color consistency on NR combinations.

X = Not Available: Such combinations present application challenges which result in finish appearances Conestoga cannot consistently reproduce, and are not available.

Offering and Availability

	Pinstripe Glazes – Colourtones									
	Antique White	Arctic White	Cadet Grey	Crystal White	Designer White	Ebony	Fern	Frosty White	Gunsmoke	Hearthstone Grey
Birch, White										
Chai	X	X	X	X	X	X	X	X	X	X
Coffee	R	R	R	R	R	X	R	R	R	R
Onyx	R	R	R	R	R	X	R	R	R	R
Oyster	X	X	X	X	X	X	X	X	X	X
Pewter	R	R	R	R	R	X	R	R	R	R
Cherry										
Chai	X	X	X	X	X	X	X	X	X	X
Coffee	R	R	R	R	R	X	R	R	R	R
Onyx	R	R	R	R	R	X	R	R	R	R
Oyster	X	X	X	X	X	X	X	X	X	X
Pewter	R	R	R	R	R	X	R	R	R	R
Maple, Hard										
Chai	X	X	X	X	X	X	X	X	X	X
Coffee	R	R	R	R	R	X	R	R	R	R
Onyx	R	R	R	R	R	X	R	R	R	R
Oyster	X	X	X	X	X	X	X	X	X	X
Pewter	R	R	R	R	R	X	R	R	R	R
MDF										
Chai	X	X	X	X	X	X	X	X	X	X
Coffee	R	R	R	R	R	X	R	R	R	R
Onyx	R	R	R	R	R	X	R	R	R	R
Oyster	X	X	X	X	X	X	X	X	X	X
Pewter	R	R	R	R	R	X	R	R	R	R
Paint Grade Hard Maple										
Chai	X	X	X	X	X	X	X	X	X	X
Coffee	R	R	R	R	R	X	R	R	R	R
Onyx	R	R	R	R	R	X	R	R	R	R
Oyster	X	X	X	X	X	X	X	X	X	X
Pewter	R	R	R	R	R	X	R	R	R	R
Oak, Red (incudes Rift Cut)										
Chai	X	X	X	X	X	X	X	X	X	X
Coffee	R	R	R	R	R	X	R	R	R	R
Onyx	R	R	R	R	R	X	R	R	R	R
Oyster	X	X	X	X	X	X	X	X	X	X
Pewter	R	R	R	R	R	X	R	R	R	R

R = Recommended: These finish combinations refer only to the consistency of the finish application and not the aesthetic beauty of the combination.

NR = Not Recommended: These finish combinations are problematic and do not meet Conestoga's standards for color consistency. They also highlight various other characteristics such as machine marks and open end grain that will not be considered defective. NR combinations will receive a 20% upcharge to the Design Charge compensating for additional labor required for difficult combinations. Even if a sample door is purchased, we cannot guarantee that the next order will be an exact match to the sample door. Conestoga will not guarantee color consistency on NR combinations.

X = Not Available: Such combinations present application challenges which result in finish appearances Conestoga cannot consistently reproduce, and are not available.

Offering and Availability

	Pinstripe Glazes – Colourtones			
	Heron	Marina	Metropolitan Grey	Regent Blue
Birch, White				
Chai	X	X	X	X
Coffee	R	R	R	R
Onyx	R	R	R	R
Oyster	X	X	X	X
Pewter	R	R	R	R
Cherry				
Chai	X	X	X	X
Coffee	R	R	R	R
Onyx	R	R	R	R
Oyster	X	X	X	X
Pewter	R	R	R	R
Maple, Hard				
Chai	X	X	X	X
Coffee	R	R	R	R
Onyx	R	R	R	R
Oyster	X	X	X	X
Pewter	R	R	R	R
MDF				
Chai	X	X	X	X
Coffee	R	R	R	R
Onyx	R	R	R	R
Oyster	X	X	X	X
Pewter	R	R	R	R
Paint Grade Hard Maple				
Chai	X	X	X	X
Coffee	R	R	R	R
Onyx	R	R	R	R
Oyster	X	X	X	X
Pewter	R	R	R	R
Oak, Red (includes Rift Cut)				
Chai	X	X	X	X
Coffee	R	R	R	R
Onyx	R	R	R	R
Oyster	X	X	X	X
Pewter	R	R	R	R

R = Recommended: These finish combinations refer only to the consistency of the finish application and not the aesthetic beauty of the combination.

NR = Not Recommended: These finish combinations are problematic and do not meet Conestoga's standards for color consistency. They also highlight various other characteristics such as machine marks and open end grain that will not be considered defective. NR combinations will receive a 20% upcharge to the Design Charge compensating for additional labor required for difficult combinations. Even if a sample door is purchased, we cannot guarantee that the next order will be an exact match to the sample door. Conestoga will not guarantee color consistency on NR combinations.

X = Not Available: Such combinations present application challenges which result in finish appearances Conestoga cannot consistently reproduce, and are not available.

Offering and Availability

Primed Only Low Cost	White	Light Grey	Medium Grey	Dark Grey	Black	Sage
MDF	R	X	X	X	X	X
Paint Grade Hard Maple Hybrid	R	X	X	X	X	X

Primed Only Standard	White	Light Grey	Medium Grey	Dark Grey	Black	Sage
Birch, White	R	R	R	R	R	R
Cherry	R	R	R	R	R	R
Maple, Hard	R	R	R	R	R	R
Maple, Soft	R	R	R	R	R	R
MDF	R	R	R	R	R	R
Paint Grade Hard Maple	R	R	R	R	R	R
Paint Grade Hard Maple Hybrid	R	R	R	R	R	R
Oak, Red (includes Rift Cut)	R	R	R	R	R	R

Primed Only Double Coat	White	Light Grey	Medium Grey	Dark Grey	Black	Sage
Birch, White	R	R	R	R	R	R
Cherry	R	R	R	R	R	R
Maple, Hard	R	R	R	R	R	R
Maple, Soft	R	R	R	R	R	R
MDF	R	R	R	R	R	R
Paint Grade Hard Maple	R	R	R	R	R	R
Paint Grade Hard Maple Hybrid	R	R	R	R	R	R
Oak, Red (includes Rift Cut)	R	R	R	R	R	R

R = Recommended: These finish combinations refer only to the consistency of the finish application and not the aesthetic beauty of the combination.

NR = Not Recommended: These finish combinations are problematic and do not meet Conestoga's standards for color consistency. They also highlight various other characteristics such as machine marks and open end grain that will not be considered defective. NR combinations will receive a 20% upcharge to the Design Charge compensating for additional labor required for difficult combinations. Even if a sample door is purchased, we cannot guarantee that the next order will be an exact match to the sample door. Conestoga will not guarantee color consistency on NR combinations.

X = Not Available: Such combinations present application challenges which result in finish appearances Conestoga cannot consistently reproduce, and are not available.

Offering and Availability

	Truetone Finishes and Traditional Glazes				
	Ashen	Cocoa	Desert Sand	Seaside	Shale
Cherry					
No Glaze	R	R	R	R	R
Brown	R	R	R	R	R
Onyx	R	R	R	R	R
Oyster	R	R	R	R	R
Sable	R	R	R	R	R
Maple, Hard					
No Glaze	R	R	R	R	R
Brown	R	R	R	R	R
Onyx	R	R	R	R	R
Oyster	R	R	R	R	R
Sable	R	R	R	R	R
Oak, White (includes Quarter Sawn and Rift Cut)					
No Glaze	NR	NR	NR	NR	NR
Brown	NR	NR	NR	NR	NR
Onyx	NR	NR	NR	NR	NR
Oyster	NR	NR	NR	NR	NR
Sable	NR	NR	NR	NR	NR
Walnut					
No Glaze	R	R	R	R	R
Brown	R	R	R	R	R
Onyx	R	R	R	R	R
Oyster	R	R	R	R	R
Sable	R	R	R	R	R

R = Recommended: These finish combinations refer only to the consistency of the finish application and not the aesthetic beauty of the combination.

NR = Not Recommended: These finish combinations are problematic and do not meet Conestoga's standards for color consistency. They also highlight various other characteristics such as machine marks and open end grain that will not be considered defective. NR combinations will receive a 20% upcharge to the Design Charge compensating for additional labor required for difficult combinations. Even if a sample door is purchased, we cannot guarantee that the next order will be an exact match to the sample door. Conestoga will not guarantee color consistency on NR combinations.

X = Not Available: Such combinations present application challenges which result in finish appearances Conestoga cannot consistently reproduce, and are not available.

CONESTOGA™ WOOD SPECIALTIES

Offering and Availability

	Wiping Stain Finishes and Traditional and Soft Wipe Glazes								
	Alpine	Autumn	Bordeaux	Chestnut	Colonial	Cordovan	Dark Roast	Driftwood	Espresso
Alder									
No Glaze	R	R	NR	R	R	R	R	R	NR
Brown	X	R	X	R	R	R	R	R	X
Caramel	X	R	X	R	R	R	R	R	X
Pewter	X	R	X	R	R	R	NR	R	X
Sable & Onyx	X	NR	NR	R	R	R	R	R	NR
White	R	R	X	X	X	X	X	R	X
Birch, Red/Birch, White									
No Glaze	R	R	R	R	R	R	R	R	R
Brown	X	R	X	R	R	R	R	R	X
Caramel	X	R	X	R	R	R	R	R	X
Pewter	NR	R	X	R	R	R	NR	R	X
Sable & Onyx	X	NR	R	R	R	R	R	R	R
White	R	R	X	X	X	X	X	R	X
Cherry									
No Glaze	X	R	R	R	R	R	R	R	R
Brown	X	R	X	R	R	R	R	R	X
Caramel	X	R	X	R	R	R	R	R	X
Pewter	X	R	X	R	R	R	NR	R	X
Sable & Onyx	X	R	R	R	R	R	R	R	R
White	X	NR	X	X	X	X	X	R	X
Hickory									
No Glaze	R	R	R	R	R	R	R	R	R
Brown	X	R	X	R	R	R	R	R	X
Caramel	X	R	X	R	R	R	R	R	X
Pewter	NR	R	X	R	R	R	NR	R	X
Sable & Onyx	X	R	R	R	R	R	R	R	R
White	NR	R	X	X	X	X	X	R	X
Maple, Hard/Bamboo									
No Glaze	R	R	NR	NR	NR	NR	NR	R	NR
Brown	X	R	X	NR	NR	NR	NR	R	X
Caramel	X	R	X	NR	NR	NR	NR	R	X
Pewter	NR	R	X	NR	NR	NR	NR	R	X
Sable & Onyx	X	NR	NR	NR	NR	NR	NR	R	NR
White	R	R	X	X	X	X	X	R	X
Maple, Soft									
No Glaze	R	R	NR	NR	NR	NR	NR	R	NR
Brown	X	R	X	NR	NR	NR	NR	R	X
Caramel	X	R	X	NR	NR	NR	NR	R	X
Pewter	X	R	X	NR	NR	NR	NR	R	X
Sable & Onyx	X	NR	NR	NR	NR	NR	NR	R	NR
White	R	R	X	X	X	X	X	R	X
Oak, Red (includes Rift Cut)									
No Glaze	R	R	R	R	R	R	R	R	R
Brown	X	R	X	R	R	R	R	R	X
Caramel	X	R	X	R	R	R	R	R	X
Pewter	NR	R	X	R	R	R	NR	R	X
Sable & Onyx	X	R	R	R	R	R	R	R	R
White	R	R	X	X	X	X	X	R	X
Oak, White (includes Quarter Sawn and Rift Cut)									
No Glaze	NR	NR	R	R	R	R	R	NR	R
Brown	X	NR	X	R	R	R	R	NR	X
Caramel	X	NR	X	R	R	NR	NR	NR	X
Pewter	NR	NR	X	R	R	NR	NR	NR	X
Sable & Onyx	X	NR	R	R	R	R	R	NR	R
White	NR	NR	X	X	X	X	X	NR	X
Pine									
No Glaze	NR	R	NR	R	R	R	R	R	NR
Brown	X	R	X	R	R	R	R	R	X
Caramel	X	R	X	R	R	R	R	R	X
Pewter	X	R	X	R	R	R	NR	R	X
Sable & Onyx	X	R	NR	R	R	R	R	R	NR
White	NR	R	X	X	X	X	X	R	X
Walnut									
No Glaze	X	R	R	R	R	R	R	R	R
Brown	X	R	X	R	R	R	R	R	X
Caramel	X	R	X	R	R	R	R	R	X
Pewter	X	R	X	R	R	R	NR	R	X
Sable & Onyx	X	R	R	R	R	R	R	R	R
White	X	NR	X	X	X	X	X	R	X

* See page 8.12 for key to Offering and Availability Chart.

Offering and Availability

	Wiping Stain Finishes and Traditional and Soft Wipe Glazes									
	Ginger	Harvest Gold	Honey	Natural	Nickel	Nitefall	Nutmeg	Portabella	Saddle	Washington Cherry
Alder										
No Glaze	R	R	R	R	R	NR	R	R	R	R
Brown	R	R	R	R	R	X	R	R	R	R
Caramel	R	R	R	R	R	X	R	R	R	R
Pewter	R	R	R	X	R	X	NR	R	R	R
Sable & Onyx	NR	R	R	R	X	NR	X	R	R	R
White	R	NR	X	R	R	X	R	R	X	X
Birch, Red/Birch, White										
No Glaze	R	R	R	R	R	R	R	R	R	R
Brown	R	R	R	R	R	X	R	R	R	R
Caramel	R	R	R	R	R	X	R	R	R	R
Pewter	R	R	R	NR	R	X	NR	R	R	R
Sable & Onyx	NR	R	R	X	X	R	X	R	R	R
White	R	NR	X	R	R	X	R	R	X	X
Cherry										
No Glaze	R	R	R	R	R	R	R	R	R	R
Brown	R	R	R	R	R	X	R	R	R	R
Caramel	R	R	R	R	R	X	R	R	R	R
Pewter	R	R	R	R	R	X	NR	R	R	R
Sable & Onyx	R	R	R	R	X	R	X	R	R	R
White	NR	NR	X	NR	R	X	X	R	X	X
Hickory										
No Glaze	R	R	R	R	R	R	R	R	R	R
Brown	R	R	R	R	R	X	R	R	R	R
Caramel	R	R	R	R	R	X	R	R	R	R
Pewter	R	R	R	R	R	X	NR	R	R	R
Sable & Onyx	R	R	R	X	X	R	X	R	R	R
White	R	R	X	R	R	X	R	R	X	X
Maple, Hard/Bamboo										
No Glaze	R	R	NR	R	R	NR	R	NR	NR	NR
Brown	R	R	NR	R	R	X	R	NR	NR	NR
Caramel	R	R	NR	R	R	X	R	NR	NR	NR
Pewter	R	R	NR	R	R	X	NR	NR	NR	NR
Sable & Onyx	R	R	NR	X	X	NR	X	NR	NR	NR
White	R	R	X	R	R	X	R	R	X	X
Maple, Soft										
No Glaze	R	R	NR	R	R	NR	R	NR	NR	NR
Brown	R	R	NR	R	R	X	R	NR	NR	NR
Caramel	R	R	NR	R	R	X	R	NR	NR	NR
Pewter	R	R	NR	R	R	X	NR	NR	NR	NR
Sable & Onyx	R	R	NR	X	X	NR	X	NR	NR	NR
White	R	R	X	R	R	X	R	R	X	X
Oak, Red (includes Rift Cut)										
No Glaze	R	R	R	R	R	R	R	R	R	R
Brown	R	R	R	R	R	X	R	R	R	R
Caramel	R	R	R	R	R	X	R	R	R	R
Pewter	R	R	R	NR	R	X	NR	R	R	R
Sable & Onyx	R	R	R	R	X	R	X	R	R	R
White	R	R	X	R	R	X	R	R	X	X
Oak, White (includes Quarter Sawn and Rift Cut)										
No Glaze	NR	NR	R	NR	NR	R	NR	R	R	R
Brown	NR	NR	R	NR	NR	X	NR	R	R	R
Caramel	NR	NR	R	NR	NR	X	NR	R	R	R
Pewter	NR	NR	R	NR	NR	X	NR	R	R	R
Sable & Onyx	NR	NR	R	NR	X	R	X	R	R	R
White	NR	NR	X	NR	NR	X	NR	NR	X	X
Pine										
No Glaze	R	R	R	R	R	NR	R	R	R	R
Brown	R	R	R	R	R	X	R	R	R	R
Caramel	R	R	R	R	R	X	R	R	R	R
Pewter	R	R	R	X	R	X	NR	R	R	R
Sable & Onyx	R	X	R	X	X	NR	X	R	R	R
White	R	R	X	NR	R	X	R	R	X	X
Walnut										
No Glaze	R	R	R	R	R	R	R	R	R	R
Brown	R	R	R	R	R	X	R	R	R	R
Caramel	R	R	R	R	R	X	R	R	R	R
Pewter	R	R	R	NR	R	X	NR	R	R	R
Sable & Onyx	R	R	R	R	X	R	X	R	R	R
White	NR	X	X	NR	R	X	X	R	X	X

* See page 8.12 for key to Offering and Availability Chart.

Offering and Availability

	Pinstripe Glazes – Wiping Stains								
	Alpine	Autumn	Bordeaux	Chestnut	Colonial	Cordovan	Dark Roast	Driftwood	Espresso
Alder									
Brown	X	R	X	R	R	R	R	R	X
Caramel	X	R	X	R	R	R	R	R	X
Pewter	X	R	X	R	R	R	R	R	X
Sable	X	NR	NR	R	R	R	R	R	NR
Birch, Red/Birch, White									
Brown	X	R	X	R	R	R	R	R	X
Caramel	X	R	X	R	R	R	R	R	X
Pewter	NR	R	X	R	R	R	R	R	X
Sable	X	NR	R	R	R	R	R	R	R
Cherry									
Brown	X	R	X	R	R	R	R	R	X
Caramel	X	R	X	R	R	R	R	R	X
Pewter	X	R	X	R	R	R	R	R	X
Sable	X	R	R	R	R	R	R	R	R
Hickory									
Brown	X	R	X	R	R	R	R	R	X
Caramel	X	R	X	R	R	R	R	R	X
Pewter	NR	R	X	R	R	R	R	R	X
Sable	X	R	R	R	R	R	R	R	R
Maple, Hard/Bamboo									
Brown	X	R	X	NR	NR	NR	NR	R	X
Caramel	X	R	X	NR	NR	NR	NR	R	X
Pewter	NR	R	X	NR	NR	NR	NR	R	X
Sable	X	NR	NR	NR	NR	NR	NR	R	NR
Maple, Soft									
Brown	X	R	X	NR	NR	NR	NR	R	X
Caramel	X	R	X	NR	NR	NR	NR	R	X
Pewter	X	R	X	NR	NR	NR	NR	R	X
Sable	X	NR	NR	NR	NR	NR	NR	R	NR
Oak, Red (includes Rift Cut)									
Brown	X	R	X	R	R	R	R	R	X
Caramel	X	R	X	R	R	R	R	R	X
Pewter	NR	R	X	R	R	R	R	R	X
Sable	X	R	R	R	R	R	R	R	R
Oak, White (includes Quarter Sawn and Rift Cut)									
Brown	X	NR	X	NR	NR	X	X	NR	X
Caramel	X	NR	X	X	NR	X	X	NR	X
Pewter	NR	NR	X	X	X	X	X	NR	X
Sable	X	NR	NR	NR	NR	NR	NR	NR	NR
Pine									
Brown	X	R	X	R	R	R	R	R	X
Caramel	X	R	X	R	R	R	R	R	X
Pewter	X	R	X	R	R	R	R	R	X
Sable	X	R	NR	R	R	R	R	R	NR
Walnut									
Brown	X	R	X	R	R	R	R	R	X
Caramel	X	R	X	R	R	R	R	R	X
Pewter	X	R	X	R	R	R	R	R	X
Sable	X	R	R	R	R	R	R	R	R

R = Recommended: These finish combinations refer only to the consistency of the finish application and not the aesthetic beauty of the combination.

NR = Not Recommended: These finish combinations are problematic and do not meet Conestoga's standards for color consistency. They also highlight various other characteristics such as machine marks and open end grain that will not be considered defective. NR combinations will receive a 20% upcharge to the Design Charge compensating for additional labor required for difficult combinations. Even if a sample door is purchased, we cannot guarantee that the next order will be an exact match to the sample door. Conestoga will not guarantee color consistency on NR combinations.

X = Not Available: Such combinations present application challenges which result in finish appearances Conestoga cannot consistently reproduce, and are not available.

Offering and Availability

	Pinstripe Glazes – Wiping Stains									
	Ginger	Harvest Gold	Honey	Natural	Nickel	Nitefall	Nutmeg	Portabella	Saddle	Washington Cherry
Alder										
Brown	R	R	R	R	R	X	R	R	R	R
Caramel	R	R	R	R	R	X	R	R	R	R
Pewter	R	R	R	X	R	X	NR	R	R	R
Sable	NR	R	R	R	X	NR	X	R	R	R
Birch, Red/Birch, White										
Brown	R	R	R	R	R	X	R	R	R	R
Caramel	R	R	R	R	R	X	R	R	R	R
Pewter	R	R	R	NR	R	X	NR	R	R	R
Sable	NR	R	R	X	X	R	X	R	R	R
Cherry										
Brown	R	R	R	R	R	X	R	R	R	R
Caramel	R	R	R	R	R	X	R	R	R	R
Pewter	R	R	R	R	R	X	NR	R	R	R
Sable	R	R	R	R	X	R	X	R	R	R
Hickory										
Brown	R	R	R	R	R	X	R	R	R	R
Caramel	R	R	R	R	R	X	R	R	R	R
Pewter	R	R	R	R	R	X	NR	R	R	R
Sable	R	R	R	X	X	R	X	R	R	R
Maple, Hard/Bamboo										
Brown	R	R	NR	R	R	X	R	NR	NR	NR
Caramel	R	R	NR	R	R	X	R	NR	NR	NR
Pewter	R	R	NR	R	R	X	NR	NR	NR	NR
Sable	R	R	NR	X	X	NR	X	NR	NR	NR
Maple, Soft										
Brown	R	R	NR	R	R	X	R	NR	NR	NR
Caramel	R	R	NR	R	R	X	R	NR	NR	NR
Pewter	R	R	NR	R	R	X	NR	NR	NR	NR
Sable	R	R	NR	X	X	NR	X	NR	NR	NR
Oak, Red (includes Rift Cut)										
Brown	R	R	R	R	R	X	R	R	R	R
Caramel	R	R	R	R	R	X	R	R	R	R
Pewter	R	R	R	NR	R	X	NR	R	R	R
Sable	R	R	R	X	X	R	X	R	R	R
Oak, White (includes Quarter Sawn and Rift Cut)										
Brown	NR	NR	NR	NR	NR	X	NR	NR	NR	NR
Caramel	NR	NR	NR	NR	NR	X	NR	NR	NR	NR
Pewter	NR	NR	NR	NR	NR	X	NR	NR	NR	NR
Sable	NR	NR	NR	NR	NR	NR	X	NR	NR	NR
Pine										
Brown	R	R	R	R	R	X	R	R	R	R
Caramel	R	R	R	R	R	X	R	R	R	R
Pewter	R	R	R	X	R	X	NR	R	R	R
Sable	R	X	R	X	X	NR	X	R	R	R
Walnut										
Brown	R	R	R	R	R	X	R	R	R	R
Caramel	R	R	R	R	R	X	R	R	R	R
Pewter	R	R	R	NR	R	X	NR	R	R	R
Sable	R	R	R	R	X	R	X	R	R	R

R = Recommended: These finish combinations refer only to the consistency of the finish application and not the aesthetic beauty of the combination.

NR = Not Recommended: These finish combinations are problematic and do not meet Conestoga's standards for color consistency. They also highlight various other characteristics such as machine marks and open end grain that will not be considered defective. NR combinations will receive a 20% upcharge to the Design Charge compensating for additional labor required for difficult combinations. Even if a sample door is purchased, we cannot guarantee that the next order will be an exact match to the sample door. Conestoga will not guarantee color consistency on NR combinations.

X = Not Available: Such combinations present application challenges which result in finish appearances Conestoga cannot consistently reproduce, and are not available.

CONESTOGA™ WOOD SPECIALTIES

Custom Finishing Pricing			
Finish Category		**Design Charge**	**Material Charge** (per sq. ft.)
Natural Finish			
Wiping stain, Low Complexity			
Wiping stain, High Complexity			
Truetones, Low Complexity			
Truetones, High Complexity			
Colourtones (on wood)			
Colourtones (on hybrid** and MDF)			
Primer - low cost white (on hybrid** and MDF)			
Primer - standard white (on wood)			
Primer - standard white (on hybrid** and MDF)			
Primer - double coat white (on wood)			
Primer - double coat white (on hybrid** and MDF)			
Primer - standard all greys, black or sage (on wood)			
Primer - standard all greys, black or sage (on hybrid** and MDF)			
Primer - double coat all greys, black or sage (on wood)			
Primer - double coat all greys, black or sage (on hybrid** and MDF)			
Prism Paints - Pastels (on wood)			
Prism Paints - Deeptones (on wood)			
Prism Paints - Bold (on wood) - doors only			
Prism Paints - Pastels (on hybrid** and MDF)			
Prism Paints - Deeptones (on hybrid** and MDF)			
Prism Paints - Bold (on hybrid** & MDF) - doors only			
Finish Options			
Hand wiped glazes - Traditional			
Hand wiped glazes - Soft Wipe			
Pinstripe glazes			
Antiquing			
End Grain Sealant			
Custom Wiping Stain Match (Initial match chart)			
Custom Wiping Stain	Low Complexity		
	High Complexity		

Finish Complexity/Color Selection		
Natural Finish	Clear sealer and topcoat	
Wiping Stains	Low Complexity	Autumn, Colonial, Ginger, Harvest Gold, Honey, Nutmeg, Portabella, Saddle, Washington Cherry
	High Complexity	Alpine, Bordeaux, Chestnut, Cordovan, Dark Roast, Driftwood, Espresso, Nickel, Nitefall
Truetones	Low Complexity	Desert Sand
	High Complexity	Ashen, Cocoa, Seaside, Shale
Colourtones	Antique White, Arctic White, Cadet Grey, Crystal White, Designer White, Ebony, Fern, Frosty White, Gunsmoke, Hearthstone Grey, Heron, Marina, Metropolitan Grey, Regent Blue	
Hand Wiped Glazes * **	Brown, Caramel, Chai, Coffee, Onyx, Oyster, Pewter, Sable, White	
Pinstripe Glazes * **	Brown, Caramel, Chai, Coffee, Onyx, Oyster, Pewter, Sable	

☒ net surcharge for Pastel finishes, net surcharge for Deeptone finishes and net surcharge for Bold Prism Paint finishes on orders under 10 square feet.

**Hybrid door features MDF panel and solid wood framing.

*** The glaze colors represent the general colors offered, however only specific glazes are available with different finish types. See the finishing charts on the prior pages for eligible glaze options.

Ancillary Products Finishing Pricing		
Product	**Design Charge Multiplier**	**Material Charge**
CWS-10302 and CWS-10446 louver doors	3x	2 sq. ft. min.
8 foot linear mouldings (face only) – add Wood Conditioner fee (for select species and finishes see page 7.6)	1x	2 sq. ft.
8 foot linear mouldings (face and back), assembled mouldings	2x	5 sq. ft.
9 to 12 foot linear mouldings (face only) – add Wood Conditioner fee	2x	3 sq. ft.
9 to 12 foot linear mouldings (face and back), assembled mouldings	3x	7 sq. ft.
Random length moulding (face only)	1x	2 sq. ft. per 8 ft. length
24" x 96" Pressure sensitive wood backed veneers/polyback veneers	1x	8 sq. ft.
48" x 97" Wood-backed veneers/polyback veneers	1x	13 sq. ft.
Wainscot panels Finished one side and edges, back surface sealed but not stained	1x	actual sq. footage
Finished both sides and edges	2x	actual sq. footage x 1.25
Lattice Wine Racks Standard*, Square*	3x	actual sq. footage
Stemware holders, Half round wine racks	2x	actual sq. footage
Valances, fillers, fluted fillers, pilaster doors, knee brackets	1x	actual sq. footage
Front Frames 1 opening 2-3 openings 4-5 openings 6-7 openings 8+ openings	1x 1.5x 2x 2.5x 3x	$\frac{[(\text{width} + \text{height}) \times 2] \times 4}{144}$ actual square footage (3 sq. ft. min.)
Finish back of Front Frames	Double Design Charge above	actual sq. footage (3 sq. ft. min.)
Plywood panels 1/8", 1/4", 3/4" (face only)**	1x	actual sq. footage ÷ 2
Plywood panels 3/4" (face and back)	2x	actual sq. footage
Corbels, split table legs, split decorative columns, 2-sided pilaster posts	2x	2 sq. ft.
Outlet and switch plates, wood vent covers	1.5x	1 sq. ft.
Feet, spindles, all other accent pieces	1x	1 sq. ft.
Table legs, 3/4 round table legs, decorative columns, 3 & 4-sided pilaster posts	3x	3 sq. ft.
Range Hoods		
Batten Select, Select	3x	12 sq. ft.
Estate Canopy	6x	15 sq. ft.
Artisan, B, BX, CHW, E, E3, ER300, FX, FXBPUP, FX2HW, FX2PL, G, K300, P, T, VCHIM-SV, Z200 (45" or less in width)	6x	25 sq. ft.
Artisan, B, BX, CHW, E, E3, ER300, FX, FXBPUP, FX2HW, FX2PL, G, K300, P, T, VCHIM-SV, Z200 (45-1/16"+ in width)	8x	25 sq. ft.
AX3, BXB, CHWB, Farmhouse w/Chimney, GRA, I, Modern Tapered w/Chimney, TRA, VCHIM-AV, VCHIM-VRS, Waterfall (all sizes)	8x	25 sq. ft.
H2, M, S, SB100 (45" or less in width)	8x	25 sq. ft.
H2, M, S, SB100 (45-1/16" + in width)	11x	50 sq. ft.
SRA (all sizes)	11x	50 sq. ft.

* Lattice wine racks are finished on the face and profiles only, a 25% upcharge will be incurred to finish the back. Pin holes on the back of lattice wine racks will not be puttied.

**1/8" Plywood panels only available finished on face only.

Wood Edgebanding 500' Rolls*			
Finish	**Price per roll**	**Finish**	**Price per roll**
Natural		Colourtones	
Wiping Stain – Low Complexity		Prism Paints – Pastel Colors	
Wiping Stain – High Complexity		Prism Paints – Deeptone Colors	
Truetones – Low Complexity		Prism Paints – Bold Colors	
Truetones – High Complexity			

*To add a Glaze to Wiping Stains, Truetones, Colourtones and Prism Paints, add list to non-glazed wood edgeband price. Cherry and Hard Maple wood edgebanding is also available in 250' rolls. Visit Con-Nex® or contact Customer Service for pricing.

Finish Sample Kits

Cherry	Hickory/Walnut	Maple, Hard	Oak	Colourtones
Stain/Glaze	**Stain/Glaze**	**Stain/Glaze**	**Stain/Glaze**	**Colourtone/Glaze**
Autumn Bordeaux Chestnut Colonial Cordovan Dark Roast Driftwood Driftwood/Brown Driftwood/Caramel Driftwood/Onyx Driftwood/Pewter Driftwood/Sable Driftwood/White Espresso Ginger Harvest Gold Honey Natural Nickel Nitefall Nutmeg Portabella Saddle Washington Cherry	**Hickory** Autumn Chestnut Dark Roast Driftwood Natural Portabella Portabella/Brown Portabella/Caramel Portabella/Onyx Portabella/Pewter Portabella/Sable Portabella/White Saddle **Walnut** Autumn Colonial Driftwood Espresso Ginger Harvest Gold Natural Nickel Nitefall Nutmeg Portabella Saddle	Alpine Autumn Autumn/Brown Autumn/Caramel Autumn/Onyx Autumn/Pewter Autumn/Sable Autumn/White Bordeaux Chestnut Colonial Cordovan Dark Roast Driftwood Espresso Ginger Harvest Gold Honey Natural Nickel Nitefall Nutmeg Portabella Saddle Washington Cherry	**Oak, Red** Autumn Chestnut Dark Roast Harvest Gold Honey Natural Nutmeg Saddle **Oak, White** Alpine Autumn Colonial Driftwood Espresso Ginger Natural Natural/Brown Natural/Caramel Natural/Onyx Natural/Pewter Natural/Sable Natural/White Nickel Nitefall Nutmeg Portabella	**Cherry** Crystal White/Antiqued Ebony/Antiqued **Maple, Hard, Paint Grade** Antique White Arctic White Cadet Grey Crystal White Designer White Ebony/Antiqued Fern Frosty White Frosty White/Chai Frosty White/Coffee Frosty White/Oyster Frosty White/Pewter Gunsmoke Hearthstone Grey Heron Marina Metropolitan Grey Regent Blue

Truetones
Stain/Glaze
Cherry
Ashen Cocoa Desert Sand Seaside Shale
Maple, Hard
Ashen Ashen/Brown Ashen/Onyx Ashen/Oyster Ashen/Sable Cocoa Desert Sand Seaside Shale
Oak, White
Ashen Cocoa Desert Sand Seaside Shale
Walnut
Ashen Cocoa Seaside Shale

Pricing per kit: Wiping stains (Cherry, Hard Maple, Hickory/Walnut or Oak) and Truetone kit: . Colourtone kit: .

Specifications: Swatch size: 4-1/4" x 6-1/8".
Swatch has G-084 groove on face – except for finishes with Chai and Oyster glazes.
Each swatch is individually labeled.

Kits are packed in a labeled file box, reducing the need to remove individual swatches for identification; this limits the exposure to light that accelerates color change.

Larger Swatch Size

Individual Recommended and Not Recommended finishes are available on 6-1/8" x 14" chips.

Wiping stains and Truetones Colourtones
net.
Prism Paint Pastels.
Prism Paint Deeptones.
Prism Paint Bolds.

Sample ID Label



- The Sample ID Label Option identifies specific attributes of door and drawer front samples. Labels are low tack and easy to remove. It is intended to be replaced with your company's customized label.
- Net per door or drawer front.
- Available on doors and drawer fronts only; this option is not available on specialty or accessory products.
- ID labels are available on unfinished and finished doors and drawer fronts.
- Sample ID labels will include Conestoga nomenclature only, customization is not available.
- Each label includes: Conestoga design name, specie/grade, framing bead, raise, edge profile, selected options, finishing information and package date.
- All finished doors or drawer fronts will receive a second disclaimer label along with an ID label.

Prism Paint Fan Deck

- 1,600 colors are showcased in this comprehensive fan deck.
- Divided into five sections: Colors, Neutrals, Whites & Pastels, Timeless and Historic.
- All paints are interior grade only, including the Historic Exterior section.
- Each paint color is classified as either a Pastel, Deeptone or Bold. Each classification determines the Design Charge and material square foot cost category when finishing is requested, or DuraGuard loose paints are selected.
- Refer to the Customer Business Portal for a complete listing of paint colors and price categories.
- Prism Paints are also available with Chai, Coffee, Oyster and Pewter glazes.
- Order Prism Paint fan decks using part #2602036A.
  net per fan deck.

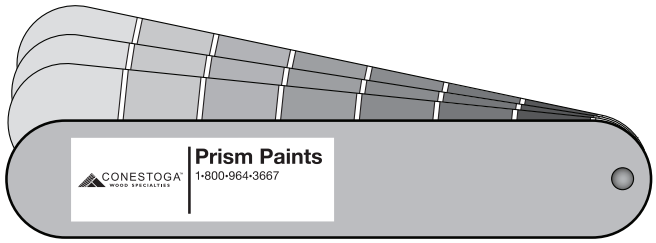

DuraGuard System Overview

DuraGuard is a complete finishing material program designed to make it easy to match Conestoga's prefinished products, in which all the base stains, Colourtones, Prism Paints, glazes, primers, sealers and topcoats work together to create a lasting finish on our customer's components.

- DuraGuard provides finishing materials, step-by-step instructions, access to our in-house finishing professionals and support products such as touch up kits.

DuraGuard System Features

- Access to all of Conestoga's topcoats, sealers, stains, paints, primers, glazes and other finishing materials.
- Every shipment of finishing material includes a label with a QR code to provide step-by-step instructions detailing how to mix raw materials, sand the wood, apply the finish and spray the topcoat.
- Access to our Finishing Department at (717) 445-3252 every business day, from 7:00 a.m. to 3:30 p.m. (EST). We are dedicated to answering any finishing questions our customers may have.
- Inexpensive touch up kits are available; these kits are used to hide scratches or blemishes incurred in our customers' shop. These kits make a great gift for your satisfied customers. See DuraGuard Packaged Finish Pricing Chart for details and pricing.

DuraGuard System Disclaimers

- Conestoga's finishes are industrial in nature, unlike finishes purchased at a retail store. Although they are of higher quality than most finishes, Conestoga's coatings are also more combustible, more volatile and require a greater level of expertise to apply.
- Due to the complexities involved with any finishing process, Conestoga will not be liable for any damages or injuries resulting from the use of this product, even if every precaution is taken by the customer. Conestoga's liability is limited to the original purchase price of the finishing material.
- In order to best match any DuraGuard finish color, it is important to follow the processes outlined in our instruction documents. These instructions are found in this section of the manual. If the proper steps are not followed, the finished product may not match the finished doors that were purchased from Conestoga. However, please bear in mind that following these procedures will not always guarantee an exact match.
- Due to the many variables involved in any finishing process, Conestoga assumes no responsibility if products finished by the customer using the DuraGuard System do not produce an exact match to prefinished products purchased from Conestoga.
- The DuraGuard Finishing System is scientifically designed so that each of the materials, from base coat to topcoat, work with one another, thereby providing a beautiful protective finish for our customer's products. Finishing products not sold by Conestoga may react unfavorably to the DuraGuard finishing materials causing poor topcoat adhesion, discoloration or other problems.

DuraGuard Finishing Support Items			
Cleaning Solvent	Quart	Gallon	5-Gallon
FT220 Lacquer Thinner	NA	NA	
Touch Up Kits*			
Wiping Stains, Truetones & Glaze Kits (net)			
Colourtones, Prism Paints & Custom Stain Kits (net)			
Colourtone Aerosol Can (net)			
Topcoat Aerosol Can - Low Sheen (net)			
Tools			
Mil Gauges (pack of 50)			

***Touch Up Kits:** Wiping stain, Truetone, Glaze and Colourtone kits include a stain marker and fil-stick. Prism Paint and Custom Stain kits include a marker and a vial of 10° sheen topcoat. Colourtone aerosol cans are 12 oz.

DuraGuard Packaged Finish Pricing

Wiping Stains	Quarts	Gallons	5-Gallons
Alpine			
Autumn			
Bordaeux			
Chestnut			
Colonial			
Cordovan			
Dark Roast			
Driftwood			
Espresso			
Ginger			
Harvest Gold			
Honey			
Nickel			
Nitefall			
Nutmeg			
Portabella			
Saddle			
Washington Cherry			
Truetone Stain			
Desert Sand			
Truetone Spray Stains (use w/ Truetone wiping stains)			
Ashen	NA		
Cocoa	NA		
Seaside	NA		
Shale	NA		
Truetone Wiping Stains (use w/ Truetone spray stains)			
Ashen			
Cocoa			
Seaside			
Shale			
Glazes			
Brown			
Caramel			
Chai			
Coffee			
Onyx			
Oyster			
Pewter			
Sable			
White			

Primers (Catalyst V66V21 required)	Quarts	Gallons	5-Gallons
White	NA		
Black	NA		
Light Grey	NA		
Medium Grey	NA		
Dark Grey	NA		
Sage	NA		
Colourtones (Catalyst V66V21 required)			
Antique White	NA		
Arctic White	NA		
Cadet Grey	NA		
Crystal White	NA		
Designer White	NA		
Ebony	NA		
Fern	NA		
Frosty White	NA		
Gunsmoke	NA		
Hearthstone Grey	NA		
Heron	NA		
Marina	NA		
Metropolitan Grey	NA		
Regent Blue	NA		
Prism Paints (Catalyst V66V21 required)			
Pastels	NA		
Deeptones	NA		
Bolds**	NA		
Sealer and Topcoats (Catalyst V66V21 required)			
Sealer	NA		
5° Topcoat	NA		
10° Topcoat	NA		
30° Topcoat	NA		
General Catalyst (use with primers, Colourtones, Prism Paint, Sealer & Topcoats)			
Catalyst V66V21			NA
Finishing Additives			
Retarder Ethyl 3-Ethoxypropionate (EEP) – (R6K35)			
	NA	NA	
Reducer Butyl Acetate (R6K18)			
	NA	NA	

Lead time for any single DuraGuard item including Stain, Colourtone, Glaze, Primer, Thinner, Catalyst, Topcoat or Sealer materials are as follows: 5 gallons or less - 3 business days. Can ship UPS or FedEx small package, Common Carrier or Conestoga Wood Transportation. 5-1/4 to 14-3/4 gallons - 5 business days. Can only ship Common Carrier or Conestoga Wood Transportation. 15 gallons or more - 8 business days. Can only ship Common Carrier or Conestoga Wood Transportation.

Custom stain match materials and Prism Paints are mixed on a per-order basis and cannot be expedited.

** Bold prices include 1 gallon of Prism Paint and 2 gallons of tinted primer.

DuraGuard Finishing Instructions

All Wiping Stains (except Bordeaux, Dark Roast, Espresso, Nickel and Nitefall)

- Use this process to match all Conestoga wiping stains except Bordeaux, Dark Roast, Espresso Nickel and Nitefall stains.
- White wood sand with an oscillating palm sander using 180 grit sandpaper.
- Apply wiping stain over wood. Wipe all surfaces clean with lint-free rag.
- Allow wiping stain to dry for a minimum of 1 hour.
- Spray sealer to approximately 4 wet mil thickness.
- When the sealer is completely dry, sand sealer with fine grit (220-280) sandpaper using an oscillating palm sander on all flat surfaces. Hand sand all profiles with 220 grit sandpaper.
- Spray on topcoat to approximately 4 wet mil thickness.
- Allow topcoat to dry for a minimum of 4 hours before handling.

Bordeaux, Dark Roast, Espresso, Nickel and Nitefall Finishing Process

- Use this process to match Conestoga's Bordeaux, Dark Roast, Espresso, Nickel and Nitefall stains.
- White wood sand with an oscillating palm sander using 180 grit sandpaper.
- Moisten wood surface by lightly misting with water. Do not over saturate. Allow wood to completely dry for 30 to 60 minutes depending on relative humidity. This will open the grain allowing penetration of stain.
- Apply wiping stain over wood. Wipe all surfaces clean with a lint-free rag.
- Allow wiping stain to dry for a minimum of 1 hour.
- Spray sealer to approximately 4 wet mil thickness.
- When sealer is completely dry, sand sealer with fine grit (220-280) sandpaper using an oscillating palm sander on all flat surfaces. Hand sand all profiles with 220 grit sandpaper.
- Spray on topcoat to approximately 4 wet mil thickness.
- Allow topcoat to dry for a minimum of 4 hours before handling.

Traditional and Soft Wipe Hand Wiped Glaze Over Wiping Stains

- Use this process to apply hand wiped glazes over all Conestoga wiping stains.
- White wood sand with an oscillating palm sander using 180 grit sandpaper.
- Apply wiping stain over wood per DuraGuard finishing instructions. Wipe all surfaces clean with lint-free rag.
- Allow wiping stain to dry for a minimum of 1 hour.
- Spray sealer to approximately 4 wet mil thickness.
- When sealer is completely dry, hand sand all surfaces using 320 grit sandpaper. Make sure to sand in same direction as the wood grain.
- Apply the glaze to the entire surface and wipe the excess glaze off with a lint-free rag, leaving the desired amount of glaze in profiled areas. After hand applying glazes, for Traditional glazes, it may be necessary to highlight profiled areas with a finely trimmed brush. Soft Wipe glazes do not receive the same highlight process. When matching existing products, make sure the same amount of glaze is left on the surface of the product being glazed as is on the product to be matched. Allow glaze to dry for 1 hour.
- Spray on topcoat to approximately 4 wet mil thickness.
- Allow topcoat to dry for a minimum of 4 hours before handling.

DuraGuard Finishing Instructions (continued)

Mixing Topcoats and Sealers

Follow this process when using DuraGuard topcoats and sealers to match products finished by Conestoga.

- Always use a lined can or plastic container when adding catalyst. Do not catalyze in an unlined metal can.
- Slowly pour the pre-measured container of catalyst into the gallon container of sealer or topcoat. Thoroughly agitate topcoat material, making sure there is no residue on the bottom of the can. Agitation must be continuous. **Do not over catalyze!**
- Once the catalyst has been added, the chemical interaction of the mixture results in a 24 hour “pot life”. After this 24 hour time frame, the mixture begins to cure rendering it unusable.
- Catalyst ratios are listed below.
- We strongly recommend against attempting to extend the pot life of sealer or topcoat by adding virgin material, as it will disrupt the catalyst ratio.
- Spray topcoat to a thickness of 4 wet mils.

Topcoat/Sealer	Amount of Catalyst
Conversion Varnish Products	
Sealer	4.0 ounces of catalyst V66V21 per gallon
10° (low sheen) topcoat	4.0 ounces of catalyst V66V21 per gallon
30° (medium sheen) topcoat	4.0 ounces of catalyst V66V21 per gallon

Topcoat Application Guidelines

- All standard hand wiped and Truetone stains default to 10° topcoat; 30° topcoat available upon request.
- All standard hand wiped and Truetone stains with glazes default to 10° topcoat; 30° topcoat available upon request.
- All weathered grain products finished with wiping stains, wiping stains with glazes, Colourtones and Colourtones with glazes default to 5° topcoat; 10° topcoat available upon request. 30° topcoat not available with weathered grain products.
- Antiquing, distressing and wear sanding options selected with wiping stains and wiping stains with glazes default to 10° topcoat; 30° topcoat is available upon request.
- Antiquing, distressing and wear sanding options added to Colourtone, Colourtone with glaze, Prism Paint or Prism Paint with glaze default to 10° topcoat. 30° topcoat not available with any of these finish and option combinations.

DuraGuard Finishing Instructions (continued)

Truetones - Low Complexity

Use this process to match Conestoga's Low Complexity Truetone finishes.

- White wood sand with an oscillating palm sander using 180 grit sandpaper.
- Using spray equipment apply Truetone stain material over wood with even wet coats until the desired color is achieved. **(Diaphragm pump and HVLP gun recommended for spray application)**.
- Allow stain to dry for a minimum of 30 minutes.
- Spray sealer to approximately 4 wet mil thickness.
- When the sealer is completely dry, sand sealer with fine grit (220-280) sandpaper using an oscillating palm sander on all flat surfaces. Hand sand all profiles with 220 grit sandpaper.
- Spray on topcoat to approximately 4 wet mil thickness.
- Allow topcoat to dry for a minimum of 4 hours before handling.

Truetones - High Complexity

Use this process to match Conestoga's High Complexity Truetone finishes.

- White wood sand with an oscillating palm sander using 180 grit paper.
- Apply the Truetone wiping stain as the base color over wood. Wipe all surfaces clean with a lint-free rag.
- Allow the Truetone wiping stain to dry for a minimum of 1 hour.
- Using spray equipment apply the matching Truetone spray stain material over the wiping stain with multiple light passes until uniform coverage is achieved. It may take as many as 4 to 6 light passes spraying in opposite directions to get uniform coverage on the board surface. DO NOT apply heavy wet coats as this may cause modeling and blotchiness in the spray stain. **(Diaphragm pump and HVLP gun recommended for spray application)**.
- Allow the spray stain to dry for a minimum of 30 minutes.
- Spray sealer to approximately 4 wet mil thickness.
- When the sealer is completely dry, sand sealer with fine grit (220-280) sandpaper using an oscillating palm sander on all flat surfaces. Hand sand all profiles with 220 grit paper.
- Spray topcoat to approximately 4 wet mil thickness.
- Allow topcoat to dry for a minimum of 4 hours before handling.

Traditional Hand Wiped Glaze Over Truetones

Use this process to apply hand wiped glaze over all Conestoga Truetones.

- Follow application instructions for desired Truetone finish.
- Allow Truetone to dry for a minimum of 30 minutes.
- Spray sealer to approximately 4 wet mil thickness.
- When sealer is completely dry, hand sand all surfaces using 320 grit sandpaper. Make sure to sand in same direction as the wood grain.
- Apply the hand wiped glaze to the entire surface and wipe the excess glaze off with a lint-free rag, leaving the desired amount of glaze in profiled areas. When matching existing products, make sure the same amount of glaze is left on the surface of the product being glazed as is on the product to be matched.
- Allow glaze to dry for a minimum of 1 hour.
- Spray on topcoat to approximately 4 wet mil thickness.
- Allow topcoat to dry for a minimum of 4 hours before handling.

DuraGuard Finishing Instructions (continued)

Colourtones and Prism Paints

Colourtones/Prism Paints are two-part, acid catalyzed, opaque basecoats, high in solids and match paint in appearance. Colourtone/Prism Paint finishing materials are non-catalyzed when purchased and must have catalyst purchased separately and added prior to application. These coatings are very durable and resistant to moisture.

Colourtones, Prism Paints and Catalyzation

Colourtone/Prism Paint finishing materials have superior film build, adhesion, excellent sanding properties and moisture resistance. It is extremely important to keep these materials thoroughly agitated while spraying. Coatings require the addition of an acid catalyst in order to cure. Since the catalyst has corrosive properties, neither the catalyst nor the catalyzed material should ever be stored in an unlined metal container. Thoroughly agitate material prior to the addition of catalyst. Add only the recommended ratio of catalyst and continue agitation for 5 minutes prior to spraying the material. **Do not over catalyze!** After catalyzation, material will have a maximum pot life of 24 hours.

Colourtone/Prism Paint materials have a limited amount of time between the application of the first and second coats and the application of topcoat. In order to achieve the proper chemical bond between coats, topcoat must be applied within 24 hours after applying the second coat. This time frame remains the same for both glazed and non-glazed products. The Colourtone/Prism Paint systems require a 10° conversion varnish topcoat. The use of any other topcoat material may result in lifting, discoloration, poor adhesion, cracking, poor moisture resistance and other finish related problems. Conestoga recommends the use of the DuraGuard glazes and topcoat in combination with Colourtone/Prism Paint finishing materials.

Surface Preparation for Colourtones and Prism Paints

- Fill all open voids with wood putty, sanding off excess putty.
- Sand surface of product with an oscillating palm sander using 180 grit sandpaper.

Spraying Colourtones, Prism Paints (Pastels and Deeptones)

- Thoroughly agitate Colourtone/Prism Paint material, add catalyst while material is under agitation. Add 4 ounces catalyst V66V21 to 1 gallon of Colourtone/Prism Paint in a lined metal can or plastic container. Pot life after catalyzation is 24 hours. Keep material under constant agitation.
- Spray Colourtone/Prism Paint material to a thickness of 4 wet mils.
- Allow first coat of material to dry for a minimum of 2 hours.
- Sand the entire surface with 280 grit sandpaper.
- Spray a second Colourtone/Prism Paint coat to a thickness of 4 wet mils.
- Allow the second coat to dry 2 hours before applying glaze or topcoat. A topcoat must be applied within 24 hours, whether product is glazed or unglazed.
- Allow topcoat to dry for a minimum of 4 hours before handling.

Bold Prism Paints

Conestoga's Bold Prism Paints differ from Pastel and Deeptone Prism Paints in that they require a specially tinted primer custom mixed per individual Bold Prism Paint color. In addition to the tinted primer material, a second coat of tinted primer must be applied prior to the Bold Prism Paint application. The result is a deep, consistent color that is durable and repeatable.

Surface Preparation for Tinted Primers

- Fill open voids with wood putty, sanding off excess putty.
- Sand surface of product with an oscillating palm sander using 180 grit sandpaper.

Spraying Tinted Primers for Bold Prism Paints

- Thoroughly agitate tinted primer material, ensuring there is no residue on the bottom of can. Add catalyst while the tinted primer is under agitation in a lined metal can or plastic container.

DuraGuard Finishing Instructions (continued)

- Add 3 ounces of catalyst V66V21 to 1 gallon of tinted primer. Pot life after catalyzation is 24 hours. Keep material under constant agitation.
- Spray tinted primer to a thickness of 5 wet mils.
- Allow the first coat of tinted primer to dry for a minimum of 1 hour before sanding.
- When thoroughly dry, sand the entire surface with 280 grit sandpaper.
- Apply the second coat of tinted primer to a thickness of 5 wet mils.
- Allow second coat of tinted primer to dry for a minimum of 1 hour before sanding.
- When thoroughly dry, sand the entire surface with 280 grit sandpaper.

Spraying Bold Prism Paint

- Thoroughly agitate Bold Prism Paint material. Add catalyst while material is under agitation in a lined metal can or plastic container.
- Add 4 ounces catalyst V66V21 to 1 gallon of Bold Prism Paint. Pot life after catalyzation is 24 hours. Keep material under constant agitation.
- Spray Bold Prism Paint material to a thickness of 4 wet mils.
- Allow coat of Bold Prism Paint to dry from a minimum of 2 hours before applying glaze or topcoat. A topcoat must be applied within 24 hours, whether product is glazed or unglazed.
- Allow topcoat to dry for a minimum of 4 hours before handling.

Traditional Hand Wiped Glaze over Colourtones and Prism Paints

- Apply the glaze to all surfaces after the second coat of Colourtone/Prism Paint is fully dry. Glaze may be applied with a rag and/or a brush.
- Wipe glaze off surfaces immediately using a “selective” wiping technique, leaving behind the desired amount of glaze in the profiled and flat areas. If matching to Conestoga prefinished products, ensure that the same amount of glaze is left in profiled areas and flat surfaces as on the Conestoga product.
- Allow glaze to dry for 1 hour.
- Spray with Conestoga’s DuraGuard 10° sheen conversion varnish topcoat to a thickness of 4 wet mils. A topcoat must be applied within 24 hours, whether product is glazed or unglazed.
- Allow topcoat to dry for a minimum of 4 hours before handling.

Topcoat over Colourtones and Prism Paints

- Thoroughly agitate topcoat material, ensuring there is no residue on bottom of can.
- Add 4 ounces of catalyst V66V21 per gallon of 10° sheen topcoat in a lined metal can or plastic container and agitate for 5 minutes prior to spraying. Keep topcoat under constant agitation. After catalyzation, the material has a 24 hour pot life. We do not recommend extending pot life by adding virgin material, as this will disrupt your catalyst ratio.
- Spray 4 wet mils of topcoat over Colourtone/Prism Paint.
- Allow topcoat to dry for a minimum of 4 hours before handling.

Antiquing on Colourtones and Prism Paints

Antiquing is a process to create the appearance that portions of the finish and even some of the substrate have been worn away from prolonged daily use.

- After allowing the Colourtone/Prism Paint material to thoroughly dry, the entire piece must be sanded with an oscillating palm sander using 280 grit sandpaper. Randomly sand through both coats of finish to expose the raw wood on profiled areas, edges and corners to simulate an aged, worn appearance. If antiquing is used in combination with the wear sanding option, follow the areas previously wear sanded. The amount and location of the antiquing should vary by personal preference, but should be focused on areas that would typically show wear from daily use. Refer frequently to the antiqued sample door finished by Conestoga.

DuraGuard Finishing Instructions (continued)

Colourtone Touch Up Aerosol

This aerosol can is for minor touch up only and is not formulated to be used as a Colourtone paint substitute. Light scuff sanding of the defective area with a 320 grit sponge is recommended prior to spray application for increased adhesion. This product is not a final topcoat and must receive a coat of clear surface repair lacquer to match sheen and ensure durability.

Surface Preparation: Surface should be clean and dry. Remove dirt, grease, oil, wax and loose paint.

For instructions on the use of touch up aerosol, see directions printed on can label: Use outdoors or in a well ventilated area when temperature is between 68° to 78°F (20° to 26°C) and humidity is below 60% to ensure proper drying. Mask surrounding area where over spray might settle. Shake can for at least one minute, listening for rattle of mixing ball. Shake for 10 seconds at 1-2 minute intervals during application. Hold can 6 to 10 inches from surface. Press spray button firmly. Do not cover with continuous spray. Move back and forth releasing spray head after each stroke. Overlap each stroke. Apply two thin coats rather than one heavy coat.

Clean up: If spray button becomes clogged, pull off and clean with solvent.

Primers (Standard Primer Process)

Conestoga's primers are available in white, light grey, medium grey, dark grey, black and sage and are post catalyzed, acid cured primers, compatible with many high quality topcoats. While there are many topcoats available on the market today, Conestoga recommends only acid cured, pigmented conversion varnishes.

Surface Preparation for Primers

- Fill all open voids with wood putty, sanding off excess putty.
- Sand surface of product with an oscillating palm sander using 180 grit sandpaper.

Spraying Primers

- Thoroughly agitate primer materials, ensuring there is no residue on bottom of can. Add catalyst while the primer is under agitation in a lined metal can or plastic container.
- Add 3 ounces catalyst V66V21 to 1 gallon of primer. Pot life after catalyzation is 24 hours. Keep material under constant agitation.
- Spray primer to a thickness of 5 wet mils.
- Allow primer to dry for a minimum of 1 hour before sanding.
- Sealer sand the entire surface with 280 grit sandpaper prior to applying a color coat.

Pinstripe Glaze Process over Colourtones and Prism Paints

After applying your desired Colourtone or Prism Paint follow this process to apply Pinstripe glaze.

- Select your desired glaze color (Coffee, Pewter or Onyx).
- Using a finely trimmed 1" paint brush or a fine artist brush, apply glaze lines to the deep profiled areas of your doors and drawer fronts.
- Only apply the lines to the profiled areas on the face and edges of the components. Do not apply glaze to any other surface areas.
- It is not necessary to apply any glaze to sheet stock, refacing stock, cabinet parts or any other products that do not have a deep profile for glaze to hang.
- Should any glaze accidently get applied to non-glazed areas, use mineral spirits to remove excess glaze and clean areas around the Pinstripe lines where glaze may have smeared or smudged.
- Allow glaze to dry for a minimum of 1 hour.
- All Pinstripe glazes on Colourtones or Prism Paints require a coat of DuraGuard 10° sheen conversion varnish topcoat applied to a thickness of 4 wet mils within 24 hours.
- Allow topcoat to dry a minimum of 4 hours before handling.

DuraGuard Finishing Instructions (continued)

Pinstripe Glaze Process over Wiping Stains

After applying your desired Wiping Stain, follow this process to apply Pinstripe glaze.

- Spray sealer to approximately 4 wet mil thickness.
- When sealer is completely dry, hand sand all surfaces using 320 grit sandpaper. Make sure to sand in same direction as wood grain.
- Select your desired glaze color (Brown, Caramel, Pewter or Sable).
- Using a finely trimmed 1" paint brush or a fine artist brush, apply glaze lines to the deep profiled areas of your doors and drawer fronts.
- Only apply the lines to the profiled areas on the face and edges of the components. Do not apply glaze to any other surface areas.
- It is not necessary to apply any glaze to sheet stock, refacing stock, cabinet parts or any other products that do not have a deep profile for glaze to hang.
- Should any glaze accidently get applied to non-glazed areas, use mineral spirits to remove excess glaze and clean areas around the Pinstripe lines where glaze may have smeared or smudged.
- Allow the glaze to dry for a minimum of 1 hour.
- All Pinstripe glazes on Wiping Stains require a coat of DuraGuard 10° sheen conversion varnish topcoat applied to a thickness of 4 wet mils within 24 hours.
- Allow topcoat to dry a minimum of 4 hours before handling.

Additional DuraGuard Supplements

In addition to the core stains, primers, paints, glazes, sealers, topcoats, catalysts and touch-up materials, Conestoga's DuraGuard program provides additional materials to assist in the finishing process.

- FT220 Thinner is a clean-up solvent used for flushing lines and equipment.
- Reducer-Butyl Acetate is a solvent which can be used to lower viscosities in topcoats, primers and paints. This product should never be added to stains or glazes.
- Retarder-Ethyl 3-Ethoxypropionate (EEP) is a solvent that can be used to decrease the dry time in topcoats, primers and paints. This solvent can be used in humid environments to improve clarity and reduce blushing. This product should never be added to stains or glazes.
- A Mil Gauge measures the thickness of topcoats, primers and paints. This plastic disposable tool has graduating notches, with each notch (1 mil) representing one-thousandth of an inch. Placing the gauge vertically into the wet coating allows the user to see which portion of the gauge leaves an impression in the coatings surface. In so doing, identifying a coatings thickness with accuracy.

DuraGuard Finishing Instructions (continued)

Legal Disclaimers

- DuraGuard finishes are industrial in nature, unlike finishes purchased at a retail store. Although DuraGuard offers a higher quality finish than most finishes, it also is more combustible, more volatile and requires a higher level of expertise to apply. Due to the complexities involved with any finishing process, Conestoga will not be liable for any damages or injury resulting from the use of this product, even when the customer has taken precautions. Conestoga's liability is limited to the original purchase price of the finishing material.
- In order to best match any DuraGuard finish color, it is important to follow the preperation and application processes outlined on the previous pages. If these steps are not followed, your finished product may not match the products purchased from Conestoga. However, please bear in mind that following these procedures will not always guarantee an exact match. Due to the many variables involved in any finishing process, Conestoga assumes no responsibility if products that are finished by the customer using the DuraGuard System are not an exact match to the finished products sold by Conestoga.

Important Note: All drying times mentioned in this document are to be used as guidelines only. The actual drying time will vary according to the climate in which the finish is applied.

- The DuraGuard finish system is scientifically designed so that each of the materials, from basecoat or stain, to topcoat, work with one another, thereby providing a beautiful protective finish for your wood products. Finish materials not sold by Conestoga may react unfavorably with DuraGuard finishing materials causing poor topcoat adhesion, discoloration or other problems.
- Color variation can occur on separately ordered jobs. Conestoga cannot guarantee color matches on material ordered at different times. Length of time between orders may also be a factor affecting color variation. Environmental factors where existing material is stored or installed may affect finished products to the degree of causing an appearance different to that of a newly finished product. To better ensure consistency of appearance, Conestoga recommends against placing partial orders.

Health and Safety Information

Refer to SDS for health and safety information. Log on to www.conestogawood.com/sds for 24 hour access to SDS information.

Care and Cleaning of Fine Kitchen Cabinetry

- The DuraGuard topcoat offers the utmost protection for kitchen cabinet applications and provides superior chemical and common kitchen stain resistance while maintaining color and sheen.
- DuraGuard topcoats require minimal care and cleaning. We recommend periodic cleaning with a mild detergent and water solution to remove dirt, dust and grease that buildup with routine usage. Dampen a soft, non-abrasive cloth and wipe entire exterior surface of cabinetry and dry with a soft cloth. Never use a wet cloth that allows water to run down the cabinetry and always dry cabinetry immediately if water or other liquids are spilled onto the surface.
- Care should be taken not to use abrasive cleansers, ammonia or any other type of harsh chemical. These cleaning agents may cause discoloration, scratching, marring and dulling of the finish. We also discourage use of furniture polishes and waxes on finished cabinetry. Furniture polishes alter the original sheen level and may leave a film on the surface that attracts dust and dirt. These polishes may also cause an irregular or blotchy appearance because they are unable to stand up to many common kitchen stains.

Customer Supplied Parts for Finishing

- Conestoga's premium finishes are available on wood and MDF components not currently supplied by Conestoga through our Customer Supplied Products (CSP) program. While limited to products not currently available from Conestoga, the program is subject to size restrictions. Range hoods, assembled cabinetry and products supplied by direct competitors to Conestoga will be considered, but Conestoga reserves the right to refuse to finish any item.

Maximum Size Parameters (thickness x width x length)		
Mouldings	**Plywood**	**Misc. Parts**
2" x 12" x 144"	3/4" x 30" x 96"	15" x 36" x 96"

- Conestoga utilizes the standard finishing processes outlined in the Finishing Program Section to finish all customer supplied items. Parts submitted for finishing should be in finish ready condition and it is assumed that all parts will be in such condition that our standard finish processes and materials will produce the desired finished appearance.
- Additional charges will apply for those parts received that require additional labor such as puttying, sanding, and repair. Conestoga reserves the right to reject parts that are not in finish ready condition or that may contain materials that pose a contamination threat to our operation.
- For standard species, the CSP finish selection is limited to Recommended and Not Recommended offerings listed in the finishing Offering and Availability Chart.
- Stain and glaze finish topcoat glosses are 10° or 30° sheen. Paint or paint with glaze finishes are available with 10° sheen topcoat only.
- Parts having machining defects, material defects, or poor sanding will produce less desirable results than parts that have been properly prepared for finishing and will likely have a different finished appearance than accompanying items. Appearance variations of CSP products are not considered defective.
- It is likely that CSP exotic or non-domestic species will not match components manufactured and finished by Conestoga.
- It is assumed that parts shipped directly to Conestoga from vendors are the correct parts and will be processed as such. Conestoga will not be responsible for any shipping errors, delays or damages incurred on CSP parts.
- Customer is responsible for shipping these parts to Conestoga. Due to our truck routes and backhauls, customer supplied parts cannot be shipped to Conestoga on Conestoga trucks.
- All CSP shipped to Conestoga must include the appropriate sales order number provided by Conestoga.
- Standard finishing lead-times apply and will begin when part has been received, inspected and found to be in finish-ready condition and a customer approved quote is on file.
- CSP items cannot be expedited through the finishing process. Orders consisting of multiple parts or involving preparation labor may require additional lead-time.
- Contact Special Designs or your Sales Representative to properly complete the Request For Finish Quote Order Form found on the following page.

Customer Supplied Parts for Finishing

Customer Name:	Page: of	Order Date:
Ship To:	Customer #:	
	PO #:	
	Shipping Instructions:	
Attention:		
Phone #:		

Description of part to be finished:

Quantity: | Size: Length _____ Width _____ Height _____

Specie:	Options:
☐ Stain color _____	
☐ Colourtone color _____	☐ Photo included ☐ Drawing Included
☐ Prism Paint color/code _____	Manufacturer:
☐ Glaze color _____ ☐ Traditional ☐ Soft Wipe ☐ Pinstripe	Manufacturer's part number:

Topcoat Sheen ☐ 10° ☐ 30°

Special Instructions/Sketch:

Disclaimer

I verify that I have read, understand and agree to the terms and conditions on finishing parts supplied by customer on page 8.35 of the Custom Product Manual. Customer supplied parts being sent to Conestoga cannot be transported on Conestoga trucks.

Signature _____ Date _____

Failure to sign and return this document could delay the processing of your quote.

Customer Wiping Stain Match

Customer Name:	**Page:** of	**Order Date:**
Ship To:	**Customer#:**	
	PO#:	
	Shipping Instructions:	
Attention:		
Phone #:		
Specie:	**Grade:**	
Stain Color:	**Glaze Color:**	
Sheen: ☐ 10° ☐ 30°	☐ Traditional ☐ Soft Wipe ☐ Pinstripe	

Special Instructions:

Disclaimer

I verify that I have read, understand and agree to the terms and conditions on wiping stain match by customer on page 8.2-8.3 of the Custom Product Manual. Customer supplied wiping stain match being sent to Conestoga cannot be transported on Conestoga trucks.

Submitted by:_____ **Date:** _____

Failure to sign and return this document could delay the processing of your quote.

Moulding Program

Conestoga offers several different moulding programs for your convenience.

Program Selection	Species	Grade	Minimum Order Quantity	Maximum Order Quantity	Lead-Time, Days
8 ft. Standard Profiles	Stock	Choice	1 piece	25 pieces*	3
	Non-stock	Choice	1 piece	None	10
12 ft. Standard Profiles	Non-stock	Choice	1 piece	None	10
8 ft. Non-standard and Special Order Profiles	Any	Choice	1 piece**	None	10
12 ft. Non-standard and Special Order Profiles	Any	Choice	1 piece**	None	10
Random Length Cabinet Framing/S4S	Any	Prime	100 ft.	None	10

*Maximum stock order per specific profile and specie is 25 pieces. Orders exceeding 25 pieces require 10 day lead-time.
**Non-standard profile orders of less than 100 lineal feet will incur a net set-up charge.

Solid Wood Moulding Specifications

- Eight foot standard and non-standard mouldings will be shipped 94" to 97" in length.
- Twelve foot standard and non-standard mouldings will be shipped 142" to 146" in length.
- Natural specie characteristics that exhibit the character and beauty of wood will be evident on mouldings. These characteristics will include, but not be limited to, color variations, heartwood, sapwood, pin knots, worm holes and surface and end checks. Conestoga specifications do not allow these characteristics to affect structural integrity of the mouldings.
- Natural characteristics that become evident through machining, environmental or atmospheric conditions such as minor bows, twists and crooks, may be evident but will not affect product quality or impede workability. Machining marks may be evident, but will not affect structural integrity. Moulding profiles 3-1/2" or larger may have at least one glue joint running the length of the piece.
- Solid wood mouldings utilize “Choice” grade material as defined below. Mouldings are classified differently than our door/drawer front wood grading of Premium and Standard grades. Moulding grade refers to the usability of the lumber.
  - **Choice** – All moulding programs utilize Choice grade material. Each piece will exhibit similar material quality characteristics on the face of the moulding that we offer on our Standard grade doors. Ends will be trimmed. Depending on profile depth and specie ordered, sapwood or heartwood may appear on the moulding face. This is our highest grade for mouldings.
- MDF Mouldings - Produced from TSCA/CARB2 compliant MDF, these mouldings are ideal for high humidity or arid conditions as they are resistant to expansion, contraction, warping and twisting. Available raw, primed and painted.

CONESTOGA™ WOOD SPECIALTIES

8 Foot Standard Moulding Pricing and Availability (All pricing per 8 ft. piece)

Design and Profile	Size	Alder	Bamboo	Birch, Red	Birch, White	Cherry	Hickory	Maple, Hard	Maple, Soft	MDF	Oak, Red	Oak, White	PG Hard Maple	Pine, Clear	Walnut
Crown 6								*					*		
Crown 24						*		*	*				*		
Crown 33										NA			*		
Crown 619			NA					*					*		
Crown 1238										NA			*		
Crown 1550										NA			*		
Cove Crown 1524			NA					*				*	*		
Large Cove Crown 2618			NA							NA			*		
Crown 2324			NA					*		NA			*		
Crown 2325			NA					*					*		
Crown 801 w/ mounting plate			NA					*		NA			*		
Shaker Crown 1126 w/ mounting plate										NA			*		
Crown 342			NA	NA						NA					
Crown 343			NA	NA						NA					
Reverse Shaker Crown 1529								*					*		
Crown 2584										NA			*		
Crown 2777			NA							NA					
Mounting Plate 384			NA							NA			*		
Mounting Plate 470			NA							NA			*		

- Size is nominal. Actual 8 foot length is between 94" and 97".
- Maximum stock order per specific profile and specie is 25 pieces. Additional pieces add 10 days to lead-time.
- When ordering dual-side profile products, specify “Face Side A” or “Face Side B”. See the individual drawings in this section for size and profile specifications details.
- All mouldings can be ordered finished “Face Only” or finished “Face and Back”.
- See Finishing Program Section for pricing details.
- Many carriers have oversize package surcharges for packages exceeding 96" in length. 8' mouldings are subject to these surcharges. These surcharges do not apply if delivered on a Conestoga truck.
- A Moulding Cut-Down Option is available, which trims the moulding to 90" in length.

Key

- **Non-stock item 10 day lead-time.**
- *** Stock item–3 day lead-time/2 day red expedite (20% upcharge).**
- **NA Not available**

8 Foot Standard Moulding Pricing and Availability (All pricing per 8 ft. piece)

Design and Profile	Size	Alder	Bamboo	Birch, Red	Birch, White	Cherry	Hickory	Maple, Hard	Maple, Soft	MDF	Oak, Red	Oak, White	PG Hard Maple	Pine, Clear	Walnut
Reversible Frieze 345	4-1/2"														
Light Rail B11	1-1/2"														
Light Rail 361	1-1/4"														
Light Rail 2380 w/mounting plate	1-3/4"														
Scribe 1809	13/16"														
Scribe 14	1-1/4"														
Scribe 2316	5/8"														
Scribe 2317	4"														
Batten 13	1-1/4"														
Quarter Round 1329	3/4"														
Shoe Moulding 583	3/4"														
Inside Corner Cove 11	3/4"														
Outside Corner 12	3/4"														
Refacer's Corner 2322	7/8"														
Colonial Base 10	4-1/2"														
Beaded Base 381	4-1/2"														
Base Moulding 897	3-1/2"														
Base Moulding 898	5-1/2"														
Beaded Panel B09	3-1/4"														

Key	
	Non-stock item 10 day lead-time.
*	Stock item–3 day lead-time/2 day red expedite (20% upcharge).
NA	Not available

CONESTOGA™ WOOD SPECIALTIES

8 Foot Standard Moulding Pricing and Availability (All pricing per 8 ft. piece)

Design and Profile	Size	Alder	Bamboo	Birch, Red	Birch, White	Cherry	Hickory	Maple, Hard	Maple, Soft	Oak, Red	Oak, White	PG Hard Maple	Pine, Clear	Walnut
Half Round Rope	3/4"	NA	NA	NA	NA		NA					NA	NA	NA
	1-1/2"	NA	NA	NA	NA		NA		NA	NA	NA	NA	NA	NA
Egg & Dart	1"	NA	NA	NA	NA		NA		NA		NA	NA	NA	NA
	1-1/2"	NA	NA	NA	NA				NA	NA	NA	NA	NA	NA
Dentil	7/8"	NA	NA	NA	NA		NA		NA		NA	NA	NA	NA
	1-1/2"	NA	NA	NA	NA		NA		NA	NA	NA	NA	NA	NA
Half Round Plain	1-1/2"	NA	NA	NA	NA		NA		NA	NA	NA	NA	NA	NA
Half Round Reeded	1-1/2"	NA	NA	NA	NA		NA		NA	NA	NA	NA	NA	NA

- Size is nominal. Actual 8 foot length is between 94" and 97".
- Maximum stock order per specific profile and specie is 25 pieces. Additional pieces add 10 days.
- When ordering dual-side profile products, specify “Face Side A” or “Face Side B”. See the individual drawings in this section for size and profile specifications details.
- All mouldings can be ordered finished “Face Only” or finished “Face and Back”.
- See Finishing Program Section for pricing details.
- Many carriers have oversize package surcharges for packages exceeding 96" in length. 8' mouldings are subject to these surcharges. These surcharges do not apply if delivered on a Conestoga truck.
- A Moulding Cut-Down Option is available, which trims the moulding to 90" in length.

Key

- **Non-stock item 10 day lead-time.**
- ***** — **Stock item–3 day lead-time/2 day red expedite (20% upcharge).**
- **NA** — **Not available**

12 Foot Standard Moulding Pricing and Availability (All pricing per 12 ft. piece)

Design and Profile	Size	Cherry	Maple, Hard	PG Hard Maple
Crown 6	2-9/16"			
Crown 24	4-5/16"			
Crown 33	1-9/16"			
Crown 619	3-3/8"			
Crown 1238	4-5/8"			
Crown 2325	5-1/2"			
Crown 801 w/mounting plate	3-9/16"			
Large Cove 1524	3-13/16"			
Reverse Shaker Crown 1529	3-5/8"			
Reverse Frieze 345	4-1/2"			
Light Rail B11	1-1/2"			
Scribe 14	1-1/4"			
Colonial Base 10	4-1/2"			
Beaded Base 381	4-1/2"			

- Longer lengths for applications that require continuous runs with few or no joints.
- 12' Standard mouldings will be shipped 142" – 146" in length.
- These mouldings exceed the maximum length limitations of both FedEx and UPS ground shipments. They will ship by common carrier and minimum LTL freight rates will apply.
- Many carriers have instituted oversize package surcharges. 8' and longer mouldings are subject to these surcharges. These surcharges do not apply if delivered on a Conestoga truck.
- All profiles are a non-stock item. Requires 10 day lead-time.
- See Finishing Program Section for pricing details.

Crown Mouldings

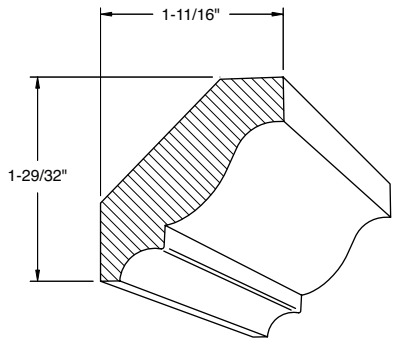

Crown 6

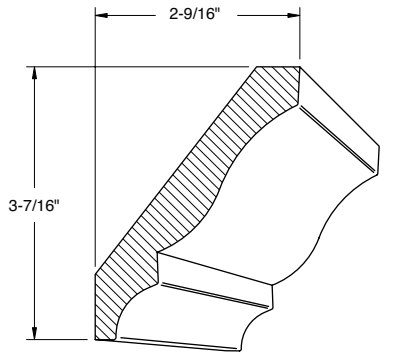

Crown 24

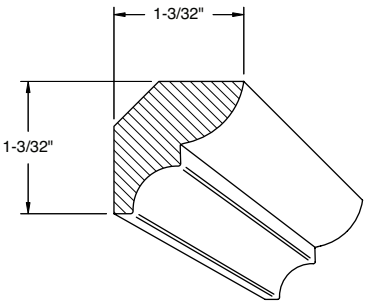

Crown 33

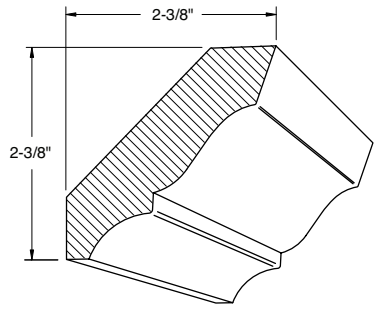

Crown 619

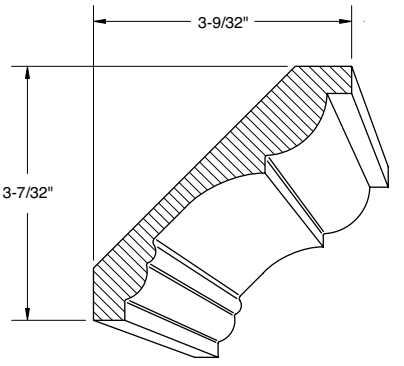

Crown 1238

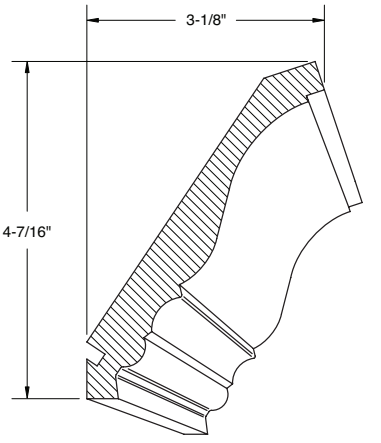

Crown 1550*

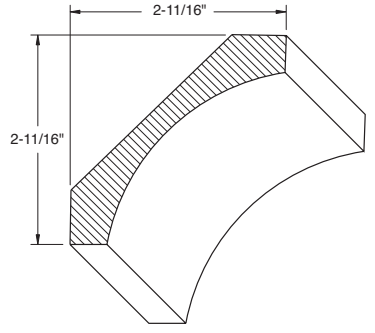

Large Cove 1524

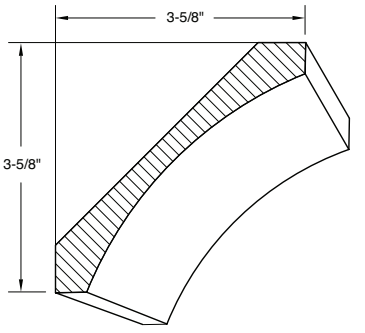

Large Cove 2618

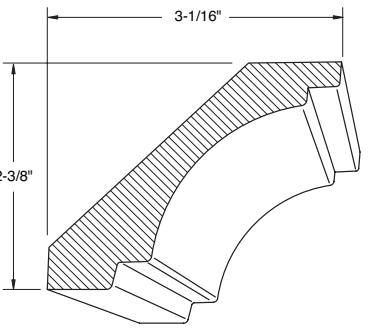

Crown 2324

* Crown moulding 1550 will accommodate Mounting Plate 384.
Note: Drawings not to scale.

Crown Mouldings (continued)

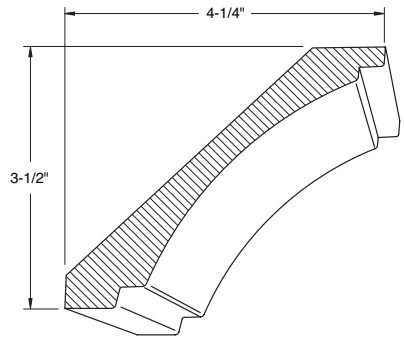

Crown 2325

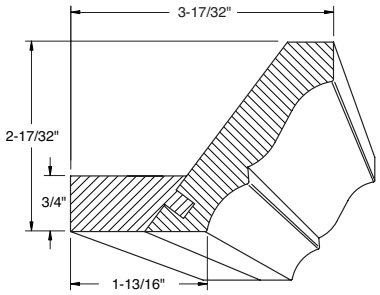

Crown 801*
w/mounting plate

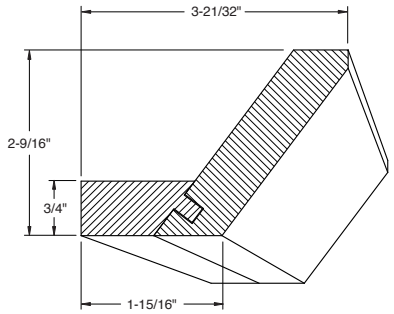

Shaker Crown 1126*
w/mounting plate

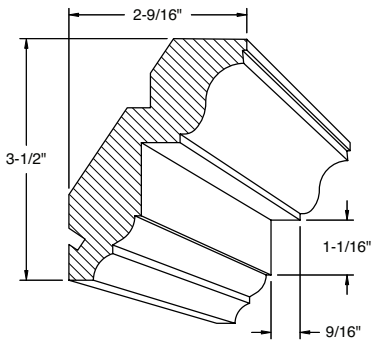

Crown 342**

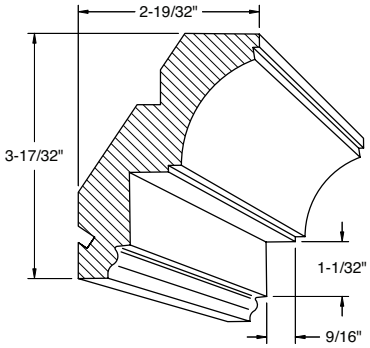

Crown 343**

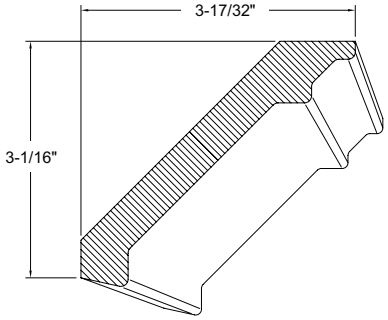

Crown 2777

* Crown 801 and Shaker Crown 1126 will be manufactured with a Paint Grade Hard Maple mounting plate, additional species available through Special Designs.
** Crown mouldings 342 and 343 will accommodate mounting plate 384 and 3/4" Rope, 7/8" Dentil and 1" Egg & Dart.
Note: Drawings not to scale.

Crown Mouldings (continued)

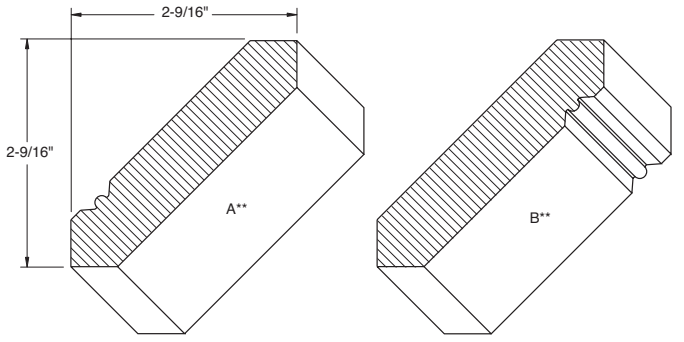

Reverse Shaker Crown 1529 †

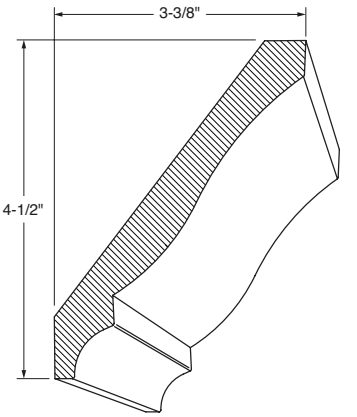

Crown 2584

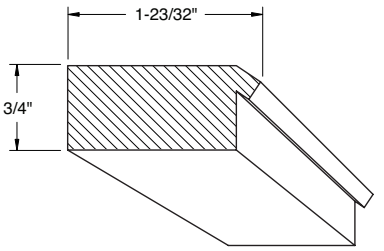

Crown Mounting Plate 384

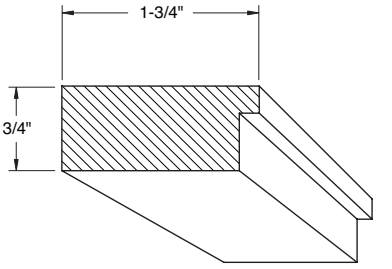

Frieze Mounting Plate 470

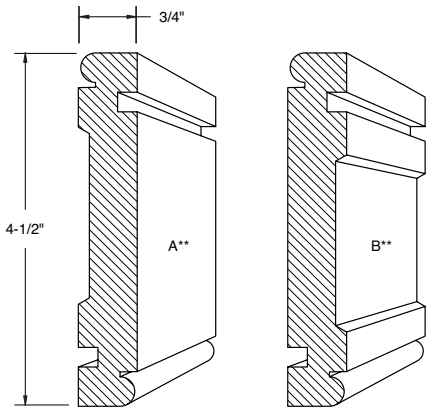

Reversible Frieze 345*†

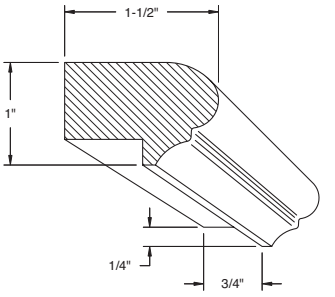

Light Rail B11

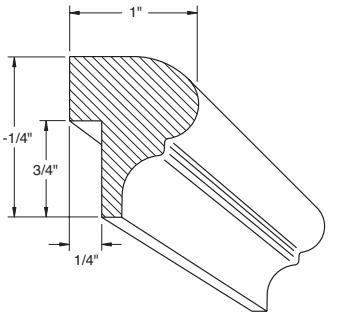

Light Rail 361

* Reversible Frieze 345 will accommodate Mounting Plate 470.

† When ordering dual side profile product, specify “Face side A” or “Face side B”. When ordering prefinished product, specify “Finish side A” or “Finish side B”.

Note: Drawings not to scale.

Trim and Accent Mouldings

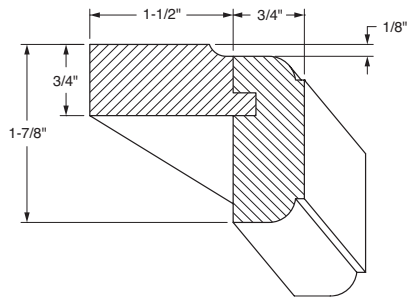

Light Rail 2380*
w/mounting plate

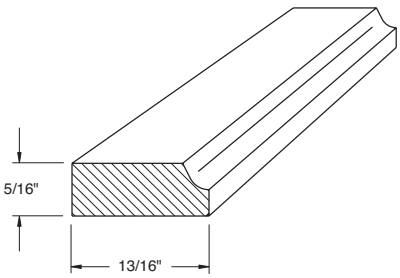

Scribe 1809

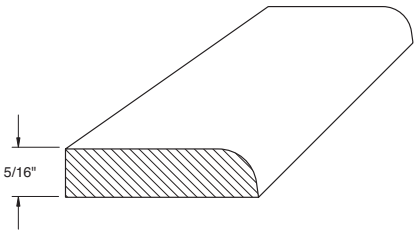

Scribe 14 (1-1/4" wide)
Scribe 2316 (5/8" wide)
Scribe 2317 (4" wide)

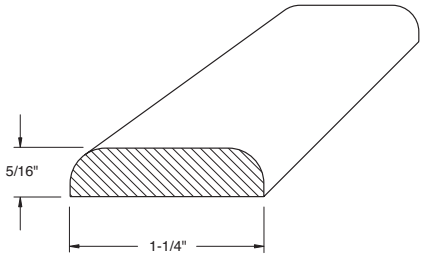

Batten 13

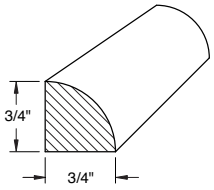

Quarter Round 1329

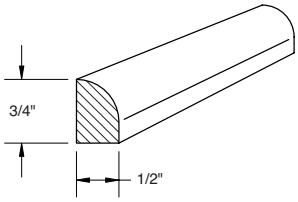

Shoe Moulding 583

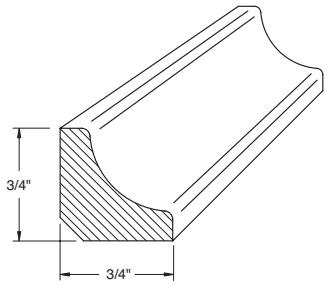

Inside Corner Cove 11

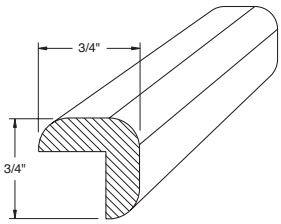

Outside Corner 12

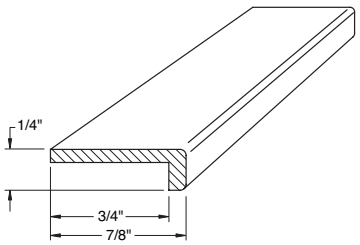

Refacer's Moulding 2322

* Light Rail 2380 is manufactured with matching specie mounting plate. Option to choose edge profile to be applied to top and bottom. All published edge profiles available except B, C, FP, L-034, L-253, L-304 and L-686.

Note: Drawings not to scale.

Trim and Accent Mouldings (continued)

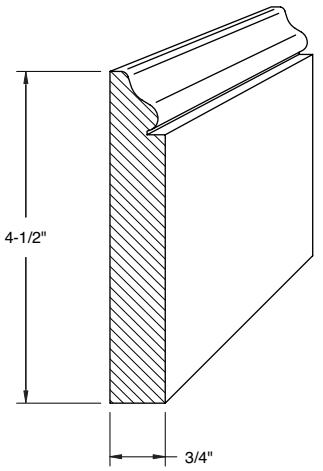

Colonial Base 10

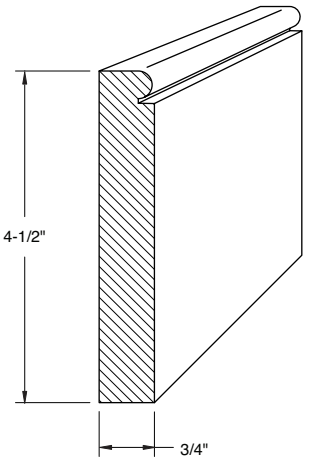

Beaded Base 381

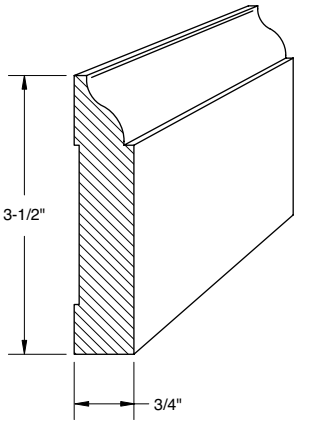

Base Moulding 897

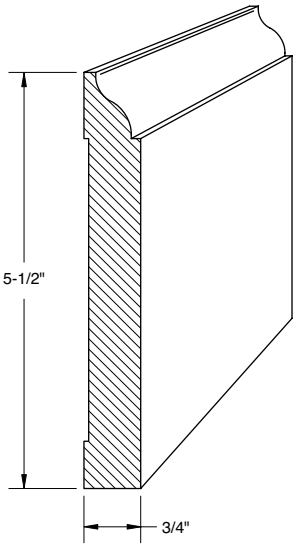

Base Moulding 898

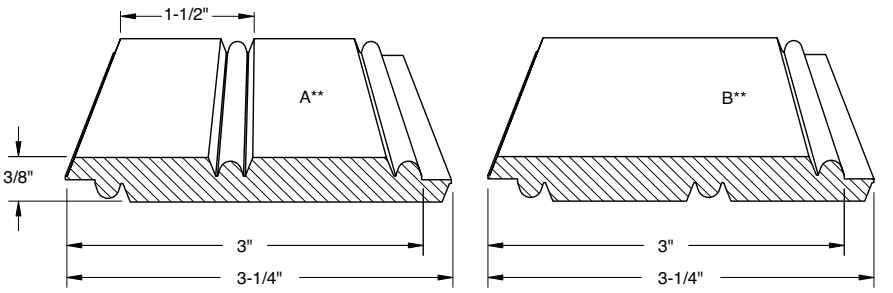

Beaded Panel B09*

* When ordering dual side profile product, specify “Face side A” or “Face side B”. When ordering prefinished product, specify “Finish side A” or “Finish side B.”
Note: Drawings not to scale.

Trim and Accent Mouldings (continued)

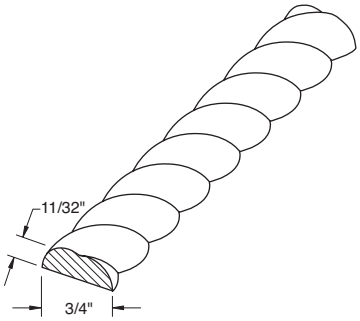

3/4" Rope

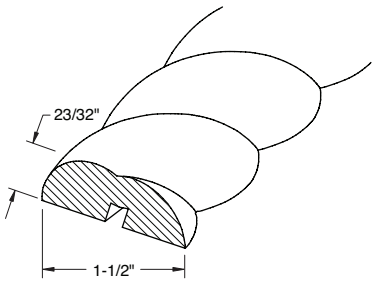

1-1/2" Rope

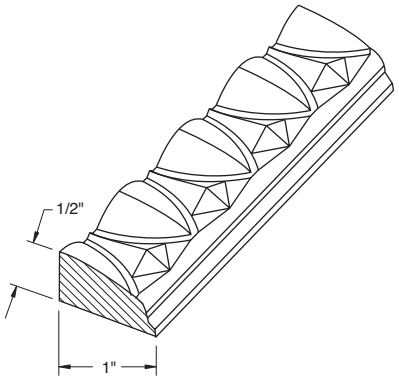

1" Egg & Dart

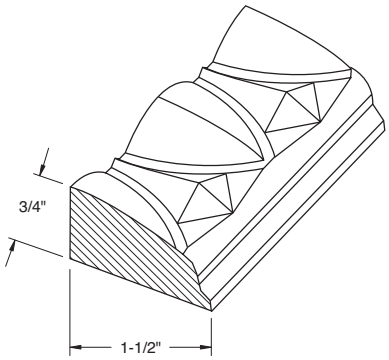

1-1/2" Egg & Dart

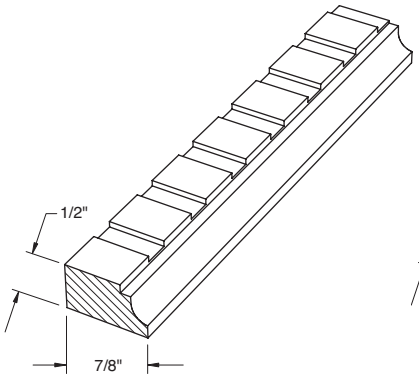

7/8" Dentil

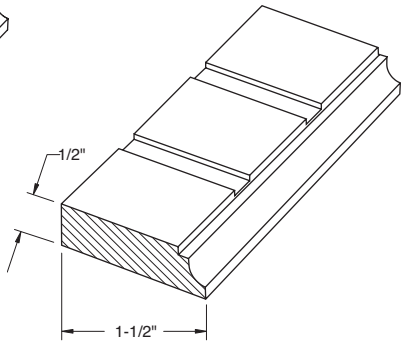

1-1/2" Dentil

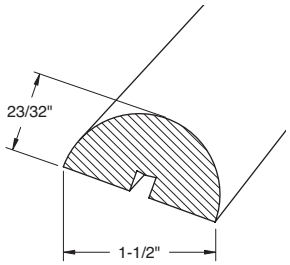

1-1/2" Plain

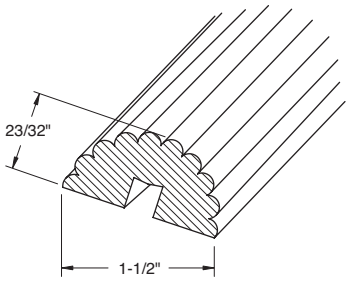

1-1/2" Reeded

Note: Drawings not to scale.

Trim and Accent Mouldings (continued)

Variable Width Light Rail #2578 Moulding

The #2578 Variable Width Light Rail combines a matching specie mounting plate and the flexibility of a variable front height ranging from 1-1/2" to 5-1/2". In addition to a light rail application, this moulding profile could be used as crown or fascia.

- Option to order both long edges profiled to match the doors' outside edge profile, or choose two different profiles.
- All published edge profiles available except: B, C, FP, L-034, L-253, L-304, and L-686.

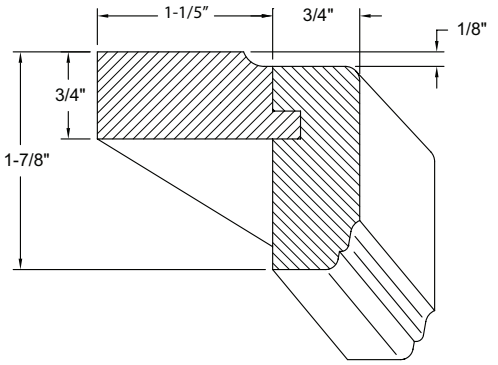

#2578 Variable Width Light Rail Moulding*				
Species	**1.50"-2.5"**	**2.501"-3.5"**	**3.501"-4.5"**	**4.501"-5.5"**
Alder				
Bamboo				
Birch, Red				
Birch, White				
Cherry				
Hickory				
Maple, Hard				
Maple, Soft				
Oak, Red				
Oak, White				
P. G. Hard Maple				
Pine, Clear				
Walnut				

Variable Width Filler #2470 Moulding

The #2470 Variable Width Filler combines a matching specie mounting plate and the flexibility of a variable front height ranging from 1-1/2" to 6". This moulding profile can be used vertically at the side of a cabinet or horizontally as crown or fascia.

- All published edge profiles available except: B, C, FP, L-034, L-253, L-304 and L-686.

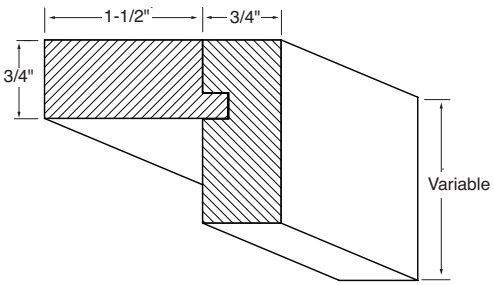

#2470 Variable Width Filler Moulding*				
Species	**1.50"-2.5"**	**2.501"-3.5"**	**3.501"-4.5"**	**4.501"-6"**
Alder				
Bamboo				
Birch, Red				
Birch, White				
Cherry				
Hickory				
Maple, Hard				
Maple, Soft				
Oak, Red				
Oak, White				
P. G. Hard Maple				
Pine, Clear				
Walnut				

* Many carriers have instituted oversize package surcharges. 8' mouldings are subject to these surcharges. These surcharges do not apply if delivered on a Conestoga truck.

A Moulding Cut-Down Option is available, which trims moulding to 90" in length.

Specialty Mouldings

Shiplap #2580 Moulding

The 8' Shiplap moulding program provides a variety of moulding widths in 12 species, allowing designers to achieve a wide variety of looks from farmhouse to modern.

- Mouldings are profiled to automatically leave a 3/16" gap between the face of adjacent sticks during installation, creating the signature Shiplap appearance.

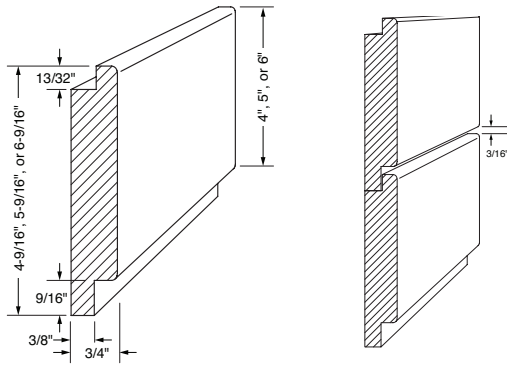

#2580 Shiplap Moulding*							
Species	4-9/16" width (4" face)	5-9/16" width (5" face)	6-9/16" width (6" face)	Species	4-9/16" width (4" face)	5-9/16" width (5" face)	6-9/16" width (6" face)
Alder				Maple, Soft			
Birch, Red				Oak, Red			
Birch, White				Oak, White			
Cherry				P.G. Hard Maple			
Hickory				Pine, Clear			
Maple, Hard				Walnut			

1/4" Solid Refacing Moulding #2073

- Moulding #2073 is solid 1/4" thick and designed to be applied over the face frames of existing cabinetry in field refacing applications.
- Available in 1/16" width increments from 1" to 6" wide x 96" long.
- Variable width refacer's moulding is available in Choice grade material. Sizes shown in the table below are for 1/4" thick "surfaced four sides" (S4S) square stock, molded and sanded.
- Available finished or unfinished. If finish option is chosen, moulding will be finished on face and two long edges only.

Ordering and Sizing Specifications

- Moulding is categorized and priced by width. Moulding width refers to the smallest whole-inch dimension of the refacing segment required. If the moulding is 1-1/4" wide, the appropriate pricing will be located in the 2" column. This rule is applicable to all sizes.
- Moulding wider than 5-1/16" may have one glue joint running the entire length.

#2073 1/4" Solid Refacing Moulding*						
Species	1" width	2" width	3" width	4" width	5" width	6" width
Alder						
Bamboo						
Birch, Red						
Birch, White						
Cherry						
Hickory						
Maple, Hard						
Maple, Soft						
Oak, Red						
Oak, White						
P.G. Hard Maple						
Pine, Clear						
Walnut						

* Many carriers have instituted oversize package surcharges. 8' mouldings are subject to these surcharges. These surcharges do not apply if delivered on a Conestoga truck.

A moulding Cut-Down Option is available which trims moulding to 90" in length.

CONESTOGA™ WOOD SPECIALTIES

8 Foot Non-Standard Moulding Pricing and Availability (All pricing per 8 ft. piece)

Design and Profile	Size	Alder	Bamboo	Birch, Red	Birch, White	Cherry	Hickory	Maple, Hard	Maple, Soft	Oak, Red	Oak, White	PG Hard Maple	Pine, Clear	Walnut
Crown B10	4-15/16"													
Cove Crown 120	3-1/4"													
Crown 344	4-3/8"													
Crown 859	5-1/2"													
Crown 1017	4-1/4"													
Crown 1557	3-13/16"													
Crown 1621	6-1/2"													
Crown 1622	6-1/2"													
Crown 1623	6-1/2"													
Crown 2057	5-9/16"													
Crown 2310	4-1/4"													
Shaker Crown 2516	4-3/16"													
Light Rail 1448	2-1/4"													
Light Rail 1619 w/mounting plate	2-5/8													
Colonial Casing 21	2-1/4"													
Case Moulding 466	3-1/4"													
Base Cap 860	1-1/2"													
Inside Corner 474	3/4"													
135° Outside Corner 1319	1-15/16"													
135° Outside Corner 1995	1-9/16"													
Outside Corner 2788	1"													
Beaded Trim 1439	2"													
Inset Parting Bead 2302	1"													

- All 8' Non-Standard Moulding profiles will incur a net set up charge when less than 100 linear feet of any specie is ordered.
- Size is nominal. Actual 8 foot length is between 94" and 97".
- All 8' Non-Standard Mouldings can be ordered finished “Face Only” or finished “Face and Back”.
- See Finishing, Section 8 for pricing details.
- Many carriers have instituted oversize package surcharges. 8' mouldings are subject to these surcharges. These surcharges do not apply if delivered on a Conestoga truck.
- A Moulding Cut-Down Option is available, which trims the moulding to 90" in length.

Key

Non-standard item 10 day lead-time.

NA **Not available**

Non-Standard Mouldings

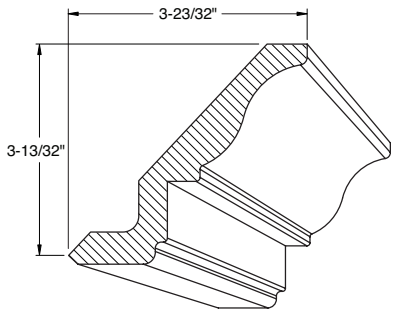

Crown B10*

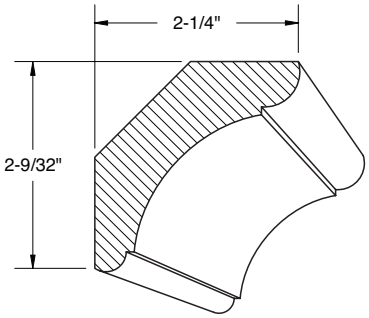

Cove Crown 120

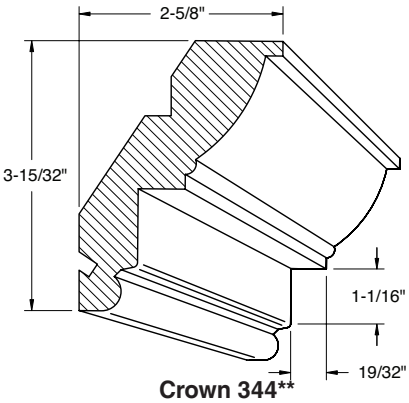

Crown 344**

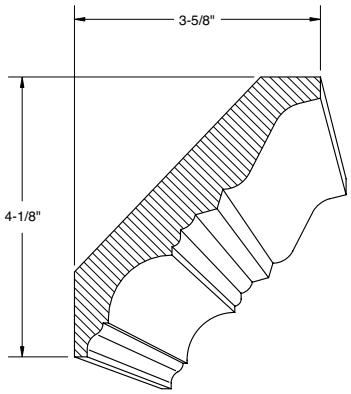

Crown 859

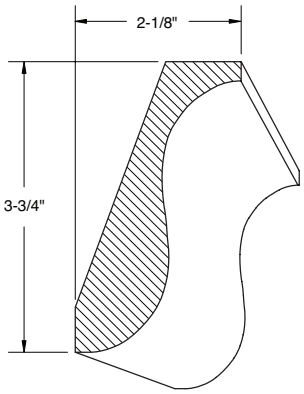

Crown 1017

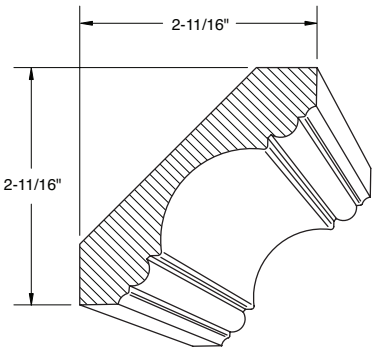

Crown 1557

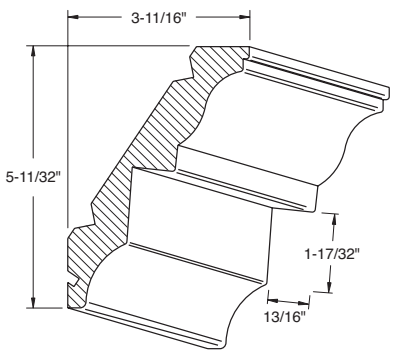

Crown 1621***

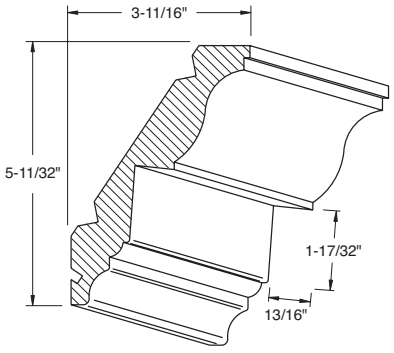

Crown 1622***

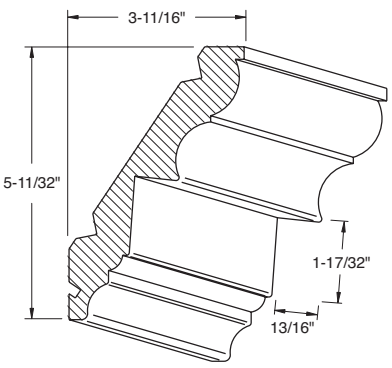

Crown 1623***

* Crown B10 will accomodate 3/4" Rope and 7/8" Dentil.
** Crown moulding 344 will accommodate mounting plate 384 and 3/4" Rope, 7/8" Dentil and 1" Egg & Dart.
*** Crown mouldings 1621, 1622, 1623 will accommodate Mounting Plate 384 and 1-1/2" Rope, Dentil and Egg & Dart.
All profiles are subject to a setup charge for orders less than 100 linear feet. See pricing page for details.
Note: Drawings not to scale.
Many carriers have instituted oversize package surcharges. 8' mouldings are subject to these surcharges. These surcharges do not apply if delivered on a Conestoga truck.

Non-Standard Mouldings (continued)

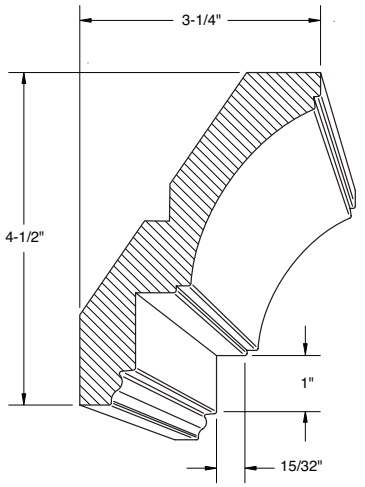

Crown 2057*

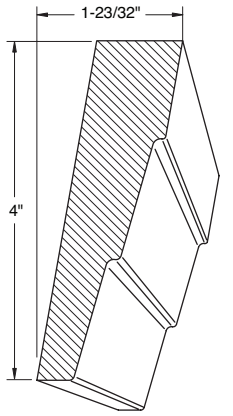

Crown 2310

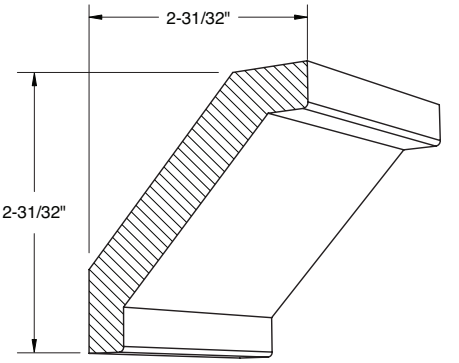

Shaker Crown 2516

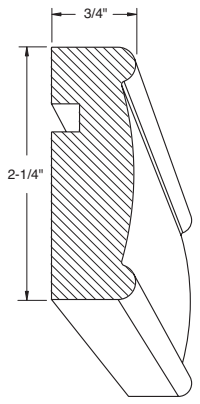

Light Rail 1448**

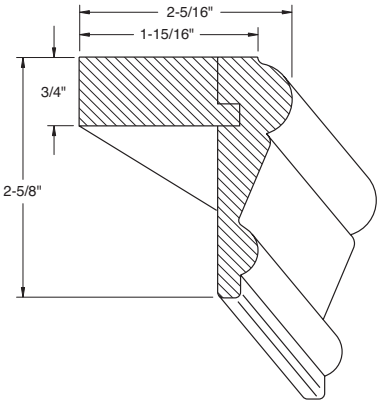

Light Rail 1619* w/mounting plate**

* Crown 2057 will accomodate 3/4" Rope, 7/8" Dentil and 1" Egg & Dart.
** Light Rail 1448 will accommodate mounting plate 470.
*** Light Rail 1619 will be manufactured with a Paint Grade Hard Maple mounting plate, additional species available through Special Designs.
All profiles are subject to a setup charge for orders less than 100 linear feet. See pricing page for details.
Note: Drawings not to scale.
Many carriers have instituted oversize package surcharges. 8' mouldings are subject to these surcharges.
These surcharges do not apply if delivered on a Conestoga truck.

Non-Standard Mouldings (continued)

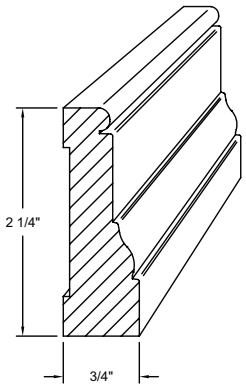

Colonial Casing 21

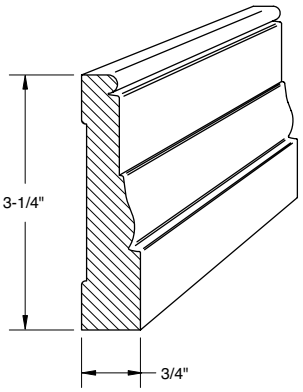

Case Moulding 466

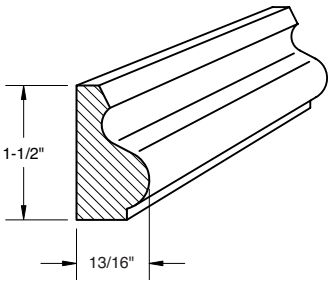

Base Cap 860

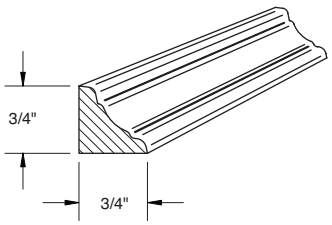

Inside Corner 474

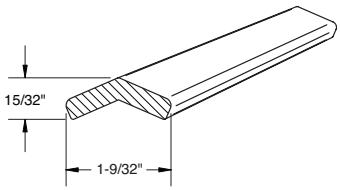

135˚ Outside Corner 1319

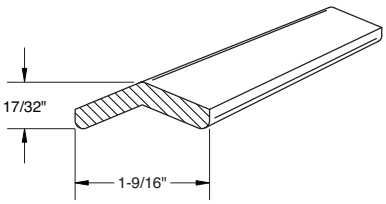

135˚ Outside Corner 1995

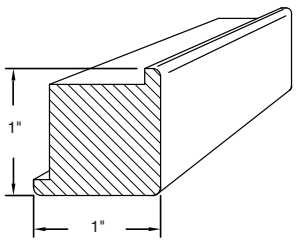

Outside Corner 2788

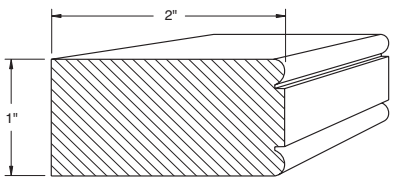

Beaded Trim 1439

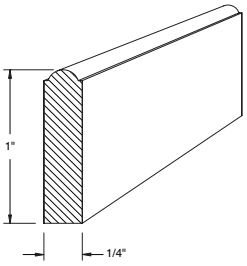

Parting Bead 2302

All profiles are subject to a setup charge for orders less than 100 linear feet. See pricing page for details.
Note: Drawings not to scale.
Many carriers have instituted oversize package surcharges. 8' mouldings are subject to these surcharges. These surcharges do not apply if delivered on a Conestoga truck.

Moulding Assembly Options

Conestoga's pre-assembled moulding options provide a cost effective alternative to installing mounting cleats and decorative accessory mouldings. By eliminating the need to assemble mouldings in your shop, you can increase throughput and focus your skilled labor on more profitable tasks. Assembled mouldings also finish more attractively, providing additional area for glaze hang up, accentuating the entire profile of decorative accessory mouldings.

Mounting Plate Installation Option

- The Mounting Plate Installation Option allows mounting plates to be pre-applied to select crown and light rail mouldings. For assembled mouldings over 8 feet in length, mounting plate will consist of two lengths cut to size.
- Eligible profiles include all published standard and non-standard crowns, 345 Reversible Frieze and 1448 Light Rail.
- Pricing is calculated by adding the cost of both eight foot moulding lengths plus for the Mounting Plate Installation option.
- Mounting Plate will consist of Paint Grade Hard Maple unless matching specie is otherwise requested.
- To order, designate "Mounting Plate Installation" next to each piece of moulding to be pre-assembled.
- Finishing Option is available for pre-assembled mouldings. See the Finishing Program Section for pricing and finish availability.

Decorative Moulding Assembly Option

- The Decorative Moulding Assembly Option allows customers to order select crown mouldings with accessory mouldings pre-assembled.
- 342, 343, 344 and 2057 Crown mouldings can be combined with the 7/8" Dentil, 1" Egg & Dart and 3/4" Rope mouldings.
- 1621, 1622 and 1623 Crown mouldings can be combined with the 1-1/2" Dentil, Egg & Dart and Rope mouldings.
- Pricing is calculated by adding the cost of both eight foot moulding lengths plus for the Decorative Moulding Assembly Option.
- To order designate "Decorative Moulding Assembly" next to each piece of moulding to be pre-assembled.
- Finishing Option is available for pre-assembled decorative mouldings. See the Finishing Program Section for pricing and finish availability.

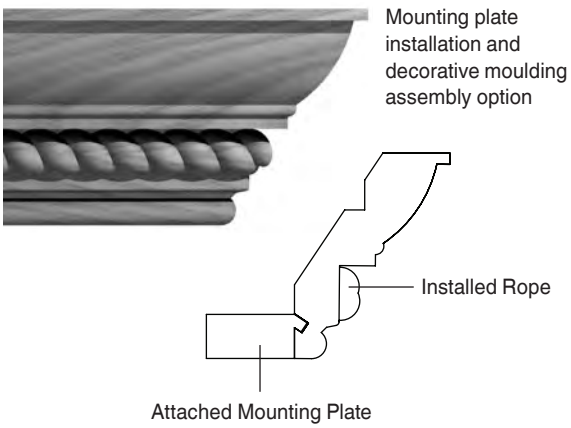

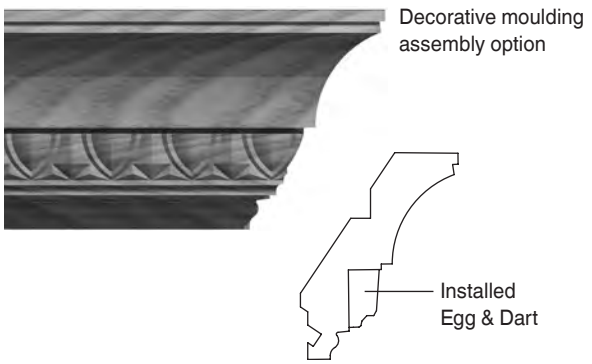

Moulding Cut-Down Option

To combat the exorbitant fees freight carriers are charging for packages 96" or longer, Conestoga now offers an option to cut-down any of our mouldings to 90". This includes both trimming of the moulding to length and creating the associated packaging.

- net upcharge per piece.
- To order specify "Cut-down to 90 inch" Option.

Special Order Moulding Program

- 8 foot special order mouldings are categorized and priced by width. Moulding width is the smallest whole-inch dimension necessary to manufacture that particular moulding profile. For example: 1-1/4" wide moulding pricing is in the 2" moulding width column. This rule is applicable to all sizes.
- Special Order Mouldings are only available in Choice grade material. Standard 8 foot length is 94" to 97". Any length greater than 97" and up to 12 foot lengths may be ordered in all Standard species except Bamboo, Red Birch and 1" White Birch. There will be a net upcharge per piece, in addition to the extra Material Footage Charge. Extended 15 day lead-time applies to 10 to 12 foot mouldings. Contact Customer Service for specie availability and pricing.

Special Order Moulding - 8 ft. Choice Grade Pricing (10 day lead-time)						
	Moulding Width					
Specie	**1"**	**2"**	**3"**	**4"**	**5"**	**6"**
Alder**						
Bamboo*						
Birch, Red*						
Birch, White*						
Cherry						
Hickory						
Maple, Hard						
Maple, Soft						
Oak, Red						
Oak, White						
Paint Grade Hard Maple						
Pine, Clear White						
Walnut						

*Bamboo, Red Birch and 1" White Birch available in 8 foot lengths only.
**Alder available up to a maximum of 115".

- A net setup charge will be applied to all non-standard profile orders totaling less than 100 feet.
- Prices given in the chart are for 3/4" thick mouldings. 1" thick mouldings incur a 30% upcharge.
- Volume discounts per ft.
  1,000–3,000 ft.
  3,001–5,000 ft.
  Over 5,000 ft.
- Many carriers have instituted oversize package surcharges. 8' mouldings are subject to these surcharges. These surcharges do not apply if delivered on a Conestoga truck.
- A Moulding Cut-Down Option is available, which trims the moulding to 90" in length.

Random Length Cabinet Framing

- Random length cabinet framing is available only in Prime grade material. Sizes shown in the pricing table below are for 3/4" thick “surfaced four sides” (S4S) square stock. Optional sanding is available at no additional cost. Specify sanded or unsanded when ordering.
- These pieces may contain a limited amount of defects and color variation permitted in the established rules of the National Hardwood Lumber Association for this grade. Pieces over 8 foot in length will be approximately 80% defect-free. Pieces under 8 foot in length will be approximately 90% defect-free. Defect locations will vary.

Ordering and Sizing Specifications

- Framing is categorized and priced by width. Framing width refers to the smallest whole-inch dimension necessary to manufacture that particular frame. For example: if the framing is 1-1/4" wide, the appropriate pricing will be located in the 2" framing width column, or if the framing is 2-11/16" wide, the appropriate pricing will be located in the 3" framing width column. This rule is applicable to all sizes.
- Random length framing is available in 4 to 12 foot lengths. Exact lengths may not be specified.
- Framing wider than 5-1/16" may have one glue joint running the entire length of the framing.
- Minimum order quantity is 100 feet.
- Optional grooving for Conestoga’s Cabinet System’s assembly splines is available. Stile and rail material must be ordered separately.

Random Length Cabinet Framing Pricing - per linear ft. (10 day lead-time)

	Framing Width					
Specie	1"	2"	3"	4"	5"	6"
Alder						
Bamboo*						
Birch, Red						
Birch, White						
Cherry						
Hickory						
Maple, Hard						
Maple, Soft						
Oak, Red						
Oak, White						
Paint Grade Hard Maple						
Pine, Clear White						
Walnut						

*Bamboo available in 8 foot lengths only.

- Prices given in the chart are for 3/4" thick mouldings. 1" thick moulding incurs a 30% upcharge.
- Volume discounts per ft.
  1,000–3,000 ft.
  3,001–5,000 ft.
  Over 5,000 ft.
- Many carriers have instituted oversize package surcharges. 8' mouldings are subject to these surcharges. These surcharges do not apply if delivered on a Conestoga truck.

Custom Dovetail Drawer Boxes

- Conestoga's Drawer Box program offers multiple wood specie selections and custom options. Information about dovetail drawer boxes and related options are found on the following pages.
- Dovetail drawer boxes are fully assembled; Hard Maple, Soft Maple and Walnut can be ordered unfinished or finished; Natural Birch drawer boxes are only available finished. See finishing information contained in this section.
- Natural Birch, Hard Maple, Soft Maple and Walnut drawer box options and accessories have a 7 day standard lead-time, and a 2 day Code Red expedite lead-time; add 2 days for finishing. All other non-published drawer box species, add 5 additional days.

Custom Dovetail Drawer Box Specifications

The following species are available for the 5/8" Custom Dovetail Drawer Box program:

- Hard Maple and Soft Maple boxes are constructed with solid Maple sides, fronts and backs and 1/4" or 3/8" thick Maple veneer (wood composite core) bottom.
- Natural Birch drawer boxes are constructed with solid Birch sides, fronts, backs and 1/4" or 3/8" thick Birch veneer face and sound back plywood bottom.
- Walnut boxes are constructed with solid Walnut sides, fronts, backs and Walnut 1/4" or 3/8" thick veneer plywood bottom.
- Two finishing options are available with custom drawer boxes.
  - Standard finish on all program species is a durable, low emission UV topcoat.
  - Hand sprayed, catalyzed conversion varnish is available at an additional upcharge on Hard Maple, Soft Maple and Walnut drawer boxes.
- Both finish options have a 15° sheen topcoat. See Additional Options and Pricing Chart.
- Natural Birch drawer boxes are also available with unsanded/unfinished dovetails as a cost savings. Sides, backs and bottoms have a clear UV finish. Unfinished dovetails not available on Hard Maple, Soft Maple or Walnut when finishing option is selected.

To determine the list price of a Dovetail Drawer Box:

- Multiply the perimeter of the box in linear inches (2 x [width + depth]) by the appropriate height/specie price.
- Add the mandatory assembly charge per box. All drawer boxes are assembled.
- Add the price of all selected options.
- A minimum of 50 linear inches applies.

Pricing Example:
Hard Maple 4" high x 12" wide x 21-1/2" deep, assembled, finished, 1/4" bottom, undermount notching

Dovetail Drawer Box Size Parameters			
Description	**Minimum**	**Maximum**	**Increments**
Height	2"	12"	1/2"*
Width	3"	46"	1/16"
Depth	3"	31"	1/16"

*1/8" added to accomodate 3/8" bottoms.

Dovetail Drawer Box Pricing

Drawer Box Height, 1/4" Bottom						
Specie	**2" – 3"**	**3-1/2" – 4"**	**4-1/2" – 6"**	**6-1/2" – 8"**	**8-1/2" – 10"**	**10-1/2" – 12"**
Natural Birch, unfinished dovetails						
Natural Birch						
Maple, Hard						
Maple, Soft						
Walnut						

Drawer Box Height, 3/8" Bottom 1/8" added to accommodate 3/8" bottoms						
Specie	**2-1/8" – 3-1/8"**	**3-5/8" – 4-1/8"**	**4-5/8" – 6-1/8"**	**6-5/8" – 8-1/8"**	**8-5/8" – 10-1/8"**	**10-5/8" – 12-1/8"**
Natural Birch*						
Maple, Hard						
Maple, Soft*						
Walnut						

*Natural Birch and Soft Maple 3/8" drawer box bottoms utilize Hard Maple veneer with composite core.

Mandatory Assembly Fee	**Standard for all sizes**	
Additional Options and Pricing		
Bottom Thickness		
1/4"	Standard	See drawer box height charts for pricing
3/8"	Requires 1/8" to be added to the drawer box height	
No Bottom	Optional	No Upcharge
Bottom Reveal		
1/2"	Standard	No Upcharge
3/8"	Optional	
Finishing Options (clear topcoat only, per box)		
Standard UV finish		
100 linear inches or fewer per box		
Greater than 100 linear inches per box		
Hand spray finish (pricing per box in addition to standard finishing charges)		
Top Edge Profiles (unfinished dovetail option not available)		

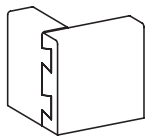

Standard eased edge
1/16" Radius
No upcharge

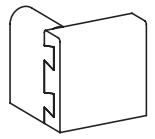

Eased edge front and back
bull-nosed sides

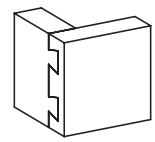

Machine edge
four sides

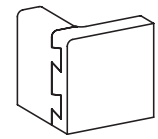

1/8" Routed edge
All except outside front

Reveal Detail

Reveal: 1/2" or 3/8"

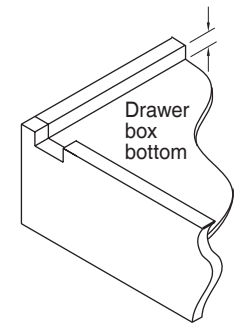

Dovetail Drawer Box Options



Custom Logo – Laser Engraving

- All Laser Engraved logos will be located on the interior upper left front corner of the drawer box. Custom locations not available.
- A minimum drawer box height of 3" is required for the Laser Engraving option. Drawer boxes with modified side heights are not eligible for the Laser Engraving option.
- Custom Logo Laser Engraving is available in two resolutions:
    - Standard resolution produces a detailed engraved image: list per drawer box
    - Enhanced resolution products a deeper, darker engraved image: list per drawer box
- Customers must supply a digital image of their logo. The file/image provided will significantly impact the quality of the engraved logo. The digital image must be provided in one of the following file formats:
    - Adobe Illustrator (.AI)
    - Scalable Vector Graphic (.SVG)
    - Encapsulated Post Script (.EPS)
- Upon receipt of an acceptable logo file, Conestoga will produce samples of both the Standard and Enhanced versions of the logo on the eligible specie or species of your choice. These samples will be shipped to the customer for review to select the preferred version.
- Upon receipt of the signed Approval Form indicating the preferred resolution, Conestoga will program our system to default to the customer selected resolution. This resolution will automatically be designated each time the Laser Engraved Logo option is ordered.



Private Label Logo Burn

- The Private Label Logo Burn is the approved customer logo branded into the wood drawer side.
- The Logo Burn will be located on the interior upper left front corner of the drawer box. Custom locations not available.
- A minimum drawer box height of 3" is required for the Logo Burn option. Drawer boxes with modified side heights are not eligible for the Private Label Logo Burn option.
- The Private Label Logo Burn is priced at $.90 list per drawer box.
- To initiate the creation of a brand with your company logo, contact your Conestoga Sales Representative or Customer Service for instructions.

Dovetail Drawer Box Options

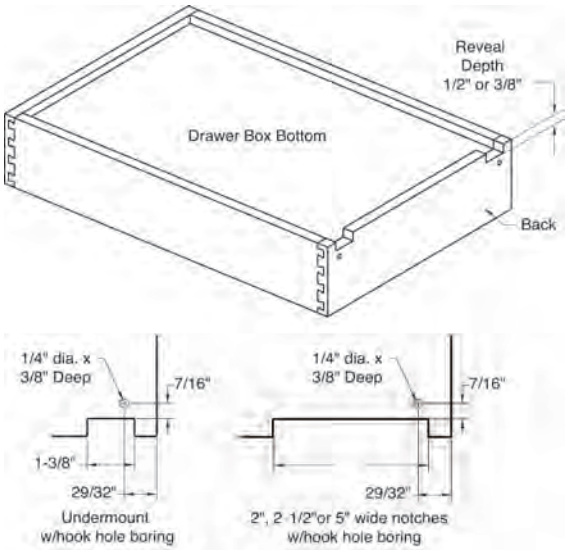

Undermount Notching Options

- 1-3/8" undermount notching only.
- 1-3/8" undermount notching with hook hole boring (detail shown).
- 2" wide undermount notching only.
- 2" wide undermount notching with hook hole boring (detail shown).
- 2-1/2" wide undermount notching only.
- 2-1/2" wide undermount notching with hook hole boring (detail shown).
- 5" wide undermount notching with hook hole boring (included standard).
- Minimum drawer box widths:
  - 1-3/8" and 2" notch: 6".
  - 2-1/2" and 5" notch: 11-1/4".

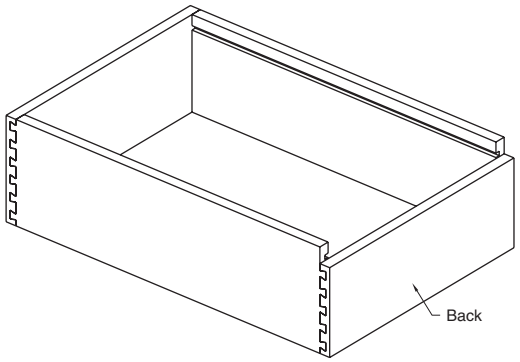

Bread Box Top Routing

- Designed for 1/8" or 1/4" thick lids.
- 9/32" deep groove on sides only.
- 1/8" rout is 5/32" wide.
- 1/4" rout is 9/32" wide.
- Minimum box height 4".
- **Lid not included.**

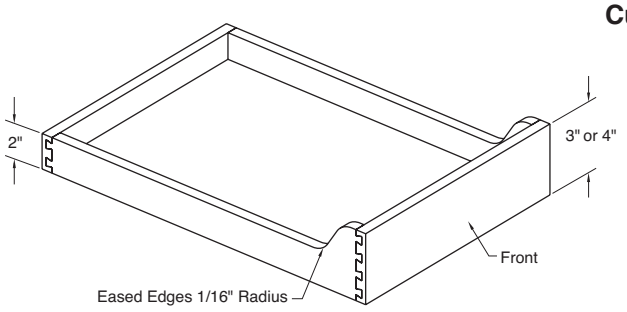

Cut-Down Sides

- Available for 3", 4" or 6" high drawer boxes only.
- Add 1/8" to box height dimensions when ordering 3/8" bottoms.
- Rear box height 2".
- Unfinished dovetails not available.

Dovetail Drawer Box Options (continued)

Keyboard Tray Option

- Minimum box width 12".
- Minimum box height 2".
- Maximum box height 3-1/8".
- Unfinished dovetails not available.

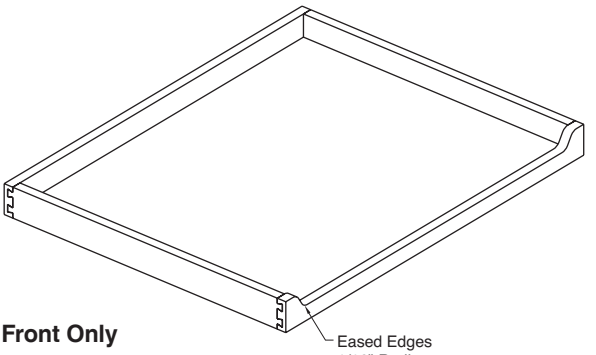

Front Only

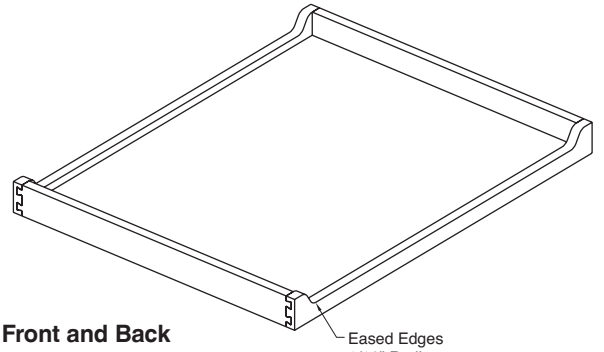

Front and Back

Blum TANDEM Clip Options Pre-drilling Installed TANDEM Clips

- Pre-drilling and installation options are for Blum TANDEM drawer hardware.
- Pre-drilled pilot holes are drilled at the proper angle and spacing to accept TANDEM clips.
- Minimum box width 5-1/2".
- 1/2" bottom reveal only.
- Undermount notching with hook hole boring are an option and must be specified.
- Blum TANDEM Clips feature side-to-side, height and depth adjustment for fine tuning drawer front alignment. Loose clips not available.

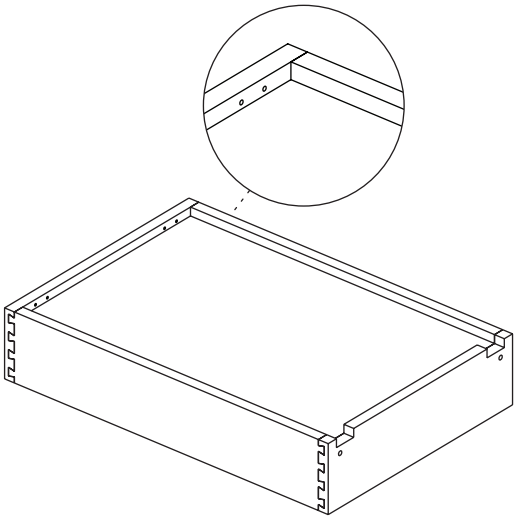

Blum TANDEM Clips Pre-drilled

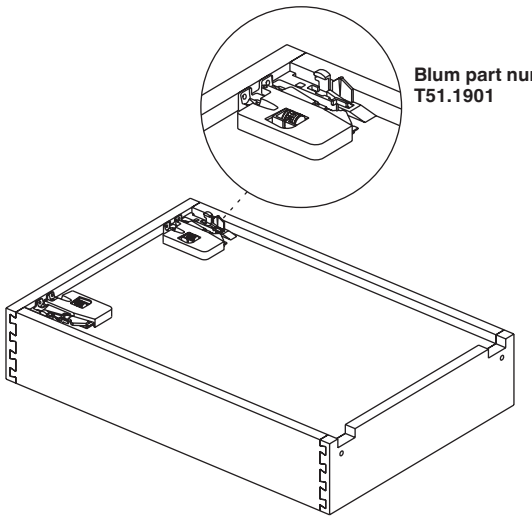

Blum TANDEM Clips Installed

Dovetail Drawer Box Options (continued)

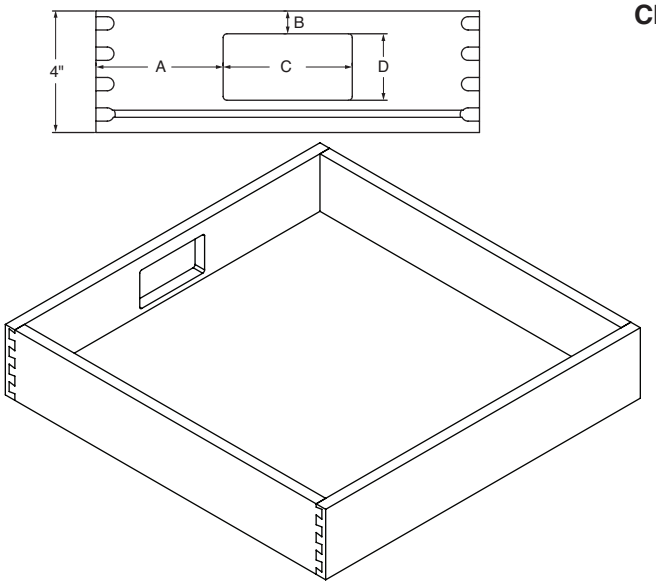

Charging Station Rout

- Customizable rout is designed to accommodate charging station and drawer mounted receptacle devices (rout only – charging device not included).
- Rout is always in the back of the drawer box; no options.
- Minimum drawer box width is 12", minimum box height is 4".
- Must specify A, B, C and D dimensions. Use Form #6-A – Specialty Drawer Box Order Form.
- Charging rout can be centered or off-set from either side.
- Minimum dimensions for Charging Station Rout:
  - Dimension A is 1".
  - Dimension B is 1/2".
  - Dimension C is Drawer Box width minus 2".
  - Dimension D is Drawer Box height minus 1-1/2".
- Not available with unfinished dovetail option.

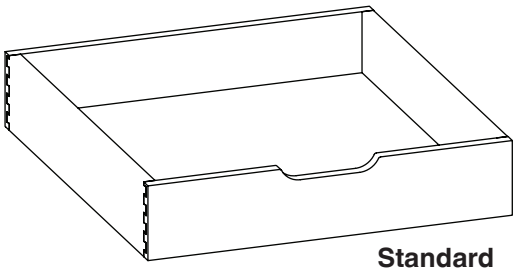

Standard

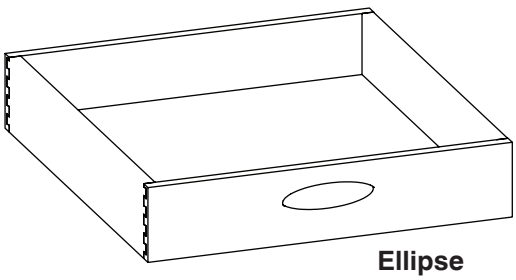

Ellipse

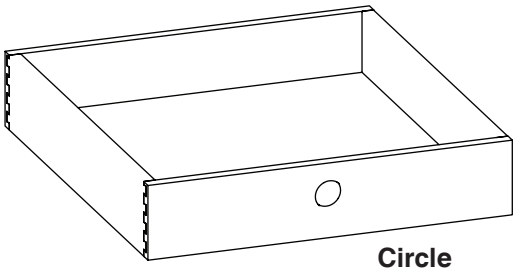

Circle

Hand Pull

- All hand pulls are centered on front of drawer box.
- Unfinished dovetails not available with hand pulls.

Standard:

- Minimum box width is 8”.
- Hand pull is 5-1/4” wide and 11/16” high, centered on the front of the drawer box.

Ellipse:

- Minimum box width is 9”.
- Hand pull is 5” wide, 1-1/2” high, and located 1” below the top edge of the drawer box.

Circle:

- Minimum box width is 5-3/4”.
- Hand pull is 1-1/2” diameter and located 1” below the top edge of the drawer box.

Dovetail Drawer Box Options (continued)

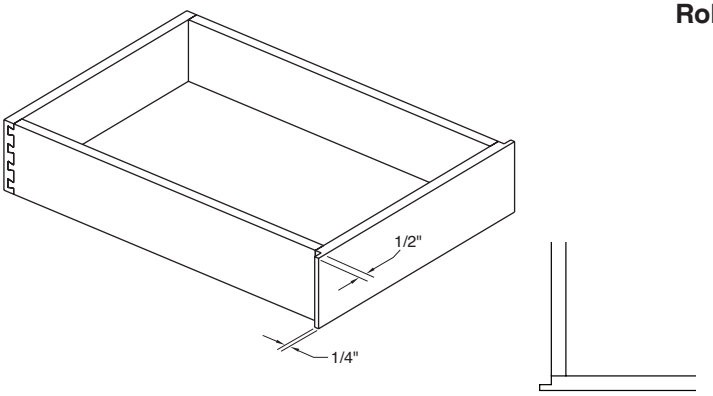

Roll Out Drawer Front Option

- Drawer box front is 1" wider than the overall ordered box width.
- Minimum box width is 8".

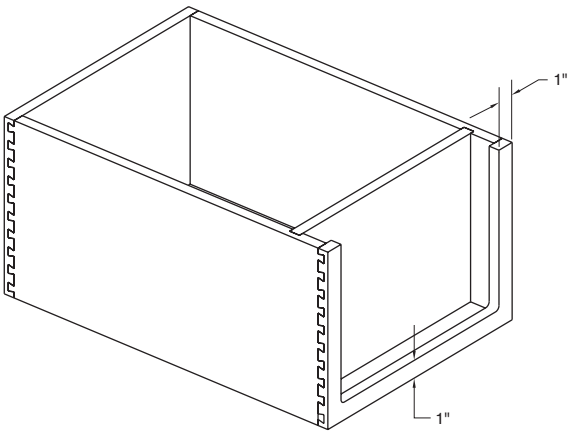

Visible Storage Unit Routing

- Minimum box width is 12".
- Maximum box width is 24".
- Minimum box height is 7".
- Removable divider included. Located 1-1/2" behind front of drawer box.

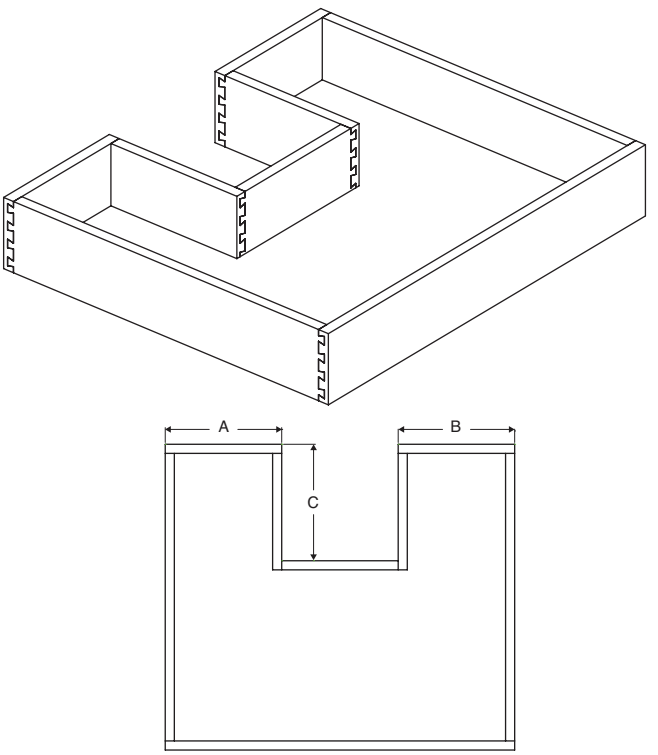

Back Recessed Option

- Minimum drawer box width is 12".
- Minimum depth is 8-1/4".
- Must specify A, B and C dimensions.
- Recess can be centered or off-set from either side.
  - Minimum dimension for A and B is 4".
  - Minimum dimension for C is 3-5/8".

Custom Drawer Accessories

Cutlery Dividers

- Available in Hard Maple, Natural Birch and Walnut.
- All cutlery divider designs are constructed with a 1/4" bottom unless “No Bottom” is specified.
- When ordering specify design A, B, C, D, E, F, G or H.
- Specify depth and width in 1/16" increments. Both dimensions are measured from outside edge to outside edge.
- Depth for all designs must be between 16" to 22". Refer to specific design for width range.
- When ordered with a drawer box, cutlery dividers are sized 1-5/16" less than the exterior width and depth of the overall drawer box size.
- To order a custom size cutlery divider, specify the depth, width and design as a separate line item on the order form.
- Standard height is 3-1/8". Height modifications available; see following pages for options and pricing.
- Finishing Option charge

Design A:
Natural Birch
Hard Maple
Walnut

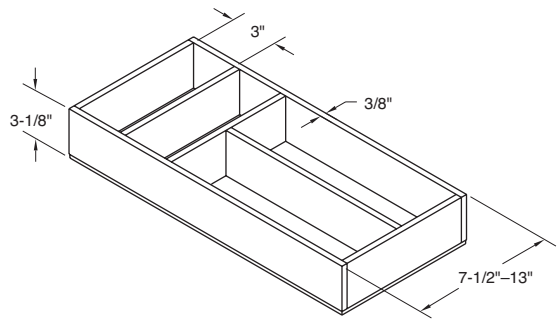

Design B:
Natural Birch
Hard Maple
Walnut

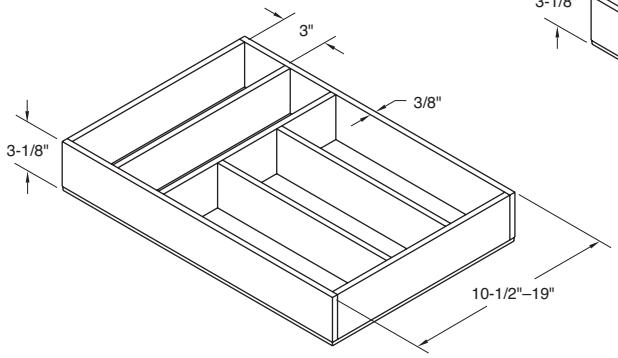

Design C:
Natural Birch
Hard Maple
Walnut

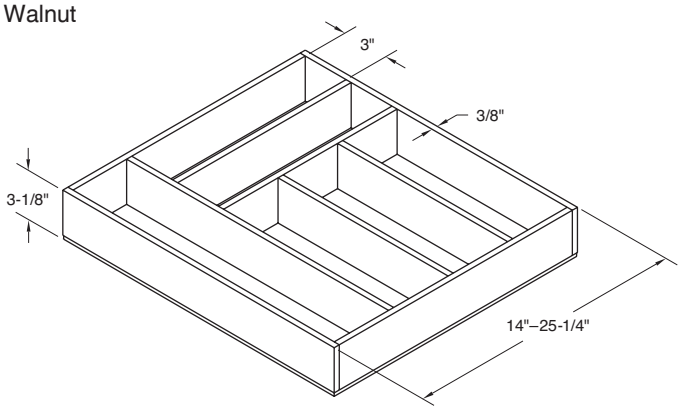

Design D:
Natural Birch
Hard Maple
Walnut

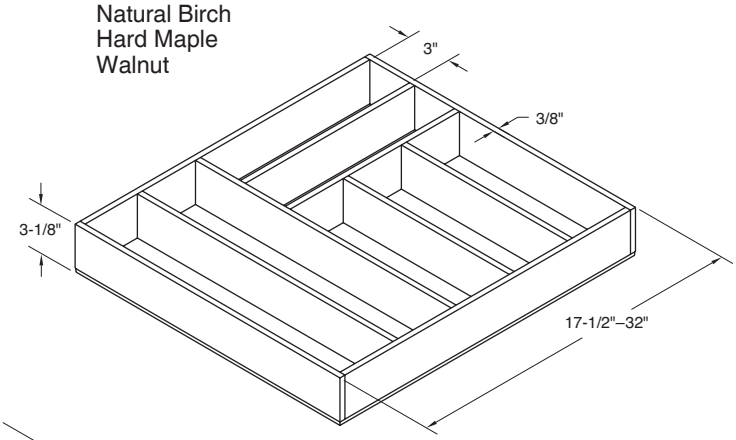

Custom Drawer Accessories (continued)

Design E:
Natural Birch, Hard
Maple, Walnut

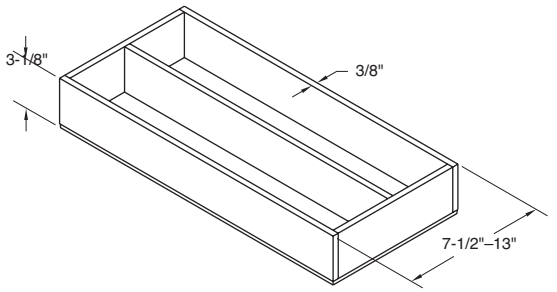

Design G:
Natural Birch, Hard
Maple, Walnut

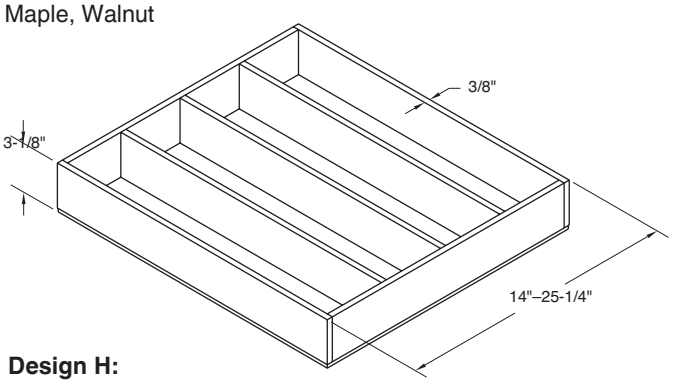

Design F:
Natural Birch, Hard
Maple, Walnut

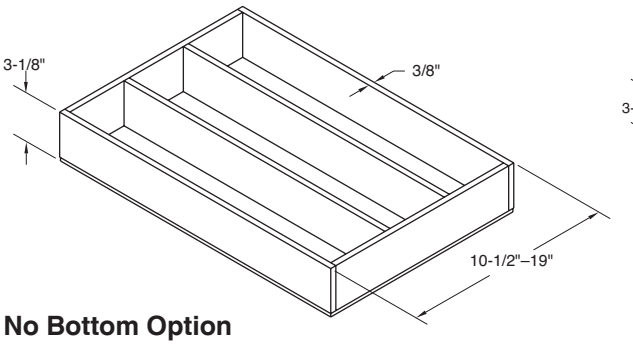

Design H:
Natural Birch, Hard
Maple,Walnut

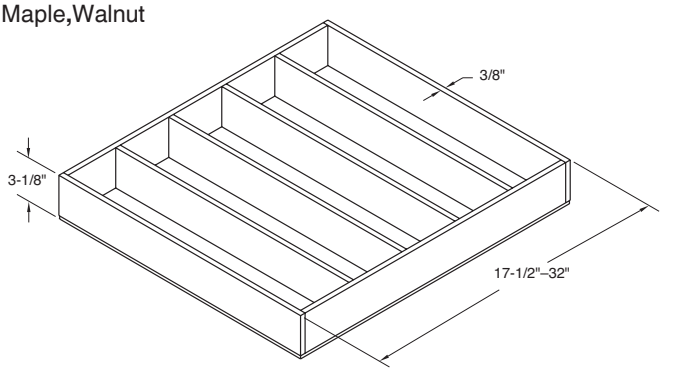

No Bottom Option

- No upcharge.
  - All cutlery divider designs are constructed with a 1/4" bottom unless “NO BOTTOM” is specified.
  - Maximum height of cutlery dividers with no bottom is 2-7/8".

Reduced Height Option

- upcharge.
  - All divider designs can be reduced in height for specialty applications.
  - Specify divider height when ordering.
  - Minimum divider height with bottom is 1-5/8".
  - Minimum divider height without bottom is 1-3/8".

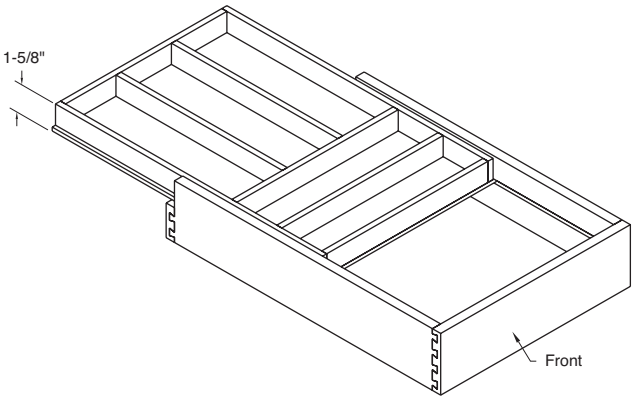

Sliding Cutlery Divider

- Divider Design Charge.
  - Available with all divider configurations; specify design when ordering.
  - Top divider is 1-3/8" high mounted on a 1/4" base.
  - Minimum overall drawer box height is 3-15/16".
  - Recommended maximum drawer box width is 24" to ensure proper operation.

Custom Drawer Accessories (continued)



Fineline Cutlery Dividers

- Unique, tapered divider design affords sturdy compartment divisions with pleasing minimal profile.
- Available in Natural Birch or Walnut with a clear finish.
- Unit size prior to trimming is 1-15/16" high x 20-13/16" long. Standard widths shown in the pricing chart below.
- Base plate is designed to be trimmed to fit the interior dimensions of a specific drawer box.
- Each unit includes a trimmable depth extender for a truly custom fit and maximum storage.
- Optional knife block can be incorporated into cutlery units for maximum utensil storage.
  - Knife block measures 5-7/16" wide x 16-11/16" deep and accommodates 5 pieces of cutlery.
- **Cut-to-Size Option**
  - All Fineline dividers can be cut to fit inside a drawer box. Specify interior dimensions of drawer box.
  - Dividers will be packaged independently of the drawer box.
  - Cut-to-Size Option: list per kit.

Part No.	Description
556.87.601	Fineline Cutlery Insert – Walnut – 15-9/16" wide
556.87.602	Fineline Cutlery Insert – Walnut – 21-9/16" wide
556.87.603	Fineline Cutlery Insert – Walnut – 27-5/8" wide
556.87.604	Fineline Cutlery Insert – Walnut – 33-9/16" wide
556.87.901	Fineline Cutlery Insert – Birch – 15-9/16" wide
556.87.902	Fineline Cutlery Insert – Birch – 21-9/16" wide
556.87.903	Fineline Cutlery Insert – Birch – 27-5/8" wide
556.87.904	Fineline Cutlery Insert – Birch – 33-9/16" wide
Part No.	**Description**
556.91.640	Fineline Knife Block – Walnut – 5-7/16" wide x 16-11/16" long
556.91.940	Fineline Knife Block – Birch – 5-7/16" wide x 16-11/16" long

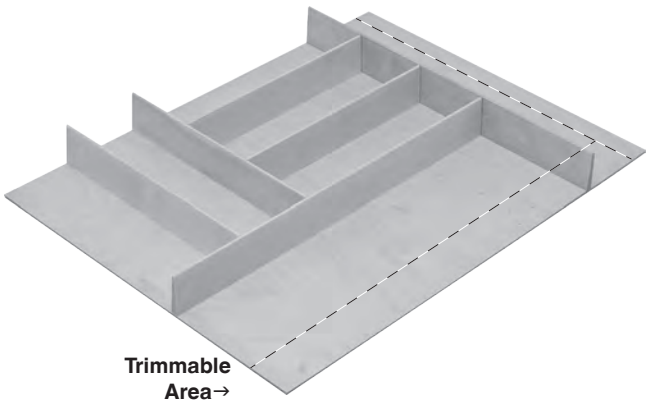

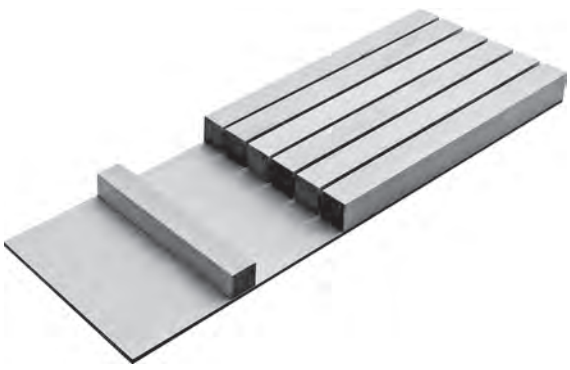

Custom Drawer Accessories (continued)

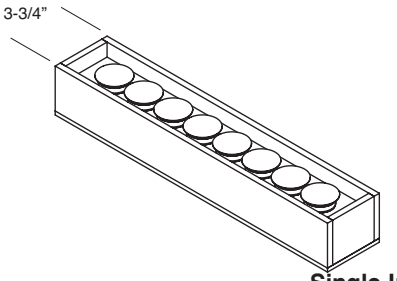

Single Insert Design:
Natural Birch, Hard Maple, Walnut

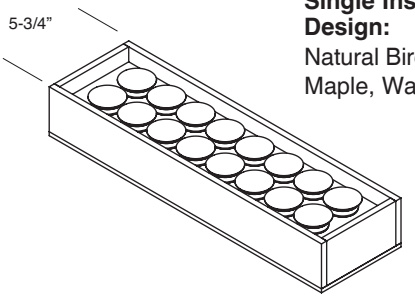

Double Insert Design:
Natural Birch, Hard Maple, Walnut

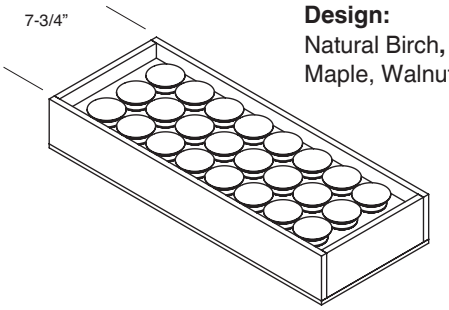

Triple Insert Design:
Natural Birch, Hard Maple, Walnut

Individual Serving Beverage Pod Drawer Inserts

- Available in Hard Maple, Natural Birch and Walnut.
- All inserts are constructed using 3/8" sides and ends, 1/4" bottom and 5/8" top storage panel.
- Height is 3-1/8". Width is fixed by design – no customization.
- Depth on all inserts is customizable between 16" and 22" in 1/16" increments.
- When ordered with a drawer box, inserts are sized 1-5/16" less than the exterior width and depth of the overall drawer box size.
- Inserts can be combined with any cutlery divider design to fully utilize entire drawer width. When this treatment is desired, specify the insert design as well as the divider design.
- Finishing Option charge

Custom Drawer Accessories (continued)

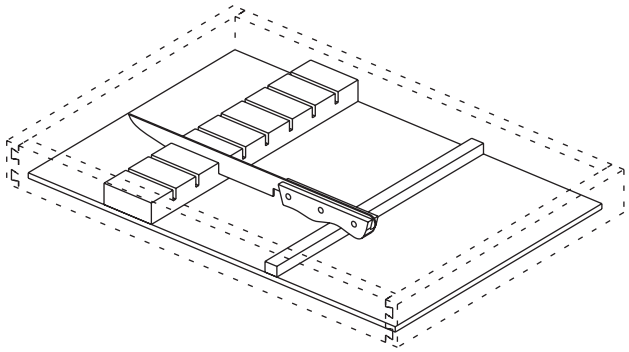

Knife Block Insert **Natural Birch**
Hard Maple
Walnut

- Can be sized to fit a specific drawer box or ordered separately. If ordering separately, specify width and depth.
- Knife block and handle rest are unfinished mounted on a prefinished 1/4" bottom.
- Spacing is 1-1/4" between slots.
- Minimum insert: 7-1/2" wide x 16" deep.
- Maximum insert: 21" wide x 22" deep.

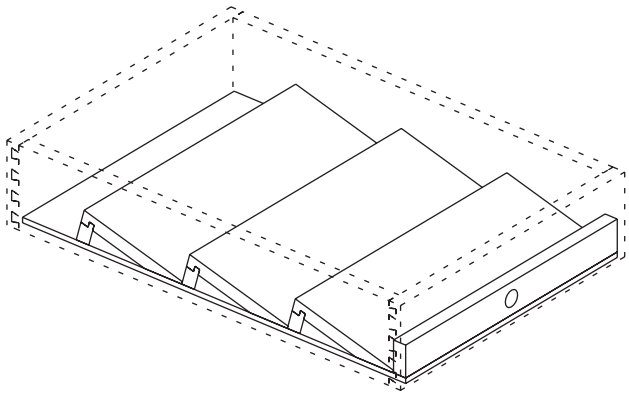

Spice Tray Insert

- Can be sized to fit a specific drawer box or ordered separately. If ordering separately, specify width and depth.
- 3/4" diameter finger hole centered on lead rail for ease of removal from drawer box.
- Spice rests are 5-1/4" wide, 1-1/2" high, mounted on a prefinished 1/4" bottom.
- Minimum insert: 7-1/2" wide x 17" deep.
- Maximum insert: 32" wide x 22" deep.

Spice Tray Insert Width			
Specie	**7-1/2" – 15"**	**15-1/16" – 23"**	**23-1/16" – 32"**
Natural Birch			
Maple, Hard			
Walnut			

Custom Drawer Accessories (continued)

Finish Sample Chip Display Boxes

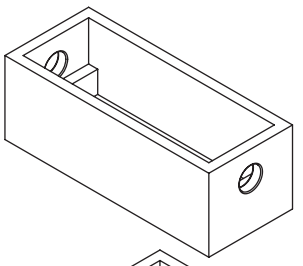

Single Set Design:
Natural Birch
Hard Maple
Walnut
Circle pull front/ back standard

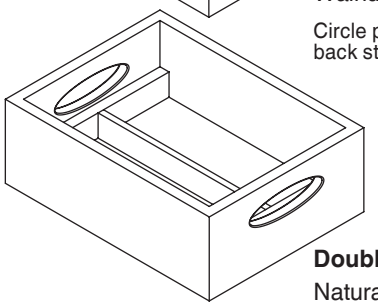

Double Set Design:
Natural Birch
Hard Maple
Walnut
Ellipse pull front/back standard

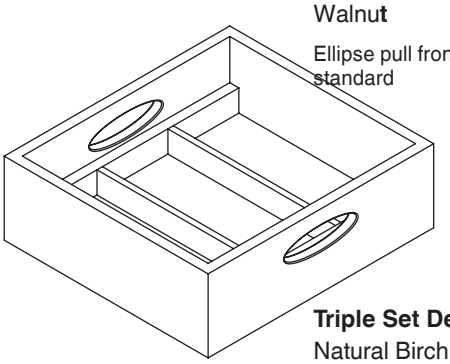

Triple Set Design:
Natural Birch
Hard Maple
Walnut
Ellipse pull front/ back standard

- Dovetailed drawer boxes with hand pulls and interior dividers accommodate Conestoga's standard size sample finish chips (3/8" thick x 4-3/8" wide x 6-1/8" high). Custom box sizing is also available to accommodate custom dimensioned chips.
- Finish sample chip sets must be ordered separately.
- Matching specie wooden spacers are installed in the front and back of each display box to allow easy indexing of samples.
- 5" high boxes standard.
- Sizing for standard Conestoga 26 piece chip sets:
- Single set design: 5" high x 5-3/4" wide x 14" deep.
- Double set design: 5" high x 10-5/8" wide x 14" deep.
- Triple set design: 5" high x 15-1/2" wide x 14" deep.
- To accommodate 32 piece chip sets, depth for all designs should be ordered 16-5/8" deep.
- Sample box price follows drawer box specie per lineal inch Material Charge, assembly and finishing charges plus the Design Charges.
- To order customized Finish Sample Chip Display Boxes, follow these min./max. size guidelines:
- Single set design: min. width 5-3/4", max. width 15", max. depth 21".
- Double set design: min. width 10-5/8", max. width 24", max. depth 21".
- Triple set design: min. width 15-1/2", max. width 31", max. depth 21".

Custom Drawer Accessories (continued)



Non-Slip Drawer Liners

- Non-Slip Drawer Liners keep utensils in place as drawers are opened and closed.
- A non-slip rubber surface is applied to a polystyrene backer to deaden sound an protect drawer bottoms against drips and minor spills.
- The attractive grey fiber pattern goes well with Birch, Maple and Walnut drawer boxes.
- Available in sheet form, is easily trimmed-to-size with a sharp utility knife and straight edge.
- Non-Slip Drawer Liners can be installed in both framed and full access cabinet drawers, including Conestoga's Advantage and Vesta RTA lines.

Part No.	Size (WxD)
547.92.525	46-1/16" x 19-3/4"
547.92.526	46-1/16" x 23-5/8"



Drawer Peg Storage System

- Drawer Peg Storage Systems are designed to fit into deep drawer boxes to provide flexible storage for stacked dishware.
- Peg Storage Systems include a 5/8" thick Maple or Walnut TSCA compliant plywood base plate with a durable clear polyurethane finish and matching specie 6" high solid wood posts. Number of posts varies by base size.
- Base plates are pre-drilled with patterned holes to accept the press in solid wood posts and can be trimmed to size on a table saw.
- Solid wood pegs can simply be pressed into the desired pre-drilled holes. No fasteners needed.
- Drawer Peg Storage Systems can be installed in both framed and full access cabinet drawers, including Conestoga's Advantage and Vesta RTA lines.

Part No.	Specie	Size (WxHxD)	Posts Per Kit
2103597A	Maple	24-1/4" x 6-5/8" x 21-1/4"	9
2103600A	Walnut	24-1/4" x 6-5/8" x 21-1/4"	9
2103598A	Maple	30-1/4" x 6-5/8" x 21-1/4"	12
2103601A	Walnut	30-1/4" x 6-5/8" x 21-1/4"	12
2103599A	Maple	39-1/4" x 6-5/8" x 21-1/4"	16
2103602A	Walnut	39-1/4" x 6-5/8" x 21-1/4"	16

Please refer to pricing through Con-Nex, our online ordering program

Cabinet Accessories

Adjustable Pull-Out Tray System Kits

- Adjustable Pull-Out Tray Hardware Systems feature prefinished Hard Maple pilasters, mounting hardware and Blum TANDEM Plus BLUMOTION Integrated Soft Close drawer full extension drawer slides. Trays not included.
- Kits available for 15, 18, 21, 24, 27, & 30” cabinet depths.
- Kits are designed for Base, Base Full Door, and Utility cabinets, but can be easily integrated into most cabinet configurations.
- Hardware Quantity per Kit:
  - Base Cabinet (accomodates 2 trays).
  - Base Full Door Cabinet (accomodates 3 trays).
  - Utility Cabinet (accomodates 5 trays).
- Kits available for Full Access, Framed Overlay, and Inset applications.
- Center stile applications require a partition inside the cabinet.
- Pull-Out Tray sizing calculator available on the Customer Business Portal.

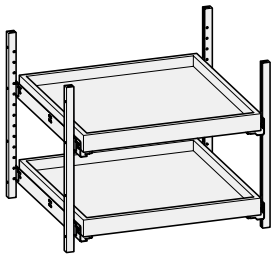

Base

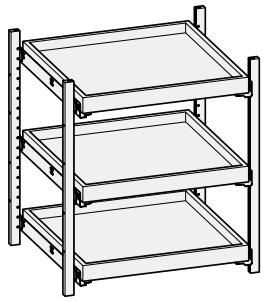

Base Full Door

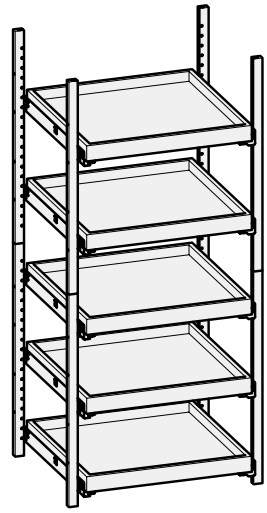

Utility

Drawer box width = D – 0.875"



Adjustable Pull-Out Tray System Kits				
Kit Description	**Pilaster Width**	**Base (2 Trays)**	**Base Full Door (3 Trays)**	**Utility (5 Trays)**
Full Access	7/8"	POTB-FA	POTBFD-FA	POTU-FA
Framed Overlay	1-1/8"	POTB-FR	POTBFD-FR	POTU-FR
Inset	2-3/8"	POTB-IN	POTBFD-IN	POTU-IN
Pilaster Length		19-5/8"	27-3/16"	*54-3/8"

*Two 27-3/16" Pilasters are stacked to achieve 54-3/8" Length

Please refer to pricing through Con-Nex, our online ordering program

Cabinet Accessories (continued)

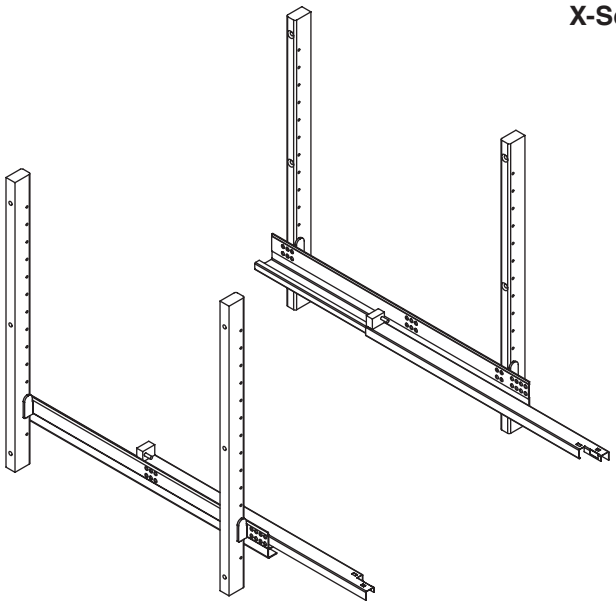

X-Series Adjustable Pull-Out Tray System Kits

- Adjustable Pull-Out Tray Hardware Systems feature clear prefinished Hard Maple components and patented drawer slide installation/adjustment brackets. Drawer slides not included.
- Installation/adjustment clips are designed for Blum TANDEM style undermount drawer slides.
- Pilasters and brackets use 5mm x 32mm spacing.
- Kits are available for base, vanity or tall utility cabinetry applications.
- Two cleat widths are available to accommodate overlay or inset and framed or frameless cabinet construction.
- Pilasters (vertical uprights) can be trimmed in width or height for installation in varied styles of cabinet construction and interior configurations.
- Drawer box width and depth dimensions are based on the requirements of the drawer hardware being used and must be ordered separately.
- 4 day Standard lead-time, 2 day Code Red expedite lead-time.

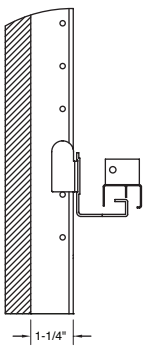

1-1/4" Pilaster kits with brackets

For frameless and most framed overlay applications.

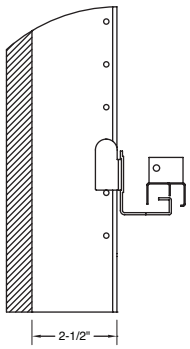

2-1/2" Pilaster kits with brackets

For inset, wide framing and thick door applications.

1-1/4" Pilaster Kits with Brackets		
Kit Number	**Description**	**Cabinet Application**
2100160A	20-7/8" Pilasters (4), Brackets (8)	Base with door and drawer
2100161A	28" Pilasters (4), Brackets (8)	Base full height door
2100162A	58-5/8" Pilasters (4), Brackets (20)	Tall Utility
2-1/2" Pilaster Kits with Brackets		
Kit Number	**Description**	**Cabinet Application**
2100163A	20-7/8" Pilasters (4), Brackets (8)	Base with door and drawer
2100164A	28" Pilasters (4), Brackets (8)	Base full height door
2100159A	58-5/8" Pilasters (4), Brackets (20)	Tall Utility

Please refer to pricing through Con-Nex, our online ordering program

Cabinet Accessories (continued)

Spice Storage Units

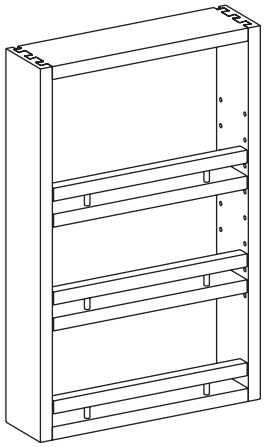

- Dovetail construction with 5/8" thick sides and ends.
- 1/4" plywood back flush with back of unit.
- 32mm line bore shelf support system.
- 5mm locking shelf clips.
- Matching specie retainer rail attached to unit bottom and each adjustable shelf.
- Installation hardware is not included. Additional hinges and adequate installation hardware are required to ensure proper operation.
- Available size range:

  Height: 18" to 36".
  Width: 8" to 21".
  Depth: 3-1/8" fixed.

- Finishing Option charge: per Spice Storage Unit.

Spice Storage Unit Pricing			
	Unit Width		
	8" – 13"	13-1/16" – 17"	17-1/16" – 21"
Unit Height	Natural Birch		
21" – 23"			
23-1/16" – 31"			
31-1/16" – 36"			
Unit Height	Hard Maple		
21" – 23"			
23-1/16" – 31"			
31-1/16" – 36"			
Unit Height	Walnut		
21" – 23"			
23-1/16" – 31"			
31-1/16" – 36"			

Shelves Per Unit	
Unit Height	# Per Unit
18" - 23"	2
23-1/16" - 31"	3
31-1/16" - 36"	4

To determine the list price of an interior storage unit:

- Find the size range of the unit in the applicable specie table. Select the price based on the overall width and height of the unit.
- Add finishing charges if applicable.

Spice Storage Unit Loose Shelves

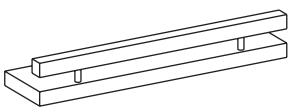

Natural Birch: Hard Maple: Walnut:

- Specify spice storage and unit width.
- Finishing is included in price.

Cabinet Accessories (continued)

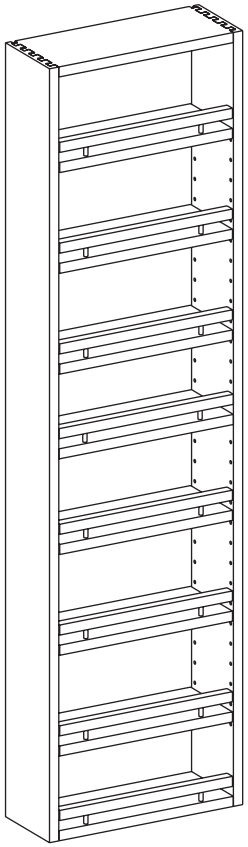

Can Storage Units

- Dovetail construction with 5/8" thick sides and ends.
- 1/4" plywood back flush with back of unit.
- 32mm line bore shelf support system.
- 5mm locking shelf clips.
- Matching specie retainer rail attached to unit bottom, fixed center shelf and each adjustable shelf.
- For structural integrity, units over 39" high have one fixed shelf, centered.
- Installation hardware is not included. Additional hinges and adequate installation hardware are required to ensure proper operation.
- Available size range:

  Height: 21" to 60".
  Width: 8" to 21".
  Depth: 5" fixed.

- Finishing Option charge: per Can Storage Unit.

Can Storage Unit Pricing

Unit Height	Unit Width 8" – 13"	13-1/16" – 17"	17-1/16" – 21"
Natural Birch			
21" – 23"			
23-1/16" – 31"			
31-1/16" – 39"			
39-1/16" – 47"			
47-1/16" – 55"			
55-1/16" – 60"			
Hard Maple			
21" – 23"			
23-1/16" – 31"			
31-1/16" – 39"			
39-1/16" – 47"			
47-1/16" – 55"			
55-1/16" – 60"			
Walnut			
21" – 23"			
23-1/16" – 31"			
31-1/16" – 39"			
39-1/16" – 47"			
47-1/16" – 55"			
55-1/16" – 60"			

Shelves Per Unit

Unit Height	# Per Unit
21" - 23"	2
23-1/16" – 31"	3
31-1/16" – 39"	4
39-1/16" – 47"*	5
47-1/16" – 55"*	6
55-1/16" – 60"*	7

*Units over 39" include 1 fixed shelf.

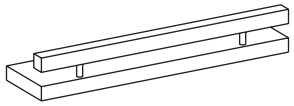

Can Storage Unit Loose Shelves

Natural Birch Hard Maple: Walnut:

- Specify can storage and unit width.
- Finishing is included in price.

Cabinet Accessories (continued)

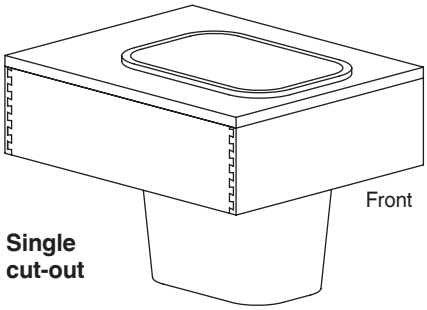

Single cut-out

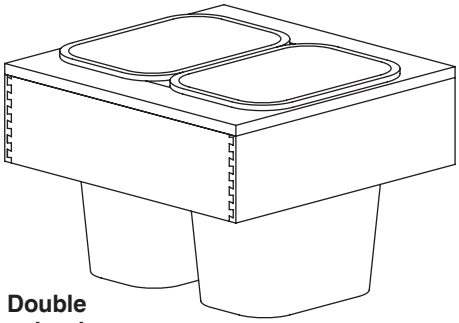

Double cut-out

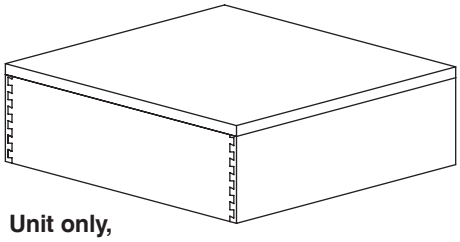

Unit only, no cut-out

TANDEM Trash Can Pull-Out

- 3/4" Hard Maple plywood top for Hard Maple and Natural Birch units.
- Designed to be used with Blum TANDEM plus BLUMOTION full extension drawer slides and narrow drawer front locking clips (not included).
- Hardware reference numbers:
  - Blum TANDEM plus BLUMOTION: 563H5330B.
  - Narrow Drawer Front Locking Clips: T51.0801.20 (L/R).
- Unit with single cut-out includes one 7 gallon grey color waste can; double cut-out includes two waste cans; no cut-out option does not include a waste can.
- Cut-outs also accommodate 13 gallon trash cans.
- Height: 6-3/4" fixed (including 3/4" plywood top).
- Depth: 21-3/4" fixed.
- Finishing: per pull-out.

Single cut-out:
Minimum width: 14-5/8".
Maximum width: 19-1/8".

Double cut-out:
Minimum width: 20-5/8".
Maximum width: 28-1/8".

Unit only, no cut-out (solid top shipped loose):
Minimum width: 14-5/8".
Maximum width: 28-1/8".

Waste can only Part #2100102.

TANDEM Trash Can Pull-Out			
Specie	**Single Cut-Out**	**Double Cut-Out**	**No Cut-Out**
Natural Birch			
Maple, Hard			
Walnut			

Cabinet Accessories (continued)

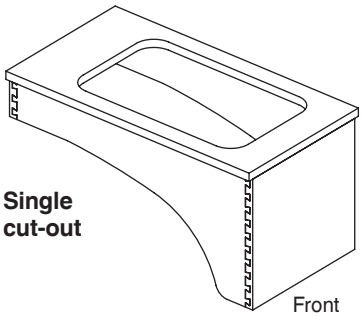

Single cut-out

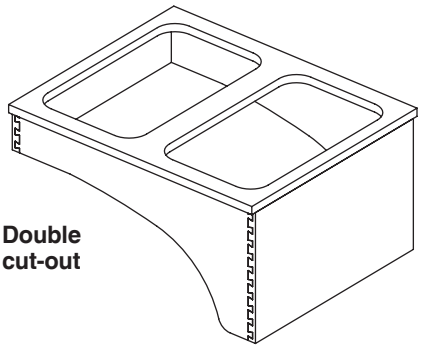

Double cut-out

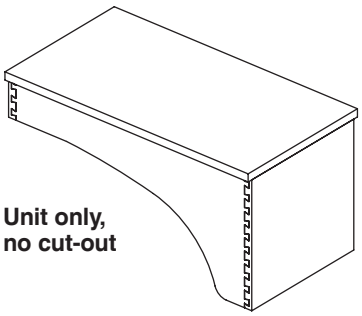

Unit only, no cut-out

Trash Can Pull-Out

- 3/4" Hard Maple plywood top for Hard Maple and Natural Birch units.
- When ordering Trash Can Pull-Outs, specify the drawer box width. The top will extend 3/8" past the sides of the drawer box.
- Designed to be used with side mount full extension slides – functional hardware not included.
- Unit with single cut-out includes one 7 gallon, grey color waste can; double cut-out includes two waste cans; no cut-out option does not include a waste can.
- Front height is 10" to accommodate door mounting hardware. Rear height is 3".
- Depth: 21-3/4" fixed.
- Finishing:per pull-out.

Single cut-out:
Minimum width: 11".
Maximum width: 21".

Double cut-out:
Minimum width: 15".
Maximum width: 27".

Unit only, no cut-out (solid top shipped loose):
Minimum width: 11".
Maximum width: 27".

Waste can onlyPart #2100102A.

Specie	Single Cut-Out	Double Cut-Out	No Cut-Out
Natural Birch			
Maple, Hard			
Walnut			

Cabinet Accessories (continued)





Ready to Install Door Mounted Trash Can Pull-Out

- Ready to Install Door Bottom Mounted Trash Can Pull-Outs ship fully assembled and include drawer hardware and floor mounting cleats for quick and easy installation.
- Full extension soft close undermount glides with 100 lb. weight capacity.
- Units include white 35 quart or 50 quart trash cans.
- Units with 35 quart cans may be used in base cabinets with a functioning top drawer. Units with 50 quart cans must be used in full height door base cabinets.
- White Birch TSCA compliant plywood construction with a durable UV topcoat.
- Integrated 6-way adjustable door mounting hardware allows for easy installation for all overlays and framing widths. Door not included.
- Floor mounted units can be easily installed in framed or full access cabinetry, including Conestoga's Advantage and Vesta RTA lines.

Part No.	Size (WxHxD)	Fits Cabinet	Min. Opening
2100836A	Single 35 quart can – 11-5/8" x 19-13/16" x 21-13/32"	15" Base	12"
2100837A	Double 35 quart cans – 14-5/8" x 19-13/16" x 21-13/32"	18" Base	15"
2100838A	Single 50 quart can – 11-5/8" x 24-7/32" x 21-13/32"	15" Base	12"
2100839A	Double 50 quart cans – 14-5/8" x 24-7/32" x 21-13/32"	18" Base	15"
2103646A	Double 35 quart cans – 17-5/8" x 19-13/16" x 21-13/32"	21" Base	18"
2103647A	Double 50 quart cans – 17-5/8" x 24-7/32" x 21-13/32"	21" Base	18"

Please refer to pricing through Con-Nex, our online ordering program

Cabinet Accessories (continued)



Value Line Bottom Mount Trash Can Pull-Out with Soft Close Glides

- Value Line Bottom Mount Trash Can Pull-Out with Blum Soft Close Glides ship fully assembled, ready to install.
- Full extension undermount glides with soft close feature, 100 lb. weight capacity.
- Units with 27 and 35 quart cans are designed for use in base cabinets with functioning top drawer. Units with 50 quart cans are designed for use in full height door base cabinets.
- All trash cans are white polymer material.
- Hard Maple TSCA compliant plywood dovetail construction with a semi-gloss finish.
- Adjustable door mounting brackets allow easy installation and adjustment, regardless of overlay. Door not included.
- Units are floor-mounted and compatible with Conestoga's Advantage framed and Vesta full access RTA cabinet lines.

Part No.	Size (WxHxD)	Fits Cabinet	Min. Opening
2105439A	Double 27 quart cans - 11-1/2" x 19-11/16" x 21-1/2"	15" Base	11-3/4"
2105440A	Single 35 quart can - 11-1/2" x 19-11/16" x 21-1/2"	15" Base	11-3/4"
2105441A	Single 50 quart can - 11-1/2" x 23-19/32" x 21-1/2"	15" Base	11-3/4"
2105442A	Double 35 quart cans - 14-1/2" x 19-5/8" x 21-1/2"	18" Base	14-3/4"
2105443A	Double 35 quart cans - 17-1/2" x 19-5/8" x 21-17/32"	21" Base	17-3/4"
2105444A	Double 50 quart cans - 17-1/2" x 23-17/32" x 21-17/32"	21" Base	17-3/4"



Hard Maple Bottom Mount Trash Can Pull-Out with Blum Soft Close Glides

- Hard Maple Bottom Mount Trash Can Pull-Out with Blum Soft Close Glides ship fully assembled, ready for installation.
- Blum TANDEM full extension undermount glides with soft close feature, 100 lb. weight capacity.
- Units with 27 and 35 quart cans are designed for use in base cabinets with a functioning top drawer. Units with 50 quart cans are designed for use in full height door base cabinets.
- All trash cans are metallic silver polymer material.
- Solid Hard Maple dovetail construction with a durable semi-gloss finish.
- Adjustable door mounting brackets allow easy installation and adjustment, regardless of overlay.Door not included.
- Units are floor mounted and compatible with Conestoga's Advantage framed and Vesta full access RTA cabinet lines.

Part No.	Size (WxHxD)	Fits Cabinet	Min. Opening
2100878A	Double 27 quart cans - 12" x 19-11/32" x 22-1/8"	15" Base	11-3/4"
2100879A	Single 35 quart can - 12" x 19-1/2" x 21-21/32"	15" Base	11-3/4"
2100880A	Single 50 quart can - 12" x 23-3/8" x 21-3/4"	15" Base	11-3/4"
2100881A	Double 35 quart cans - 15" x 20-3/8" x 22-1/32"	18" Base	14-3/4"
2100882A	Double 50 quart cans – 15" x 24-1/4" x 21-21/32"	18" Base	15"
2100883A	Double 35 quart cans - 18" x 20-5/16" x 22-1/32"	21" Base	17-3/4"
2100884A	Double 50 quart cans - 20-1/2" x 19-11/32" x 22-1/32"	21" Base	18"

Cabinet Accessories (continued)



Ready to Install Hinged Door Floor Mounted Trash Can Pull-Out

- Ready to Install Hinged Door Floor Mounted Trash Can Pull-Out ships fully assembled and includes drawer hardware and floor mounting cleats for quick and easy installation.
- Soft close full extension undermount glides with 110 lb. weight capacity.
- Units include white 35 quart or 50 quart trash cans.
- Units with 35 quart cans are designed for use in base cabinets with a functioning top drawer. Units with 50 quart cans must be used in full height door base cabinets.
- White Birch TSCA compliant plywood construction with a UV topcoat.
- Floor mounted units can be easily installed inside hinged door framed or full access cabinetry, including Conestoga's Advantage Framed and Vesta Full Access Cabinet RTA lines.

Part No.	Size (WxHxD)	Fits Cabinet	Min. Opening
2103648A	Single 35 quart can – 11" x 19-1/2" x 21-3/8"	15" Base	12"
2103649A	Single 50 quart can – 11" x 23-3/4" x 21-3/8"	15" Base	12"
2103650A	Double 35 quart cans – 14" x 19-1/2" x 21-3/8"	18" Base	15"
2103651A	Double 50 quart cans – 14" x 23-3/4" x 21-3/8"	18" Base	15"
2103652A	Double 35 quart cans – 17" x 19-1/2" x 21-3/8"	21" Base	18"
2103653A	Double 50 quart cans – 17" x 23-3/4" x 21-3/8"	21" Base	18"



Waste Management Center with Side Storage

- Waste Management Center with Side Storage ships fully assembled, ready to install.
- Blum MOVENTO full extension undermount glides with soft close feature, 155 lb. weight capacity.
- Designed for 24” wide base cabinets.
- Solid Hard Maple dovetail construction with a semi-gloss finish.
- Units with 35 quart cans are designed for use in base cabinets with functioning top drawer. Units with 50 quart cans are designed for use in full height door base cabinets. One green lid is included in both units to indicate recycling can.
- All trash cans are metallic silver polymer material.
- Side storage compartment includes a waterproof vinyl lining.
- Adjustable door mounting brackets allow easy installation and alignment adjustment, regardless of overlay. Door not included.
- Units are floor mounted and compatible with Conestoga’s Advantage framed and Vesta full access RTA cabinet lines.

Part No.	Size (WxHxD)	Fits Cabinet	Min. Opening
2105426A	Double 35 quart cans - 20-31/32” x 20-21/32” x 22-1/32”	24" Base	21"
2105427A	Double 50 quart cans - 20-31/32” x 24-9/16” x 22-1/32”	24" Base	21"

Cabinet Accessories (continued)



Steel Bottom Mount Trash Can Pull-Out with Soft Close

- Steel Bottom Mount Trash Can Pull-Out with Soft Close units are aggressively priced, ship fully assembled, ready to install.
- Heavy gauge powder-coated metal wire framed construction with full-extension undermount roller soft close glides.
- Units with 27 and 35 quart cans are designed for use in base cabinets with a functioning top drawer. Units with 50 quart cans are designed for use in full height door base cabinets.
- All trash cans are metallic silver polymer material.
- Adjustable door mounting brackets are pre-assembled and allow for door alignment. Door not included.
- Units are floor mounted and compatible with Conestoga's Advantage framed and Vesta full access RTA cabinet lines.

Part No.	Size (WxHxD)	Fits Cabinet	Min. Opening
2105434A	Single 35 quart can - 10-7/8" x 19" x 22-3/32"	15" Base	11-1/2"
2105435A	Single 50 quart can - 10-7/8" x 22-29/32" x 22-3/32"	15" Base	11-1/2"
2105436A	Double 27 quart cans - 11-1/4" x 18-15/16" x 22-3/32"	15" Base	11-1/2"
2105437A	Double 35 quart cans - 14-3/8" x 19" x 22-3/32"	18" Base	14-1/2"
2105438A	Double 50 quart cans - 14-3/4" x 22-29/32" x 22-3/32"	18" Base	15"



Aluminum Bottom Mount Trash Can Pull-Out with Soft Close

- Aluminum Bottom Mount Trash Can Pull-Out with Soft Close units ship fully assembled, ready to install.
- Full extension undermount glides with 1-1/2" over travel and soft close feature, 85 lb. weight capacity.
- Produced in Italy, these units utilize heavy-duty aluminum frame construction, known for smooth, quite operation.
- Units with 27 and 35 quart cans are designed for use in base cabinets with a functioning top drawer. Units with 50 quart cans are designed for use in full height door base cabinets.
- All trash cans are metallic silver polymer material.
- Optional door mount extension brackets attach to the existing door mount brackets and allow adjustment from 3/4" to 2-1/2". Order using part number 2105433A. Door not included.
- Units are floor mounted and compatible with Conestoga's Advantage framed and Vesta full access RTA cabinet lines.

Part No.	Size (WxHxD)	Fits Cabinet	Min. Opening
2105428A	Single 35 quart can - 10-3/4" x 19-1/32" x 21-7/8"	15" Base	11"
2105429A	Single 50 quart can - 10-3/4" x 22-29/32" x 21-7/8"	15" Base	11"
2105430A	Double 27 quart cans - 11-11/16" x 18-29/32" x 22-7/32"	15" Base	12"
2105431A	Double 35 quart cans - 14-25/32" x 19-1/32" x 22-3/32"	18" Base	15"
2105432A	Double 50 quart cans - 14-25/32" x 22-29/32" x 22-3/32"	18" Base	15"

Cabinet Accessories (continued)



Ready to Install Metal Base Trash Can Pull-Out

- Metal Base Trash Can Pull-Outs ship fully assembled and include an integrated bottom mount assembly for quick and easy installation.
- Soft close full extension undermount glides.
- Polished chrome flat wire, welded construction.
- Grey acrylic liner secures trash cans in place and stops trash from falling onto the cabinet bottom. Liner is removable for ease of cleaning.
- Units include grey 35 quart or 50 quart trash cans.
- Units with 35 quart cans may be used in base cabinets with a functioning top drawer. Units with 50 quart cans must be used in full height door base cabinets.
- Integrated 6-way adjustable door mounting hardware allows for easy installation for all overlays and framing widths. Door not included.
- Floor mounted units can be easily installed in framed or full access cabinetry, including Conestoga's Advantage Framed and Vesta Full Access RTA lines.

Part No.	Size (WxHxD)	Fits Cabinet	Min. Opening
2103643A	Single 35 quart can – 12" x 19-13/16" x 21-13/16"	15" Base	12"
2103644A	Double 35 quart cans – 15" x 19-13/16" x 21-13/16"	18" Base	15"
2103645A	Double 50 quart cans – 15" x 23-3/4" x 21-13/16"	18" Base	15"



Pull-Out Bottom Mount Trash Can

- Pull-Out Bottom Mount Trash Cans ship fully assembled, ready to install.
- Single and double trash can units available.
- Base is constructed with a double wall heavy duty steel frame with edgebanded melamine bottom and back.
- Anthracite-colored base with grey 36 quart trash cans.
- Soft close full extension undermount glides, 110 lb. weight capacity.
- Integrated 6-way adjustable door mounting hardware allows for easy installation of all overlays and framing widths. Door not included.
- Floor mounted units can be easily installed in both framed and full access cabinetry, including Conestoga's Advantage Framed and Vesta Full Access Cabinet RTA lines.

Part No.	Size (WxHxD)	Fits Cab.	Min. Opening
503.15.221	Single can – 12" x 19-1/4" x 21-13/16"	15" Base	12"
503.15.222	Double – 14-3/4" x 19-1/4" x 21-13/16"	18" Base	14-3/4"

Please refer to pricing through Con-Nex, our online ordering program

Cabinet Accessories (continued)



Base Pull-Out Organizer with Blum Soft Close

- Base Pull-Out Organizer with Blum Soft Close units ship fully assembled, ready to install.
- Blum TANDEM full extension undermount glides with soft close feature, 100 lb. weight capacity.
- Each unit includes a wood frame with chrome wire side rails, one utensil bin, one knife bin and six removable dishwasher safe spice bins.
- Hard Maple TSCA compliant plywood construction with a semi-gloss finish.
- Adjustable door mounting brackets allow for easy installation and adjustment, regardless of overlay. Door not included.
- Units are floor mounted and compatible with Conestoga's Advantage framed and Vesta full access RTA cabinet lines.

Part No.	Size (WxHxD)	Fits Cabinet	Min. Opening
2105445A	8-5/8" x 19-3/8" x 21-21/32"	12" Base	9"



Ready to Install Base Pull-Out

- Ready to Install Base Pull-Out units ship fully assembled and include functional hardware and floor mounted cleats for easy installation.
- Designed for use with full height door base cabinets only.
- Soft close full extension undermount glides.
- Can be installed in both framed or frameless and overlay or inset cabinet applications.
- Unique top mount support bracket eliminates excessive side-to-side movement and sagging even when fully extended. 225lb. weight capacity.
- White Birch TSCA compliant plywood construction with a durable, UV topcoat.
- Integrated 6-way adjustable door mounting hardware allows for easy installation for all overlays and framing widths. Door not included.
- Floor mounted units can be easily installed in full height door framed or full access cabinetry, including Conestoga's Advantage and Vesta RTA lines.

Part No.	Size (WxHxD)	Fits Cabinet	Min. Opening
2100832A	5-1/2" x 24" x 22"	9" Base	5-1/2"
2100833A	8-1/2" x 24" x 22"	12" Base	8-1/2"
2100834A	11-1/2" x 24" x 22"	15" Base	11-1/2"
2100835A	14-1/2" x 24" x 22"	18" Base	14-1/2"

Please refer to pricing through Con-Nex, our online ordering program

Cabinet Accessories (continued)



Base Organizer Pull-Out with Soft Close

- Base Organizer Pull-Outs with Soft Close ships fully assembled and ready to install.
- Designed for use with full height door base cabinets only.
- Includes two fixed and two adjustable shelves with polish chrome side rails.
- Maple TSCA compliant plywood construction with durable polyurethane topcoat.
- Soft close full extension undermount BLUMOTION glides with 135 lb. weight capacity.
- Adjustable door mounting brackets allow for easy installation and adjustment, regardless of overlay. Door not included.
- Floor mounted units can be easily installed in both framed and full access cabinetry, including Conestoga's Advantage and Vesta RTA lines.

Part No.	Size (WxHxD)	Fits Cabinet	Min. Opening
2100987A	6" x 25-1/2" x 21-5/8"	9" Base	6"
2100988A	8-3/4" x 25-1/2" x 21-5/8"	12" Base	8-1/2"
2100989A	11-3/4" x 25-1/2" x 21-5/8"	15" Base	11-1/2"
2100990A	14-3/4" x 25-1/2" x 21-5/8"	18" Base	14-1/2"



Base Organizer Pull-Out

- Ready to Install Base Pull-Outs ship fully assembled and and ready to install.
- Designed for use in full height door cabinets only.
- Heavy duty top slide eliminates excessive side-to-side movement and sagging, even when fully extended.
- Soft close full extension undermount glides with 100 lb. weight capacity.
- Base Pull-Out units have two fixed and two adjustable shelves with polished chrome siderails.
- Maple TSCA compliant plywood construction with durable polyurethane topcoat.
- Integrated 6-way adjustable door mounting hardware allows for easy installation for all overlays and framing widths. Door not included.
- Floor mounted units can be easily installed in both framed and full access cabinetry, including Conestoga's Advantage and Vesta RTA lines.

Part No.	Size (WxHxD)	Fits Cabinet	Min. Opening
2100771A	5" x 25-1/2" x 22-1/2"	12" Base	5-1/2"
2100772A	8" x 25-1/2" x 22-1/2"	12" Base	8-1/2"
2100773A	11" x 25-1/2" x 22-1/2"	15" Base	11-1/2"

Please refer to pricing through Con-Nex, our online ordering program

Cabinet Accessories (continued)



Under Drawer Base Pull-Out

- Under Drawer Base Pull-Outs ship fully assembled and include drawer hardware and floor mounting cleats for quick and easy installation.
- Designed for use in base cabinets with functioning top drawer.
- Heavy duty top slide eliminates excessive side-to-side movement and sagging, even when fully extended.
- Soft close full extension undermount glides with 100 lb. weight capacity.
- Under Drawer Base Pull-Out units have two fixed and one adjustable shelf with polished chrome side rails.
- White Birch TSCA compliant plywood construction with durable UV topcoat.
- Integrated 6-way adjustable door mounting hardware allows for easy installation for all overlays and framing widths. Door not included.
- Floor mounted units can be easily installed in both framed and full access cabinetry, including Conestoga's Advantage and Vesta RTA lines.

Part No.	Size (WxHxD)	Fits Cabinet	Min. Opening
2103589A	5-7/16" x 20" x 22"	9" Base	5-1/2"
2103590A	8-7/16" x 20" x 22"	12" Base	8-1/2"





Base Organizer Swivel Pull-Out

- Base Organizer Swivel Pull-Outs ship fully assembled and ready to install.
- Features two indendently swiveling shelves to provide maximum access to stored contents. A built in self centering shelf system ensures proper alignment of shelves for easy closure. Polished chrome side rails keep stored items in place.
- Soft close full extension undermount BLUMOTION drawer glides with 135 lb. weight capacity.
- Maple TSCA compliant plywood construction with durable clear polyurethane finish.
- Adjustable door mounting brackets allow for easy installation and adjustment, regardless of overlay. Door not included.
- Floor mounted units can be easily installed in both framed and full access cabinetry, including Conestoga's Advantage and Vesta RTA lines.

Part No.	Size (WxHxD)	Fits Cabinet	Min. Opening
2101001A	5-3/4" x 25-5/8" x 22-25/32"	9" Base	5-3/4"
2101002A	8-3/4" x 25-5/8" x 22-25/32"	12" Base	8-3/4"

Please refer to pricing through Con-Nex, our online ordering program

Cabinet Accessories (continued)



Base Filler Pull-Out

- Base Filler Pull-Outs ship fully assembled and ready to install between adjacent cabinets. Base Filler Pull-Outs will not fit inside existing cabinetry.
- An overlay filler is required on face of the unit, not included.
- Base Filler Pull-Out unit includes one fixed and three adjustable shelves with polished chrome side rails to secure stored items.
- Includes full extension ball bearing top and bottom mount glides for stable operation.
- Maple TSCA compliant plywood construction with a durable polyurethane clear topcoat.
- Units can be easily installed between either framed or full access base cabinets, including Conestoga's Advantage and Vesta RTA lines.

	Description/Dimensions	
Part No.	Size (WxHxD)	# Shelves
2100750A	3" x 30" x 23"	4
2100751A	6" x 30" x 23"	4
2100979A	9" x 30" x 23"	4



Base Filler Pull-Out with Soft Close

- Base Filler Pull-Outs with Soft Close ship fully assembled and ready to install between adjacent cabinets. Units will not fit inside existing cabinetry.
- Overlay filler required on face of unit - not included.
- Base Filler Pull-Outs with Soft Close includes one fixed and three adjustable shelves with polished chrome side rails.
- Soft close full extension undermount glides with 75 lb. weight capacity.
- Maple TSCA compliant plywood construction with durable polyurethane topcoat.
- Units can be easily installed between either framed or full access base cabinets, including Conestoga's Advantage and Vesta RTA lines.

Part No.	Size (WxDxH)	# Shelves
2100980A	3" x 30" x 23"	4
2100981A	6" x 30" x 23"	4
2100982A	9" x 30" x 23"	4

Please refer to pricing through Con-Nex, our online ordering program

Cabinet Accessories (continued)



Ready to Install Base Filler Pull-Out

- Ready to Install Base Filler Pull-Out units ship as a fully assembled cabinet and is designed to mount between adjacent cabinets. Will not fit inside base cabinets.
- Features a top-mounting bracket to eliminate side-to-side movement and sagging, even when fully extended.
- An overlay filler is required on the face of this unit, not included.
- Soft close full extension undermount glides with 100 lb. weight capacity.
- Includes two fixed and two adjustable storage shelves with polished chrome side rails.
- White Birch TSCA compliant plywood construction with a durable UV topcoat.
- Integrated 6-way adjustable door mounting hardware allows for easy installation. Door not included.
- Can be easily mounted between framed or full access cabinetry, including Conestoga's Advantage and Vesta RTA lines.

Part No.	Size (WxHxD)	# Shelves
2103641A	3-1/2" x 30" x 23"	4
2103642A	6-1/2" x 30" x 23"	4



Ready to Install Magnetic Knife Organizer Pull-Out

- Magnetic Knife Organizer Pull-Outs ship fully assembled and include drawer hardware and floor mounting cleats for quick and easy installation.
- Features a top-mounting bracket to eliminate excessive side-to-side movement and sagging, even when fully extended.
- Soft close full extension undermount glides with 100 lb. weight capacity.
- Double sided magnetic bar protects knife blades while maximizing cabinet storage. Accommodates cutlery up to 15" in length. Additional shorter knife storage in rear receptacle.
- Each Magnetic Knife Organizer comes with a dishwasher safe plastic cutting board.
- White Birch TSCA compliant plywood construction with a durable UV topcoat.
- Integrated 6-way adjustable door mounting hardware allows for easy installation for all overlays and framing widths. Door not included.
- Can be installed in both framed and full access cabinetry, including Conestoga's Advantage and Vesta RTA lines.

Part No.	Size (WxDxH)	Fits Cabinet	Min. Opening
2103638A	5" x 24" x 22"	9" Base	5-1/2"
2103639A	8" x 24" x 22"	12" Base	8-1/2"

Please refer to pricing through Con-Nex, our online ordering program

Cabinet Accessories (continued)



Base Knife Block and Utensil Storage Pull-Out

- Base Knife Block and Utensil Storage units come fully assembled and ready to install.
- Full extension BLUMOTION soft close undermount glides with 135 lb. weight capacity.
- Knife Storage features flex rod technology. Knives can be randomly inserted in any direction, including diagonally.
- Removable stainless steel utensil storage receptacles for ease of cleaning.
- Includes 4 multi-colored dishwasher safe cutting mats.
- Maple TSCA compliant plywood construction with durable polyurethane finish.
- Adjustable door mounting brackets allow for easy installation, regardless of overlay. Door not included.
- Floor mounted units can be easily installed in both framed and full access cabinetry, including Conestoga's Advantage and Vesta RTA lines.

Part No.	Size (WxHxD)	Fits Cabinet	Min. Opening
2100991A	6" x 25-1/2" x 21-5/8"	9" Base	5-1/2"
2100992A	7-1/8" x 25-1/2" x 21-5/8"	12" Base	7-1/2"
2100993A	8-3/4" x 25-1/2" x 21-5/8"	12" Base	8-3/4"
2100994A	10-1/8" x 25-1/2" x 21-5/8"	15" Base	10-1/2"
2100995A	11-3/4" x 25-1/2" x 21-5/8"	15" Base	11-1/2"



Base Paper Towel Holder Organizer Pull-Out

- Base Paper Towel Organizer comes assembled and ready for installation.
- Full extension, soft close BLUMOTION drawer glides with 110 lb. weight capacity.
- Adjustable rub bushings minimize side-to-side movement, even when fully extended.
- Maple TSCA compliant plywood construction with durable polyurethane finish.
- Adjustable door mounting brackets allow for easy installation, regardless of overlay. Door not included.
- Floor mounted units can be easily installed in both framed and full access full height door cabinetry, including Conestoga's Advantage and Vesta RTA lines.

Part No.	Size (WxHxD)	Fits Cabinet	Min. Opening
2100999A	6-7/8" x 26-29/32" x 21-23/32"	12" Base	6-7/8"
2101000A	8-3/4" x 26-29/32" x 21-23/32"	12" Base	8-3/4"

Please refer to pricing through Con-Nex, our online ordering program

Cabinet Accessories (continued)



Ready to Install Utensil Base Pull-Out

- Utensil Base Pull-Outs ship fully assembled and include drawer hardware and floor mounting cleats for quick and easy installation.
- Features a top-mounting bracket to eliminate side-to-side movement and sagging, even when fully extended.
- Full extension soft close undermount glides with 100 lb. weight capacity.
- Each unit contains four stainless steel removable utensil storage bins and one fixed shelf.
- White Birch TSCA compliant plywood construction with a durable UV topcoat.
- Integrated 6-way adjustable door mounting hardware allows for easy installation for all overlays and framing widths. Door not included.
- Floor mounted units can be easily installed in both framed and full access, full height door cabinetry, including Conestoga's Advantage and Vesta RTA lines.

Part No.	Size (W x H x D)	Fits Cabinet	Min. Opening
2103640A	5-1/2" x 24" x 22"	9" Base	5-1/2"
2103588A	8-1/2" x 24-1/8" x 22"	12" Base	8-1/2"



Base Utensil Pull-Out

- Base Utensil Pull-Outs ship fully assembled and ready to install.
- Soft close full extension undermount BLUMOTION drawer glides with 135 lb. weight capacity.
- Stainless Steel Utensil Storage Bins are removable for easy cleaning. 6" and 8-3/4" wide units include three storage bins, 11-3/4" wide unit includes 6 storage bins. All units also include two shelves.
- Maple TSCA compliant plywood construction with durable clear polyurethane finish.
- Adjustable door mounting brackets allow for easy installation and adjustment, regardless of overlay. Door not included.
- Floor mounted units can be easily installed in both framed and full access cabinetry, including Conestoga's Advantage and Vesta RTA lines.

Part No.	Size (WxHxD)	Fits Cabinet	Min. Opening
2100996A	6" x 25-1/2" x 21-5/8"	9" Base	6"
2100997A	8-3/4" x 25-1/2" x 21-5/8"	12" Base	8-1/2"
2100998A	11-3/4" x 25-1/2" x 21-5/8"	15" Base	11-1/2"

Please refer to pricing through Con-Nex, our online ordering program

Cabinet Accessories (continued)



Two-Tier Cookware Organizers Base Pull-Out

- Two-Tier Cookware Organizer Base Pull-Outs ship fully assembled and include drawer hardware and floor mounting cleats for quick and easy installation.
- Bottom, side and rear mounting for complete stability.
- Units can be installed in base cabinets with a functioning top drawer or full height door.
- Soft close full extension ball bearing glides with 100 lb. weight capacity.
- Heavy duty polished chrome wire racks operate independently to provide maximum access to pans and lids.
- Optional adjustable door mounting hardware allows for easy installation for all overlays and framing widths. Order door mounting kit, part# 2105409A. Door not included.
- Can be easily installed in framed or full access cabinetry, including Conestoga's Advantage and Vesta RTA lines.

Part No.	Size (WxHxD)	Fits Cabinet	Min. Opening
2100767A	11-3/4" x 18" x 22"	15" Base	11-3/4"
2100768A	20-3/4" x 18-1/8" x 22"	24" Base	20-3/4"
2105409A	1-1/2" x 8" x 2-1/8"	All	11-3/4"



Base Pull-Out Unit with Tray Divider & Foil Wrap Holder

- Base Pull-Out Units with Tray Dividers & Foil Wrap Holders ship fully assembled and ready to install.
- Soft close BLUMOTION full extension undermount glides with 135 lb. weight capacity.
- Two dividers with polished chrome side rails.
- Maple TSCA compliant plywood construction with durable polyurethane topcoat.
- Adjustable door mounting brackets allow for easy installation and adjustment, regardless of overlay. Door not included.
- Floor mounted units can be easily installed in both framed and full access cabinetry, including Conestoga's Advantage and Vesta RTA lines.

Part No.	Size (WxHxD)	Fits Cabinet	Min. Opening
2100983A	5-15/16" x 19-1/2" x 21-21/32"	9" Base	6"
2100984A	7-1/8" x 19-1/2" x 21-21/32"	12" Base	7-1/2"
2100985A	8-23/32" x 19-1/2" x 21-21/32"	12" Base	8-3/4"
2100986A	10-1/8" x 19-1/2" x 21-21/32"	15" Base	10-1/2"

Please refer to pricing through Con-Nex, our online ordering program

Cabinet Accessories (continued)



Ready to Install Tray Divider Pull-Out

- Ready to Install Tray Divider Pull-Outs ship fully assembled and include drawer hardware and floor mounting cleats for quick and easy installation.
- Stores and organizes bakeware, serving trays and more, providing easy access.
- Removable center rack and adjustable dividers allow you to customize the storage space to best fit your needs.
- Non-slip mat on unit bottom prevents stored items from moving and reduces noise.
- Installation hardware eliminates sagging and side-to-side movement, even when fully extended.
- Can be used under functional top drawer or in full height door cabinet configurations.
- Soft close full extension undermount glides with 100 lb. weight capacity.
- White Birch TSCA compliant plywood construction with a durable UV topcoat.
- Integrated 6-way adjustable door mounting hardware allows for easy installation for all overlays and framing widths. Door not included.
- Floor mounted units can be easily installed in framed or full access cabinetry, including Conestoga's Advantage and Vesta RTA lines.

Part No.	Size (WxHxD)	Fits Cabinet	Min. Opening
2103663A	5" x 17-9/16" x 22-1/4"	9" Base	5-1/2"
2103664A	8" x 17-9/16" x 22-1/4"	12" Base	8-1/2"



Base Tray Roll-Out

- Base Tray Roll-Out units are fully assembled and includes drawer hardware and floor mounting cleats for quick and easy installation.

  Note: Special lower hinge location is required to provide adequate clearance for 3-1/2" high front of unit. Will not function with concealed inset hinges.
- Side mount full extension KV glides.
- 5" unit comes with 1 tray divider, 8" unit with 2 tray dividers and 11" unit with 3 tray dividers.
- Maple TSCA compliant plywood construction with a durable UV topcoat.
- Floor mounted units can be easily installed in both framed and full access cabinetry, including Conestoga's Advantage and Vesta RTA lines.

Part No.	Size (WxHxD)	Fits Cabinet	Min. Opening
2100791A	5" x 10" x 21-3/4"	9" Base	6"
2100792A	8" x 10" x 21-3/4"	12" Base	9"
2100793A	11" x 10" x 21-3/4"	15" Base	12"

Please refer to pricing through Con-Nex, our online ordering program

Cabinet Accessories (continued)



U-Shaped Tray Divider

- U-Shaped Tray Divider ships fully assembled and ready to install.
- Wire unit with polished chrome finish.
- Sold individually, each tray divider provides 3" of storage space. Multiple units can be mounted adjacent to each other for use in wider cabinets.
- Floor or shelf mounted units can be easily installed in base framed and full access cabinetry, including Conestoga's Advantage and Vesta RTA lines.

Part No.	Size (WxHxD)	Fits Cabinet	Min. Opening
2100765A	3" x 10" x 11-7/8	9" Base	3-1/4"



Single Drawer Cookware Roll-Out

- Single Drawer Cookware Roll-Outs ship fully assembled and ready to install. Floor mounting hardware and drawer glides included.
- Soft close full extension undermount glides with 100 lb. weight capacity.
- Ideal for organizing and storing cutting boards, cookware, pots & pans, lids and more.
- Dividers are adjustable and can be easily repositioned to accommodate stored items.
- White Birch TSCA compliant plywood dovetail construction with a durable UV topcoat.
- Floor mounted units can be easily installed in framed or full access cabinetry, including Conestoga's Advantage and Vesta RTA lines.

Part No.	Size (WxHxD)	Fits Cabinet	Min. Opening
2103654A	13-9/16" x 9-1/16" x 22-3/8"	18" Base	15"
2103655A	19-1/8" x 9-1/16" x 22-3/8"	24" Base	21"
2103656A	25-1/8" x 9-1/16" x 22-3/8"	30" Base	27"

Please refer to pricing through Con-Nex, our online ordering program

Cabinet Accessories (continued)



Double Drawer Cookware Storage Roll-Out

- Double Drawer Cookware Roll-Outs ship fully assembled and include drawer hardware and floor mounting cleats for quick and easy installation.
- Double Drawer Cookware Storage units include a top drawer that operates independently from the bottom drawer, allowing for maximum space utilization and access.
- Soft close full extension undermount glides with 100 lb. weight capacity.
- Ideal for organizing and storing cutting boards, cookware, pots & pans, lids and more.
- Dividers are adjustable and can be easily repositioned to accommodate various stored items.
- White Birch TSCA compliant plywood dovetail construction with a durable UV topcoat.
- Floor mounted units can be easily installed in framed or full access cabinetry, including Conestoga's Advantage and Vesta RTA lines.

Part No.	Size (WxHxD)	Fits Cabinet	Min. Opening
2103657A	13-9/16" x 19-1/16" x 22-3/8"	18" Base	15"
2103658A	19-1/8" x 19-1/16" x 22-3/8"	24" Base	21"
2103659A	25-1/8" x 19-1/16" x 22-3/8"	30" Base	27"

Please refer to pricing through Con-Nex, our online ordering program

Cabinet Accessories (continued)



Double Drawer Bottle Storage Roll-Out

- Double Drawer Bottle Storage Roll-Outs ship fully assembled and include drawer hardware and floor mounting cleats for quick and easy installation.
- Soft close full extension undermount glides with 100 lb. weight capacity.
- Double Drawer Bottle Storage Unit includes a top drawer that operates independently from the bottom drawer, allowing for maximum space utilization and access.
- Ideal for organizing and storing water bottles, wine bottles and more.
- All units come with a 15 opening storage grid that can accommodate bottles up to 4" in diameter. 21" and 27" units also come with additional vertical dividers for larger bottles or other storage items.
  - 18" Base, part #2103660A: 4 openings of middle row accomodate 4" diameter containers. 4 openings of outer rows accomodate 3-3/8" diameter containers. Back row accomodates 3" diameter containers.
- Bottle storage grids can be positioned on the right or left side of the 21" and 27" drawer units.
- White Birch TSCA compliant plywood dovetail construction with a durable UV topcoat.
- Floor mounted units can be easily installed in framed or full access cabinetry, including Conestoga's Advantage and Vesta RTA lines.

Part No.	Size (WxDxH)	Fits Cabinet	Min. Opening
2103660A	13-9/16" x 19-1/16" x 22-3/8"	18" Base	15"
2103661A	19-1/8" x 19-1/16" x 22-3/8"	24" Base	21"
2103662A	25-1/8" x 19-1/16" x 22-3/8"	30" Base	27"

Please refer to pricing through Con-Nex, our online ordering program

Cabinet Accessories (continued)





Girasolo Blind Corner Optimizer

- Girasolo Blind Corner Optimizer units provide a unique way to utilize the storage area within blind base corner cabinets.
- Revolutionary in design, Girasolo Blind Corner shelving provides the maximum surface area while allowing swing out shelves to fully function in openings as narrow as 12" in width.
- A single pivot post makes installation quick and easy, with just 8 installation screws.
- The unique pull-out motion limits interferance with adjacent cabinets.
- Soft open and close system ensures smooth, quiet operation.
- Each unit includes two Maple patterned TSCA compliant swing-out shelves. To secure stored items, side rail options include metal or wood.
- Adjustable height shelves, each with 44 lb. weight capacity.
- Girasolo Blind Corner units can be installed in both framed and full access cabinetry, including Conestoga's Advantage and Vesta RTA lines.

Part No.	Size (WxHxD)	Door Position	Fits Cabinet	Min. Opening Framed	Min. Opening Full Acess
2100528A	33-1/2" x 30-11/16" x 14"	Left	Blind Base	12"	13-1/2"
2100529A	33-1/2" x 30-11/16" x 14"	Right	Blind Base	12"	13-1/2"
2100530A	36-1/4" x 30-11/16" x 16"	Left	Blind Base	15"	16-1/2"
2100531A	36-1/4" x 30-11/16" x 16"	Right	Blind Base	15"	16-1/2"
2100532A	38-1/4" x 30-11/16" x 18"	Left	Blind Base	18"	19-1/2"
2100533A	38-1/4" x 30-11/16" x 18"	Right	Blind Base	18"	19-1/2"
Wooden Side Rails					
2105447A	32-23/32" x 30-1/2" x 14-3/8"	Left	Blind Base	12"	13-1/2"
2105446A	33-1/16" x 30-11/16" x 14-9/16"	Right	Blind Base	12"	13-1/2"
2105449A	35-1/2" x 30-1/2" x 18-15/32"	Left	Blind Base	15"	16-1/2"
2105448A	35-13/16" x 30-11/16" x 16-5/8"	Right	Blind Base	15"	16-1/2"
2105451A	38-13/32" x 30-23/32" x 18-15/32"	Left	Blind Base	18"	19-1/2"
2105450A	37-31/32" x 30-11/16" x 18-1/32"	Right	Blind Base	18"	19-1/2"

Please refer to pricing through Con-Nex, our online ordering program

Cabinet Accessories (continued)



LeMans II Corner Swing-Out Shelves

- Lemans II Corner Swing-Out Shelves are designed to be installed in blind corner base cabinets with either functional top drawer or full height door.
- Unit includes two Maple patterned non-slip swing out shelves with platinum colored metal side rails and platinum colored posts.
- Shelves are adjustable in height in 2" increments.
- 55 lb. per shelf weight capacity.
- Can be retrofitted into existing blind corner cabinetry.
- Units can be installed in both framed and full access cabinetry, including Conestoga's Advantage and Vesta RTA lines.

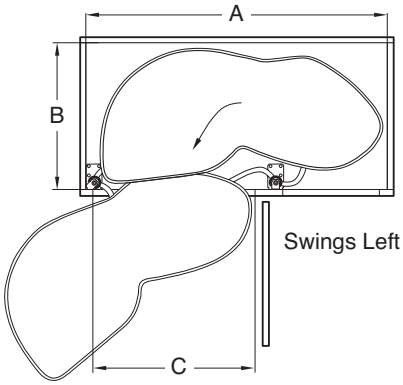

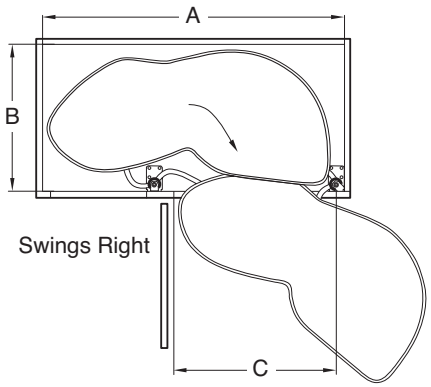

Part Number	Shelf Size	Interior Width A	Interior Depth B	Opening Width (Framed) C	Opening Width (Frameless) C	Swing
541.32.445	15"	32-1/4"	21"	16-1/8"	17-1/8"	Right
541.32.446	15"	32-1/4"	21"	16-1/8"	17-1/8"	Left
541.32.450	18"	36-1/4"	21"	17-3/4"	18-3/4"	Right
541.32.451	18"	36-1/4"	21"	17-3/4"	18-3/4"	Left
541.32.460	21"	38"	21"	21-1/4"	22-1/4"	Right
541.32.461	21"	38"	21"	21-1/4"	22-1/4"	Left

Please refer to pricing through Con-Nex, our online ordering program

Cabinet Accessories (continued)



Blind Corner Organizer Pull-Out

- Blind Corner Organizer Pull-Outs include drawer hardware and floor mounting cleats for quick and easy installation. Minor pre-installation assembly is required.
- Full access pull-out units provide maximum utilization of difficult to reach areas within blind base corner cabinetry.
- Universal design allows unit to be installed for either left or right handed applications.
- 20-9/16" high units can be used with under a functional top drawer. 24-1/16" high units must be used with a full height door cabinet.
- Constructed from heavy duty polished chrome welded flat wire with solid shelf bottoms.
- Each unit includes four polished chrome, flat wire baskets. Additional baskets sold separately.
- Soft close full extension ball bearing glides with 130 lb. weight capacity.
- Integrated 6-way adjustable door mounting hardware allows for easy installation for all overlays and framing widths. Door not included.
- Floor mounted units can be easily installed in framed or full access cabinetry, including Conestoga's Advantage and Vesta RTA lines.

Part No.	Size (WxHxD)	Fits Cabinet	Min. Opening
2103669A	26-13/16" x 20-9/16" x 22-1/8"	Blind Base	14-1/2"
2103670A	26-13/16" x 24-1/16" x 22-1/8"	Blind Base	15"
2103671A	12-3/16" x 3-9/16" x 15-9/16"	2-Baskets	15"
2103672A	32-7/8" x 20-9/16" x 22-1/8"	Blind Base	17-1/2"
2103673A	32-7/8" x 24-1/16" x 22-1/8"	Blind Base	18"
2103674A	15-3/16" x 3-9/16" x 15-9/16"	2-Baskets	18"

Please refer to pricing through Con-Nex, our online ordering program

Cabinet Accessories (continued)



Solid Bottom Blind Corner Optimizer Pull-Out

- Blind Corner Optimizer Pull-Outs include hardware for floor mounted installation. Minor pre-installation assembly is required.
- Blind corner pull-outs maximize space utilization in blind corner cabinetry, allowing accessability to the entire unit. When shelves are fully extended outside the cabinet, the top shelf can be pushed back into the cabinet to provide full access to items on the bottom shelf.
- Universal design allows unit to be installed for either left or right handed application.
- Can be installed in cabinet with a functional top drawer or in a full height door blind base corner cabinet.
- Pull-out shelves include a silver steel frame and polished chrome wire surround with non-slip Maple patterned TSCA compliant bottom.
- Soft close heavy duty ball bearing glides.
- Floor mounted units can be easily installed in framed or full access blind cabinetry, including Conestoga's Advantage and Vesta RTA lines.

Part No.	Size (WxHxD)	Fits Cabinet	Min. Opening
2101003A	26-13/16" x 23-1/2" x 20-13/32"	Blind Base	15"
2101004A	32-1/4" x 23-1/2" x 20-13/32"	Blind Base	18"



Blind Corner Base Pull-Out System

- Blind Corner Base Pull-Outs include hardware for floor mounted installation. Minor pre-installation assembly is required.
- Blind Corner Base unit extends out of cabinet opening, then swings to the side, allowing the second set of shelves to pull forward, providing full access to all shelving and contents.
- Designed to be installed in blind base corner cabinets with a functioning top drawer or full height door.
- Piano hinge on swing out unit is reversible, allowing left or right installation applications.
- Maple TSCA compliant 1/2" plywood construction with a clear, durable topcoat.
- Unit can be installed in both framed and full access cabinetry, including Conestoga's Advantage and Vesta RTA lines.

Part No.	Size (WxHxD)	Fits Cabinet	Min. Opening
2100790A	34-3/4" x 19-9/16" X 22-7/16"	Blind Base	15"

Please refer to pricing through Con-Nex, our online ordering program

Cabinet Accessories (continued)



Wood Half Moon Lazy Susan



Plastic Half Moon Lazy Susan

Half Moon Lazy Susan Shelf System

- Half Moon Lazy Susan Shelf Systems are designed to fit into blind base cabinetry, providing increased access to stored items in rescessed areas.
- Half Moon shelves operate individually, swinging out of the cabinet, then sliding forward to provide full access to the entire shelf depth.
- Wood shelf kits are constructed from Maple TSCA compliant plywood with a clear polyurethane finish. Each wood shelf kit includes two plywood shelves with supports, a 17" chrome plated shaft with aluminum bearings, two positioning bases, two pairs of ball bearing slides and an installation template.
- Plastic shelf kits are molded from white polypropylene material. Each polymeric shelf kit includes two shelves with supports, a 15-7/8" polished chrome plated shaft with aluminum bearings, two positioning bases, two pairs of ball bearing slides and an installation template.
- Half Moon Shelves are universal and can be installed to swing left or right.
- Half Moon Shelf units can be installed in both framed and full access cabinetry, including Conestoga's Advantage and Vesta RTA lines.

Part No.	Size (WxHxD)	Fits Cabinet	Min. Opening
2103591A	Wood Shelves 32-1/4"x 16" x 14-5/32"	Blind Base	12"
2103592A	Wood Shelves 35"x 16" x 17-5/32"	Blind Base	15"
2103593A	Wood Shelves 37-3/4" x 16" x 20-3/16"	Blind Base	18"
2103594A	Polymer Shelves 31-7/16" x 15-15/16" x 15-1/4"	Blind Base	13-1/4"
2103595A	Polymer Shelves 33" x 15-15/16" x 18-11/32"	Blind Base	16-1/8"
2103596A	Polymer Shelves 39-11/32" x 15-15/16" x 21-5/8"	Blind Base	19-1/4"

Please refer to pricing through Con-Nex, our online ordering program

Cabinet Accessories (continued)





Wood Rim Lazy Susan Shelves

- Wood Rim Lazy Susan Shelves ship ready to install into corner cabinetry on fixed or adjustable shelving, and onto cabinet floor.
- Each Lazy Susan Shelf includes a pre-mounted center ring bearing.
- Constructed from 1/2" Maple TSCA compliant plywood bottom surrounded by a 1-1/2" high wood laminated rim with a durable clear finish. No finger joints.
- Wood Rim Lazy Susan Shelves sold individually.
- Wood Rim Lazy Susan Shelves can be installed in both framed and full access Wall and Base Corner cabinetry, including Conestoga's Advantage and Vesta RTA lines.

Part No.	Size(WxHxD)	Description
2100053A	18" x 1-1/2" x 18"	18" Full Round Wood Lazy Susan
2100051A	32" x 1-1/2" x 32"	32" Full Round Wood Lazy Susan
2100052A	28" x 1-1/2" x 28"	28" Kidney Wood Lazy Susan
2100050A	32" x 1-1/2" x 32"	32" Kidney Wood Lazy Susan

Please refer to pricing through Con-Nex, our online ordering program

Cabinet Accessories (continued)



Metal Pull-Out Baskets with Optional Pilasters

- Metal Pull-Out Baskets are sold individually and can be floor mounted to the cabinet bottom, or installed in conjunction with the optional Pilaster Set. Each basket includes a removable grey acrylic bottom liner to provide a flat, sturdy storage surface.
- Metal Pilaster Set, sold separately contains four pilasters to be attached to the interior end panels near each corner.
- If using multiple pull-out baskets in a base cabinet, order one pilaster set. If installing in a pantry cabinet, order two or more pilaster sets, mounting additional pilaster sets above the lower pilasters. Connectors included.
- Baskets sold in quantity of one.
- Both the heavy duty flat wire pull-out baskets and pilaster sets have a polished chrome finish.
- Soft close full extention ball bearing glides with 130 lb. per basket weight capacity.
- Pilaster sets and pull-out baskets can be easily installed in framed or full access cabinetry, including Conestoga's Advantage and Vesta RTA lines.

Part No.	Description	Size (WxHxD)	Fits Cabinet	Min. Opening
2103665A	Pilaster Set	1-1/4" x 21-1/2" x 1/2"	Base/Pantry Cabinetry	NA
2103666A	Pull-Out Basket	14-1/2" x 4-1/4" x 22"	18" Base/Pantry	14-1/2"
2103667A	Pull-Out Basket	19-9/16" x 5-7/16" x 22-1/16"	24" Base/Pantry	20-1/2"
2103668A	Pull-Out Basket	25-9/16" x 5-7/16" x 22-1/16"	30" Base/Pantry	26-1/2"

Please refer to pricing through Con-Nex, our online ordering program

Cabinet Accessories (continued)





Heavy Duty Mixer Lift

- Heavy Duty Mixer Lift units can be ordered as Hardware Only Kit, or as a Soft Close Hardware with shelf.
- Soft close unit includes solid Maple shelf with a clear polyurethane finish. 11-3/4" x 1-3/8" x 20" shelf.
- Both kits feature built-in shock dampeners and adjustable spring tension with 60 lb. weight capacity.
- Hardware Only Kit does not include a shelf or soft close feature.
- Hardware color of both units is silver.
- Heavy Duty Mixer Lift can be installed in both framed and full access cabinetry, including Conestoga's Advantage and Vesta RTA lines.

Part No.	Description	Fits Cabinet	Min. Opening
2100774A	Hardware only, No Shelf	15" to 24" Base	12"
2101005A	Soft Close Hardware w/Shelf	18" Base	15"



Wall Organizer Pull-Out

- Wall Organizer Pull-Outs ship fully assembled and ready to install.
- Includes floor mounted full extension undermount glides.
- Wall Organizers feature one fixed and three adjustable shelves with chrome side rails to secure stored items.
- Constructed from Maple TSCA compliant plywood with a durable clear polyurethane finish.
- Adjustable door mounting brackets allow the easy installation and adjustment, regardless of overlay. Door not included.
- Wall Organizer units can be installed in both framed or full access wall cabinets, including Conestoga's Advantage and Vesta RTA lines.

Part No.	Size (WxHxD)	Fits Cabinet	Min. Opening
2100778A	5" x 26-1/4" x 10-3/4"	Wall 930	5-1/2"
2100779A	8" x 26-1/4" x 10-3/4"	Wall 1230	8-1/2"

Please refer to pricing through Con-Nex, our online ordering program

Cabinet Accessories (continued)



Tiered Wall Filler Pull-Out

- Tiered Wall Filler Pull-Outs come in a variety of heights, ship fully assembled and ready to install between adjacent cabinets. Tiered Wall units will not fit inside existing cabinetry.
- An overlay filler is required on face of the unit, not included.
- Each Tiered Wall unit includes adjustable shelves with polished chrome side rails to secure stored items.
- Includes full extension ball bearing top and bottom glides for a smooth, stable operation.
- Maple TSCA compliant plywood construction with a durable polyurethane clear topcoat.
- Units can be easily installed between either framed or full access wall cabinets, including Conestoga's Advantage and Vesta RTA lines.

Part No.	Size (WxDxH)	# Shelves
2100752A	3" x 30" x 11-1/8"	4
2100753A	6" x 30" x 11-1/8"	4
2100754A	3" x 36" x 11-1/8"	5
2100755A	6" x 36" x 11-1/8"	5
2100756A	3" x 42" x 11-1/8"	6
2100757A	6" x 42" x 11-1/8"	6

Please refer to pricing through Con-Nex, our online ordering program

Cabinet Accessories (continued)



(Optional Grooming Organizer shown)

Vanity Base Pull-Out

- Vanity Base Pull-Outs ship fully assembled and includes floor mounting cleats for quick installation.
- Heavy duty top slide eliminates excessive side to side movement and sagging, even when fully extended.
- Soft close full extension undermount glides rated for 100 lb. weight capacity.
- Vanity Pull-Out unit has two fixed and one adjustable shelf.
- White Birch TSCA compliant plywood construction with a durable UV topcoat.
- Accomodates an optional Grooming Organizer and Acrylic Tray Insert.
- Integrated 6-way adjustable door mounting hardware allows for easy installation for all overlays and framing widths. Door not included.
- Floor mounted vanity units can be easily installed in both framed and full access cabinetry, including Conestoga's Advantage and Vesta 21" deep vanity RTA lines.



Grooming Organizer

- Grooming Organizer ships fully assembled. Simply place on the top shelf of Vanity Base Pull-Out unit.
- Includes one 3" and two 2" stainless canisters with heat shields to prevent heat from transfering to surrounding surfaces.
- Features dividers for appliance cords and two open storage trays on top of unit for additional organization.
- White Birch TSCA compliant plywood construction with a durable UV topcoat.



Acrylic Tray Insert

- Clear Acrylic Tray Insert is sized to fit on top of Vanity Base Pull-Out unit and can be used in conjunction with Grooming Organizer.
- Acrylic Tray is divided into four compartments and can be conveniently lifted out of the Vanity Base Pull-Out.

Part No.	Description	Size (WxHxD)	Fits Cabinet	Min. Opening
2103585A	Vanity Base Pull-Out	8-13/32" x 19-7/8" x 18-13/16"	12" Vanity	9"
2103586A	Grooming Organizer	8" x 5" x 9"	12" Vanity	9"
2103587A	Acrylic Tray Insert	8-13/32" x 3-7/16"	12" Vanity	9"

Please refer to pricing through Con-Nex, our online ordering program

Cabinet Accessories (continued)



Sink Front Tip Out Tray Kit

- Sink Front Tip Out Trays provide convenient storage behind Sink Base false drawer fronts.
- Each Tip Out Tray Kit includes one open tray and one soap dish tray with integrated ring post. Kits include two pairs of spring loaded sissor style mounting hinges.
- Choice of Almond or White high impact polystyrene trays.
- Can be mounted individually behind narrower drawer fronts or in tandem behind a single wider drawer front. Check sink dimensions to ensure there is adequate clearance.
- Can be easily installed in framed or full access cabinetry, including Conestoga's Advantage and Vesta RTA lines.

Part No.	Color	Size (WxHxD)	Fits Cabinet	Min. Opening
2100769A	Almond	11" x 3-13/16" x 2-1/8"	Sink Base 30	13-1/4"
2100770A	Almond	14" x 3-13/16" x 2-1/8"	Sink Base 36	16-1/4"
2100977A	White	11" x 3-13/16" X 2-1/8"	Sink Base 30	13-1/4"
2100978A	White	14" x 3-13/16" x 2-1/8"	Sink Base 36	16-1/4"



Under-Sink Mat

- Under Sink Mat can be installed into Sink Base cabinets right out of the package. Simply trim to the desired size and drop into place.
- Can be trimmed to size on the back of the mat with a straight edge and sharp utility knife, or on a table saw.
- Recessed dimples can hold up to 1-gallon of liquid per six square feet.
- Constructed from polystyrene material with a grey/stainless finish.
- Protective Under Sink Mat can be installed in both framed and full access Sink Base and Vanity Sink Base cabinetry, including Conestoga's Advantage and Vesta RTA lines.

Part No.	Size (WxD)	Fits Cabinet
547.91.550	45-1/4" x 24-5/8"	Sink Base - Trim to Fit

Please refer to pricing through Con-Nex, our online ordering program

Cabinet Accessories (continued)



Sink Base Drip Tray

- Sink Base Drip Trays ship ready to install right out of the package. If required, simply trim the flexible thermoplastic liners to the desired size and set in place.
- Drip trays can be easily trimmed to size with scissors. Up to 3" can be trimmed from width and 2" trimmed from depth.
- Sink Base Drip Trays can be installed into both framed and full access Sink Base cabinetry, including Conestoga's Advantage and Vesta RTA lines.

Part No.	Size (WxD)	Fits Cabinet
2101006A	28-1/2" x 23-1/4"	27" & 30" Sink Base
2101007A	34-1/2" x 23-1/4"	33" & 36" Sink Base
2101008A	40-1/2" x 23-1/4"	39" & 42" Sink Base



File Drawer Support System

- File Drawer Support Systems are designed to fit inside deep drawers to accommodate hanging file folders.
- Rail length can be trimmed to fit custom sized cabinets.
- Smaller support accommodates letter size hanging files.
- Larger support accomodates legal size hanging files.
- Wire frame construction with black finish.
- File folders and drawer front not included.

Part No.	Size (WxHxD)	Fits Cabinet
2100775A	13" x 9-3/4" x 19-1/4"	18" Deep Drawer
2100776A	15-7/8" x 9-3/4" x 19-1/4"	21" Deep Drawer

Please refer to pricing through Con-Nex, our online ordering program

Cabinet Accessories (continued)

Lattice Wine Rack Design/Size		
Model	**Size**	**Bottle Openings**
Standard	17" x 36"	14
	24" x 30"	18
	24" x 43"	28
Square	17" x 36"	14
	23" x 29"	18
	23" x 42"	28
Deluxe	17" x 36"	14
	23" x 29"	18
	23" x 42"	28

Lattice Wine Racks

- Sold in pairs only.
- All lattice designs are available in Cherry and Hard Maple.
- Trimmable in length and width - must remove equal amounts from ends or top and bottom.
- Standard rack bottle openings are 4" x 4".
- Square and Deluxe bottle openings are 3-3/4" x 3-3/4".
- Available unfinished or finished. See Finishing Program Section for pricing.

Standard

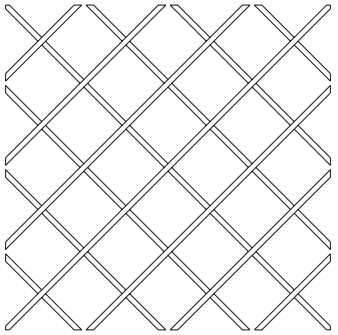

Standard
cross section

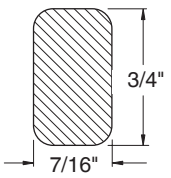

Square

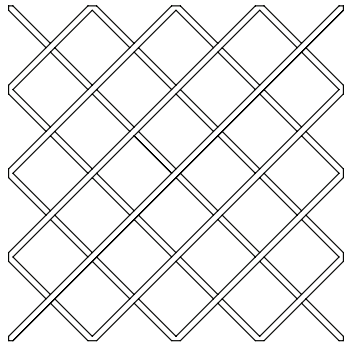

Square
cross section

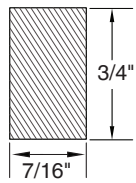

Deluxe

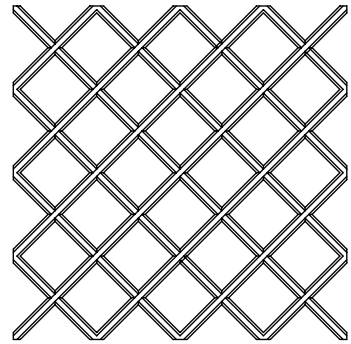

Deluxe
cross section

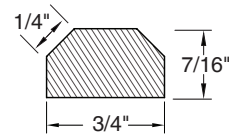

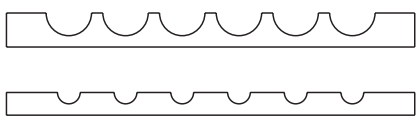

Half Round Wine Racks

- Design Charge Material Category B.
- Use 1.25 sq. ft. to calculate 30" racks and 1.50 sq. ft. to calculate 36" racks.
- Available in all Category B published species.
- Sold in pairs (front and back).
- 3/4" thick only, 30" or 36" length.
- Front is 2" high, back is 3" high.
- Bottle cut-outs start 3" from end on 30" and 3-1/2" from end on 36".
- 30" holds 5 bottles, 36" holds 6 bottles.
- Horizontal grain direction only.
- Available unfinished or finished. See Finishing Program Section for pricing.

Please refer to pricing through Con-Nex, our online ordering program

Cabinet Accessories (continued)

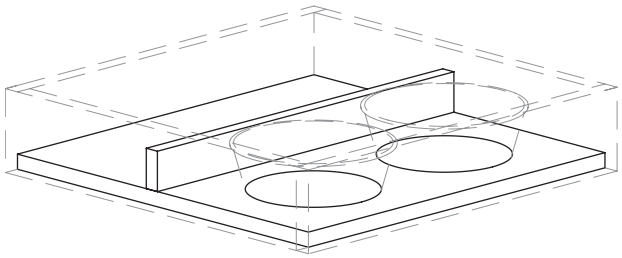

Pet Insert

- Can be sized to fit a specific drawer box or ordered separately. If ordered separately, specify width and depth.
- Available in Hard Maple and Natural Birch.
- 3/4" thick Natural Birch plywood insert and divider.
- Insert accommodates 5", 6-1/2" and 7-3/8" diameter bowls (not included). Bowls are available at most pet stores.
- Not intended to accommodate water bowls.
- 2" high plywood divider is shipped loose. Plywood base plate is pre-drilled with pilot holes for divider installation.
- Available in drawer box depths between 18" to 21".

Single cut-out:

Natural Birch Hard Maple

Minimum width: 12-3/4".

Maximum width: 18".

Double cut-out:

Natural Birch Hard Maple

Minimum width: 15".

Maximum width: 36."

Closet Accessory Program



Oval Wardrobe Tube and Accessories

- Unique oval design provides support for hanging clothes in closets and tall utility cabinets.
- Wardrobe Tube can be easily trimmed to length using a hacksaw.
- Wardrobe Tube Supports are required for wall to wall, between closet panels or inside cabinet installation applications.
- Surface Mount Center Supports are required on longer wardrobe tube spans or when using full length tubes.
- End Caps are used to cover cut exposed ends or when not using Wardrobe Tube Supports.
- Wardrobe Tube, Tube Supports, Oval Bracket Surface Mount and End Cap have a polished Chrome finish.



Oval Bracket
Surface Mount



End Cap



Tube Support

Part No.	Description
801.13.244	Oval Wardrobe Tube – 47-15/16" x 1-3/16" x 9/16" – Chrome – comes with 2 supports
802.04.208	Oval Bracket Surface Mount – Chrome – 1-13/16" high
802.05.295	End Cap – Chrome – 1-3/16" high

Please refer to pricing through Con-Nex, our online ordering program

Custom Valances - Special Designs

Conestoga offers a wide variety of arched panel configurations and options. Valances illustrated on the following pages represent popular custom arched panel designs. The manufacturing of custom valances is based off of customer-supplied dimensioned drawings. **If any of the following illustrations below match the look you desire, please copy the appropriate page, designate the necessary dimensions and forward it to Customer Service.**

- Arched panel valances are available in most mortise and tenon and miter designs. Applied moulding designs, while commonly available, depend on the radius of the panel.
- Design options include, but are not limited to all published panel raises and framing beads, edge profiles, grooved panels, wide framing, and custom rise dimensions.
- A CAD drawing will be created prior to the manufacturing of any custom arched panel. After a review and sign off by the customer, the drawing must be returned to Special Designs in order for production to begin. Lead-time calculations will not begin until Conestoga has received an approved drawing.
- Framing widths will match door style selected unless otherwise noted by customer.
- Please provide all necessary dimensions when ordering.

Design Option A

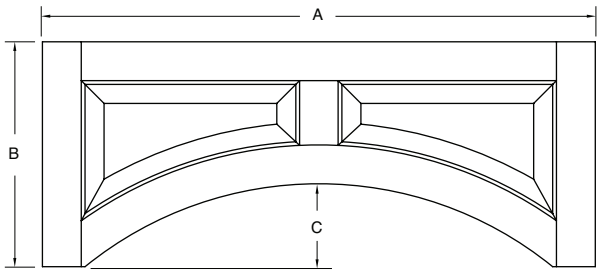

Sizes	
A	
B	
C	
Grain Direction	
	Vertical		Horizontal

Design Option B

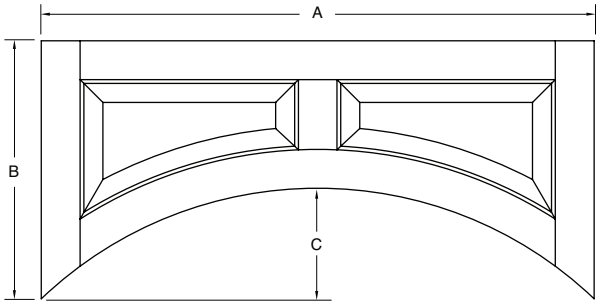

Sizes	
A	
B	
C	
Grain Direction	
	Vertical		Horizontal

Design Option C

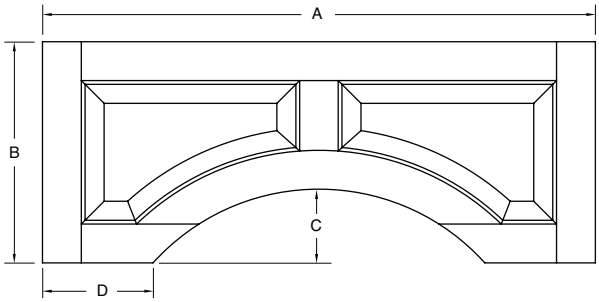

Sizes	
A	
B	
C	
D	
Grain Direction	
	Vertical		Horizontal

CONESTOGA™ WOOD SPECIALTIES

Custom Valances - Special Designs (continued)

Design Option D

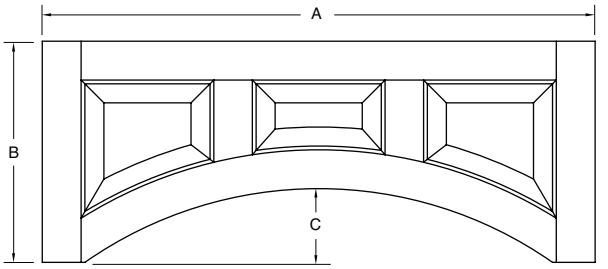

Sizes	
A	
B	
C	
Grain Direction	
	Vertical ☐ Horizontal

Design Option E (horizontal grain only)

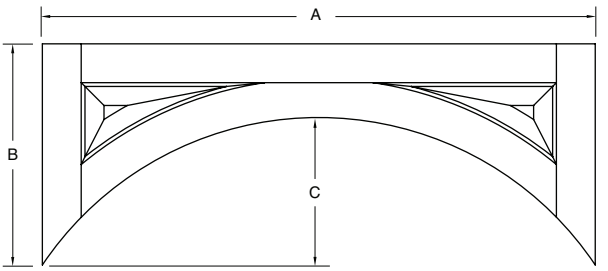

Sizes	
A	
B	
C	

Horizontal grain direction only.

Design Option F

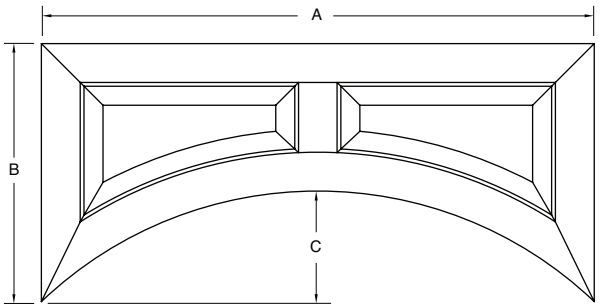

Sizes	
A	
B	
C	
Grain Direction	
	Vertical ☐ Horizontal

Design Option G (applied moulding)

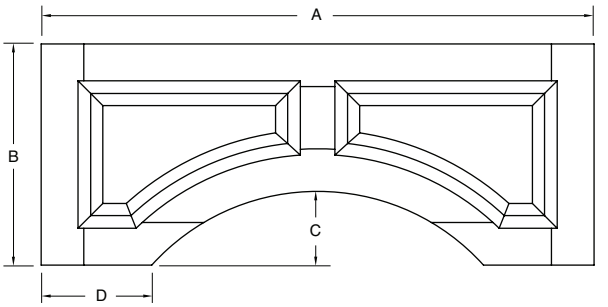

Sizes	
A	
B	
C	
D	
Grain Direction	
	Vertical ☐ Horizontal

Design Option H (available with or without applied moulding)

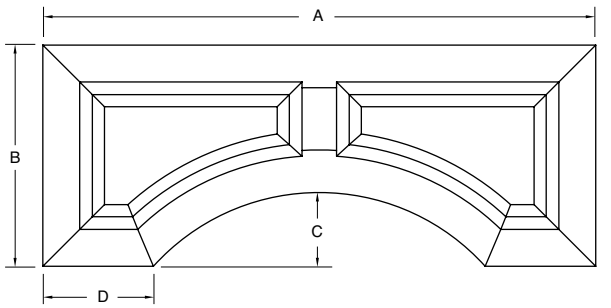

Sizes	
A	
B	
C	
D	
Grain Direction	
	Vertical ☐ Horizontal

Standard Arched Valances

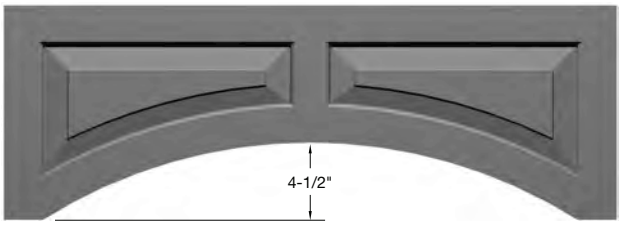

Arched Valance

Valances 30" to 48" – Design Charge

Valances 51" to 72" – Design Charge

- Standard Arched Raised Panel Valances are available in three inch wide increments from 30" to 72" only.
- Minimum size – 30" wide x 12-1/2" high. Maximum size – 72" wide x 30" high. Framing widths: 2-3/4" stiles, 2-5/16" rails, 2-1/2" center stile. The rise is always 4-1/2", regardless of valance width.
- Horizontal grain panels are standard, vertical grain is available with a list per valance upcharge.
- Design standard as shown. Individual designs, including applied moulding, must be ordered through Special Designs.

Offering And Availability	
Species	
Material Pricing Guide	All 3/4" and 1" species available except Rustic Knotty.
Edge Profiles	
pg 7.1	Machine Edge only.
Framing Beads	
pg 7.2	All 3/4" and 1" available.
Panel Raises	
pg 7.2A	All 3/4" and 1" available.
Options	
pgs 7.3-7.15	Available with pegs, distressing, cross grain sanding, wear sanding, putty pin holes, weathered grain and cut down in width only.

Standard 1-Piece Valances

- 1-Piece Valances are available in 4-1/2" to 6" heights except Traditional Arch which is available in 6" height only.
- 1-Piece Valance pricing is determined using design plus material calculations. See the drawings below to determine appropriate Design Charge. Calculate overall square footage of valances and refer to Category B of the specie desired in the Material Pricing Guide to determine Material Charge.



Classic Arch

Valances 21" to 60" – Design Charge
Valances 60-1/16" to 96"– Design Charge



Elegant Arch

Valances 21" to 60" – Design Charge
Valances 60-1/16" to 96"– Design Charge

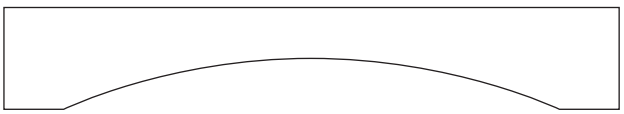

Roman Arch

Valances 12" to 60" – Design Charge
Valances 60-1/16" to 96"– Design Charge



Straight

Valances 12" to 60" – Design Charge
Valances 60-1/16" to 96"– Design Charge

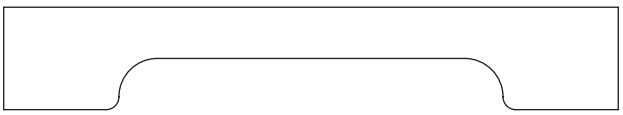

Traditional Arch

Valances 16" to 60" – Design Charge
Valances 60-1/16" to 96"– Design Charge

Edge Profile Options

- Straight valance comes standard with Machine Edge, but is available with any edge profile. Specify which edges receive an edge profile, other than Machine Edge.
- Roman Arch valance and Traditional Arch valance come standard with Machine Edge. These valances are available with edge profiles: B-2, C-2, CFP-2, E-2, H-2, J-2, L-059, L-120, L-149, L-281, L-382, L-772, L-803, L-1160, LC-2, PRS-2, RC-2 and V-2. Specify which edges receive profiles other than Machine Edge.
- Classic Arch valance and Elegant Arch valance are available with a Machine Edge only.
- See matrix on next page to determine pattern related dimensions.

Standard 1-Piece Valances (continued)

Valance Matrix Instructions

Use the matrix below to determine the specifications for patterned valances. Find the desired valance length in one of the C rows. The top number (white numbers in black) in the column with the desired length is the pattern length. The pattern will be centered on the valance.

From the C block containing the desired overall valance length, the extreme right number in that row, which is under column B is the size of the flat areas on the left and right side of the pattern.

Example: If ordering a Traditional Arch valance with an overall length of 30" (dimension C), note that:

- 30" appears in the sixth C row, fourth column of the matrix.
- Referring to the top of the column, in row A, a pattern length of 19" will be found.
- Referring back to the 30" C row, at the right end of the row, in column B, flat areas of 5-1/2" on both the left and right ends of the valance will be found.
- The selected 30" valance will have a pattern 19" wide, centered on the valance, with 5-1/2" wide flat areas at both ends of the valance.

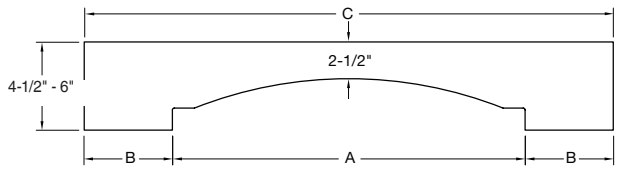

Classic Arch

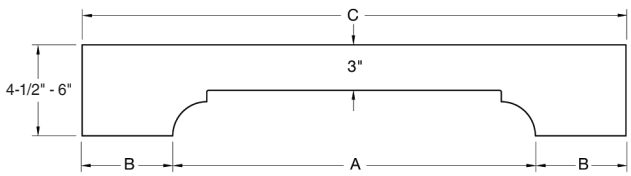

Elegant Arch

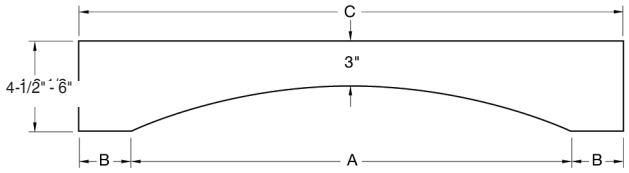

Roman Arch

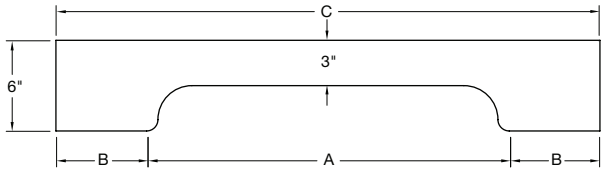

Traditional Arch

Valance Matrix											
A*	9"	11"	14"	19"	24"	30"	42"	54"	66"	78"	B
C	15"	17"	NA	NA	NA	NA	NA	NA	NA	NA	3"
C	16"	18"	21"	26"	31"	37"	49"	61"	73"	85"	3-1/2"
C	NA	19"	22"	27"	32"	38"	50"	62"	74"	86"	4"
C	NA	20"	23"	28"	33"	39"	51"	63"	75"	87"	4-1/2"
C	NA	NA	24"	29"	34"	40"	52"	64"	76"	88"	5"
C	NA	NA	25"	30"	35"	41"	53"	65"	77"	89"	5-1/2"
C	NA	NA	NA	NA	36"	42"	54"	66"	78"	90"	6"
C	NA	NA	NA	NA	NA	43"	55"	67"	79"	91"	6-1/2"
C	NA	NA	NA	NA	NA	44"	56"	68"	80"	92"	7"
C	NA	NA	NA	NA	NA	45"	57"	69"	81"	93"	7-1/2"
C	NA	NA	NA	NA	NA	46"	58"	70"	82"	94"	8"
C	NA	NA	NA	NA	NA	47"	59"	71"	83"	95"	8-1/2"
C	NA	NA	NA	NA	NA	48"	60"	72"	84"	96"	9"

***Note:** Dimensions above are based on a 6" height. Any increment 1/2" or less round down to nearest measurement in row “A”. Any increment 9/16" or greater round up to nearest measurement in row “A”.

Slab Fillers

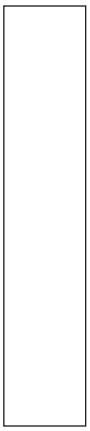

Slab Filler

- Slab fillers can be ordered in widths from 1-1/2" to 48" and heights from 4-1/2" to 96". Available in all 3/4" and 1" species.
- All 3/4" and 1" edge profiles are available.
- Slab fillers are available with pegs, radius corners, grooves, back-routed hand pulls, distressing, wear sanding and weathered grain.

Solid Wood 1-Piece Slab Design Upcharges						
	Length/Width					
Width/Length	**Min to 39-15/16"**	**40" to 54-15/16"**	**55" to 79-15/16"**	**80" to 99-15/16"**	**100" to 119-15/16"***	**120"to 144"†**
Min to 11-15/16"	Slab Design Charge	Slab Design Charge	Slab Design Charge +	Slab Design Charge +	Slab Design Charge +	Slab Design Charge +
12" to 20-15/16"	Slab Design Charge	Slab Design Charge	Slab Design Charge +	Slab Design Charge +	Slab Design Charge +	Slab Design Charge +
21" to 35-15/16"	Slab Design Charge	Slab Design Charge +	Slab Design Charge +	Slab Design Charge +	Slab Design Charge +	Slab Design Charge +

Any solid wood Slab products exceeding 35-15/16" in width (across the grain) will be quoted by Special Designs.
***100 to 119-15/16" specie availability:** 3/4" thick species include Cherry, Hard Maple, Hickory, Paint Grade Hard Maple, Quarter Sawn White Oak, Red Oak, Rift Cut White Oak, Rustic Knotty Cherry, Rustic Knotty Hard Maple, Soft Maple, Walnut and White Oak. 1" thick species (1" upcharge applies) include Cherry, Hard Maple, Red Oak and Soft Maple.
†**120" to 144" specie availability:** 3/4" thick species include Cherry, Hard Maple, Hickory, Paint Grade Hard Maple, Quarter Sawn White Oak, Red Oak, Rift Cut White Oak, Soft Maple, Walnut, White Birch and White Oak. 1" thick species (1" upcharge applies) include Cherry, Hard Maple, Paint Grade Hard Maple and Soft Maple.

Glass Shelves



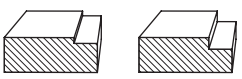

1/8" depth 1/4" depth

Grafton

8" x 12"
2" Framing

- Used in conjunction with a frame only door or a Wire Grille Insert.
- Allows light to flow through the entire cabinet, accentuating fine dinnerware, glassware or other collectibles.
- All 3/4" and 1" species available.
- Maximum size – 23-15/16" deep x 36" long.
- Edge profiles – defaults to machine edge on all 4 edges. Additional edge profiles include B-2, C-2, CFP-2, H-2, J-2, L-034, L-059, L-149, L-382, L-803, L-1160, LC-2 and PRS-2.
- Two framed options accept either 1/8" or 1/4" glass (glass not included).

Fluted Fillers

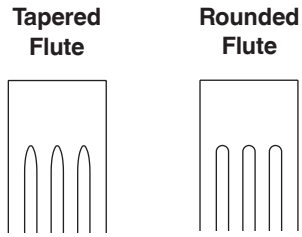

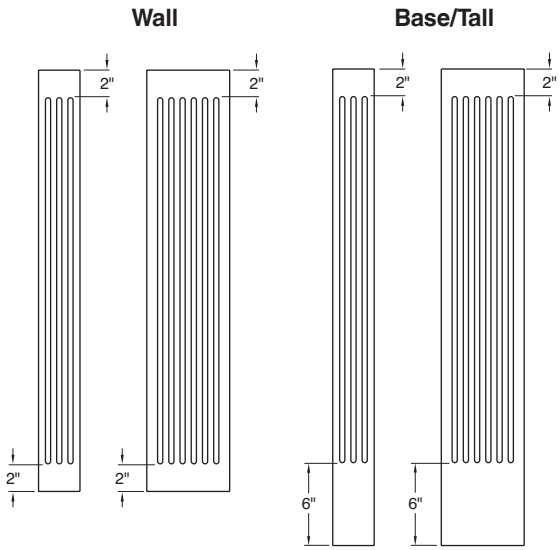

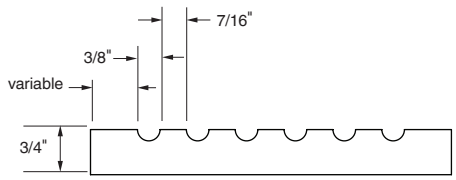

Section view

- Fluted Fillers can be ordered in custom widths from 3" to 15-15/16" and heights up to 96" in all standard 3/4" species.
- Choose from either Tapered or Rounded flutes. If not specified, flutes will be produced using the Tapered design.
- Non-fluted or “flat” areas are design specific, but can be customized to meet your design needs. Simply specify the flat dimensions desired. Specify “Flats to measure 0” to extend flutes the entire length of filler.
- Fluted Filler pricing is determined using design plus material calculations. See the chart below to determine appropriate Design Charge. Calculate overall square footage of filler and refer to category B of the specie desired in the Material Pricing Guide to determine Material Charge.
- The number of flutes per filler width is indicated in the chart below. Custom flute spacing is available through Special Designs.

Fluted Filler Pricing

Filler Width	# Flutes	Under 60" in length	60" or greater in length
3" to 3-15/16"	3		
4" to 4-15/16"	4		
5" to 5-15/16"	5		
6" to 6-15/16"	6		
7" to 7-15/16"	7		
8" to 8-15/16"	9		
9" to 9-15/16"	10		
10" to 10-15/16"	11		
11" to 11-15/16"	12		
12" to 12-15/16"	14		
13" to 13-15/16"	15		
14" to 14-15/16"	16		
15" to 15-15/16"	17		

Edge Profile Options

- Fluted Fillers come standard with a Machine Edge, but can be ordered with a variety of edge profiles including B-2, C-2, LC-2, L-034, L-059, L-149, L-253, L-382, L-686, L-1160, PRS-2, RC-2 and V-2.
- Beveled edge profile selections include the L-991 (45 degree back bevel) and the L-423 (22-1/2 degree back bevel).
- Premium edge profiles include the L-297, L-304 and LC-Inset edge. Upcharge applies.

Wood Floating Shelves

The Floating Shelf is a functional way to add style to the interior décor of kitchens, bathrooms and other living areas throughout a home. These shelves have a support frame that must be mounted securely to the studs in the wall, then the exterior portion of the shelf slides over the support frame to completely conceal the sub-structure. The result is an attractive, fashionable shelf to display pictures, dishware and other interior design accents.

Mini Plain, Plain, Beaded and Crown Floating Shelves

- Available species include Cherry, Hard Maple, Paint Grade Hard Maple Hybrid, Quarter Sawn White Oak, Rift Cut Red Oak, Rift Cut White Oak, Red Oak and Walnut.
- The front and sides of the shelves are made from 3/4" solid hardwoods, mitered at the two front corners.
- The Beaded Floating Shelf includes a decorative bead on both the top and bottom of the front and side returns.
- The Crown Floating Shelf includes a modified crown moulding on the front and side returns.
- The shelf top and bottom is 3/8" thick plywood, matching the specie of the hardwood, except for Paint Grade Hard Maple Hybrid, which uses 3/8" MDF for the shelf top and bottom.
- Once the Floating Shelf is fully installed, it is recommended that the shelf be secured to the support frame using headless pins or small finishing nails so the shelf cannot inadvertently slide off of the support frame.
- Custom lengths available. Pricing rounded to next largest published size plus an additional

Support Frame

- Manufactured using 3/4" thick unselected hardwoods.
- It is imperative that Floating Shelves be mounted to the recommended number of wall studs using two or more coarse thread screws at least 2-1/2" in length per stud. The 6” and 12” Floating Shelves should be mounted to one or more wall stud, the 24” to 48” Floating Shelves should be mounted to two or more studs, the 60" Floating Shelf should be mounted to three or more studs, the 72" and 84" Floating Shelves should be mounted to four or more studs.
- Maximum load capacity for the shelf and support frame is 10 lbs. per linear foot. While Floating Shelves are built from strong, sturdy materials, the load capacity of these shelves is dependent upon the quality of the installation screws and whether the shelves are secured into the wall studs. If not secured into the recommended number of studs using two or more high quality installation screws per stud, the shelf may not support the desired weight. Conestoga will not be responsible for shelf failure due to inadequate installation techniques or materials.
- All models of Wood Floating Shelves are available with primers, wiping stains, Truetones, Colourtones, Prism Paints and glazes.
- Finish pricing: Design Charge multiplier – 1.5x
  Material Charge – actual sq. footage x 1.25

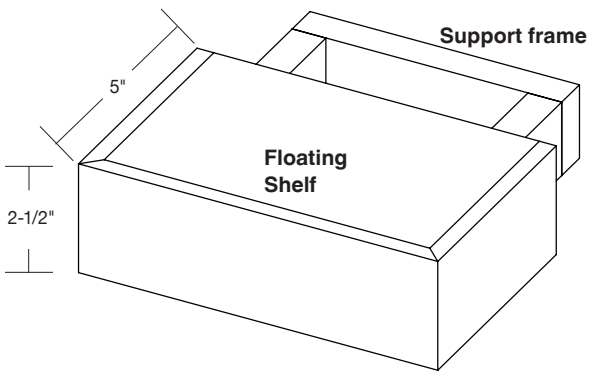

Mini Plain Floating Shelf (Includes Design & Material Charge)		
Specie	**6"**	**12"**
Cherry		
Maple, Hard		
Oak, Red		
Oak, Red, Rift Cut		
Oak, White, Quarter Sawn		
Oak, White, Rift Cut		
Paint Grade Hard Maple Hybrid		
Walnut		

Wood Floating Shelves (continued)

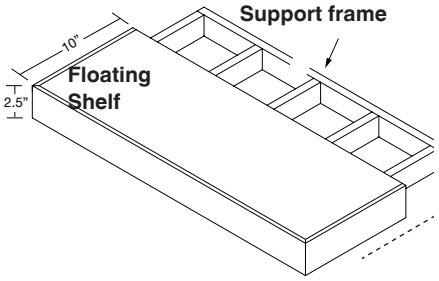

Plain Floating Shelf (Includes Design & Material Charge)							
Specie	**24" or 30"**	**36"**	**42"**	**48"**	**60"**	**72"**	**84"**
Cherry							
Maple, Hard							
Oak, Red							
Oak, Red, Rift Cut							
Oak, White, Quarter Sawn							
Oak, White, Rift Cut							
Paint Grade Hard Maple Hybrid							
Walnut							

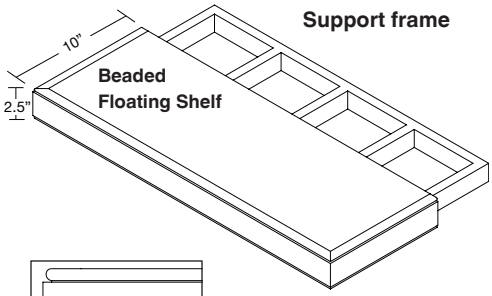

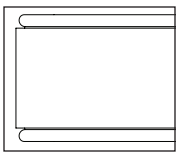

Beaded Floating Shelf - Side View

Beaded Floating Shelf (Includes Design & Material Charge)							
Specie	**24" or 30"**	**36"**	**42"**	**48"**	**60"**	**72"**	**84"**
Cherry							
Maple, Hard							
Oak, Red							
Oak, Red, Rift Cut							
Oak, White, Quarter Sawn							
Oak, White, Rift Cut							
Paint Grade Hard Maple Hybrid							
Walnut							

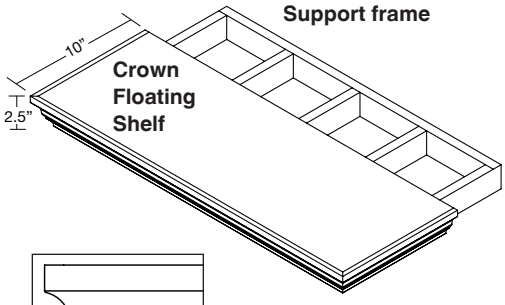

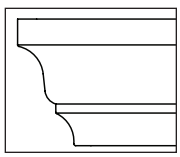

Crown Floating Shelf Side View

Crown Floating Shelf (Includes Design & Material Charge)							
Specie	**24" or 30"**	**36"**	**42"**	**48"**	**60"**	**72"**	**84"**
Cherry							
Maple, Hard							
Oak, Red							
Oak, Red, Rift Cut							
Oak, White, Quarter Sawn							
Oak, White, Rift Cut							
Paint Grade Hard Maple Hybrid							
Walnut							

Wood Floating Shelves (continued)

Scribable Floating Shelves

The Scribable Floating Shelf is a functional way to add style to the interior décor of kitchens, bathrooms and other living areas throughout a home. These shelves provide an extra 3/8" of trimmable material on the back to allow for installation on any surface. This shelf also offers a Scribable Side Option, ideal for a built-in look that brings elegance and flair to any home.

Scribable Floating Shelf

- These shelves include a scribable back that can be trimmed up to 3/8" to allow a flush, gap-free installation.
- Scribable Side Option available. This option provides one end that is scribable up to 3/8" in addition to the scribable back.
- The front and sides of the shelves are made from ¾" solid hardwoods, mitered at the two front corners.
- If Scribable Side Option is selected, only one front corner is mitered.
- The shelf top and bottom is 3/8" thick plywood, matching the specie of the hardwood, except for Paint Grade Hard Maple Hybrid, which uses 3/8" MDF for the shelf top and bottom.
- Once the Floating Shelf is installed, it is recommended that the shelf be secured to the support frame using headless pins or small finishing nails so the shelf cannot inadvertently slide off of the support frame.
- Custom lengths available. Pricing rounded to next largest published size plus an additional .
- See support frame information on page 11.8.

IMPORTANT NOTICE: Use caution when scribing floating shelves.

When scribing the back or side of the floating shelf to ensure a snug fit against walls, excercise caution and use appropriate, sharp tools. Improper or dull tools may cause damage to the shelf's finish,including chipping, flaking or scratching. Conestoga will not be responsible for any damages to the shelf or finish resulting from the scribing process.

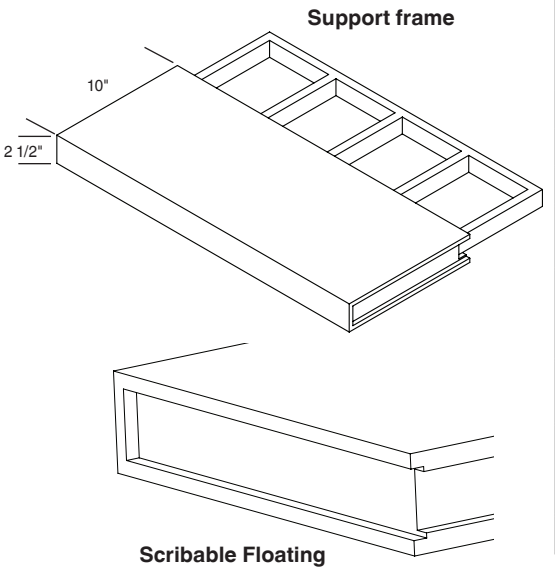

Scribable Floating Shelf –Side View

Scribable Floating Shelf (Includes Design & Material Charge)							
Specie	24" or 30"	36"	42"	48"	60"	72"	84"
Cherry							
Maple, Hard							
Oak, Red							
Oak, Red, Rift Cut							
Oak, White, Quarter Sawn							
Oak, White, Rift Cut							
Paint Grade Hard Maple Hybrid							
Walnut							

Wood Floating Shelves (continued)

Solid Wood Floating Shelves

Solid Wood Floating Shelves provide a functional way to add elegance and flair into any room within the home. Each solid wood shelf is produced from North American hardwoods and machined with a series of unique contoured patterns across the front and both side edges, providing the look of live-edge shelving, but with shorter lead-times and at a fraction of the cost.

Solid Wood Floating Shelf

- Solid Wood Floating Shelves are available in 24”, 30” and 36” lengths. Custom lengths not available.
- Each Solid Wood Floating Shelf is produced from domestic hardwoods and shipped ready for installation.
- Each shelf includes six 2-1/2” hex head lag screws, and installation instructions.
- The edges of the front and both sides are machined in one of three different randomly selected contoured patterns.
- The back of the shelf is routed and bored to accept and completely conceal the steel hanging bracket, allowing the shelf to fit flush against the wall.
- Solid Wood Floating Shelves are 1-3/4” thick and a depth reaching 10” at its deepest point. Due to the decorative contours machined into the front edge of the shelf there are areas that will be less than 10” in depth.
- All of Conestoga’s stains, paints, primers and glazed finishes are eligible.
- Finish pricing: Design Charge multiplier: 1.5x. Material Charge: actual sq. footage x 1.25.

Support Bracket

- Manufactured using high strength raw steel.
- 24" and 30" support brackets utilize two round steel support rods, 36" support brackets utilize three round support rods.
- A small rare earth magnet is attached to the shelf back, which secures the shelf to the support bracket.
- It is imperative that support brackets be mounted to two wall studs using the six 2-1/2” long hex head lag screws included with the shelf.
- Maximum load capacity for the shelf and support bracket is 25 lbs. per linear foot. The load capacity of these shelves is dependent upon whether the support bracket is properly secured to the wall studs and the shelf. If the shelf is not secured to the support bracket properly, or the shelf is not secured into two wall studs using the six 2-1/2” long hex head lag screws, the shelf will not support the desired weight. Conestoga will not be responsible for shelf failure due to inadequate installation techniques or materials.





Solid Wood Floating Shelf				
Specie		24"	30"	36"
Cherry	Price			
	Part Number	2200292A	2200296A	2200300A
Maple, Hard	Price			
	Part Number	2200295A	2200299A	2200303A
Oak, White	Price			
	Part Number	2200293A	2200297A	2200301A
Walnut	Price			
	Part Number	2200294A	2200298A	2200302A

Alternative Material Floating Shelves (continued)

Super Matte Floating Shelves

- Available in select Super Matte colors – see pricing chart below.
- The front and sides of the shelf are made from 3/4" edgebanded material, mitered at the two front corners.
- The shelf top and bottom is 6mm thick Super Matte material.
- Once the Floating Shelf is fully installed, it is recommended that the shelf be secured to the support frame using headless pins, small screws or small finishing nails so the shelf cannot inadvertently slide off of the support frame.
-

Support Frame

- Manufactured using 3/4" thick unselected hardwoods.
- It is imperative that Floating Shelves be mounted to two or more wall studs using four or more coarse thread screws at least 2-1/2" in length. The 60" Floating Shelf should be mounted to three or more studs.

- Maximum load capacity for the shelf and support frame is 10 pounds per linear foot. While Super Matte Floating Shelves are built from strong, sturdy materials, the load capacity of these shelves is dependent upon the quality of the installation screws and whether the shelves are secured into the wall studs. If not secured to two or more studs using two or more high quality installation screws per stud, the shelf may not support the desired weight. Conestoga will not be responsible for shelf failure due to inadequate installation techniques or materials.

Super Matte Floating Shelf					
Colors	**24" or 30"**	**36"**	**42"**	**48"**	**60"**
Anthracite Matte, Black Matte, Light Grey Matte, White Matte					

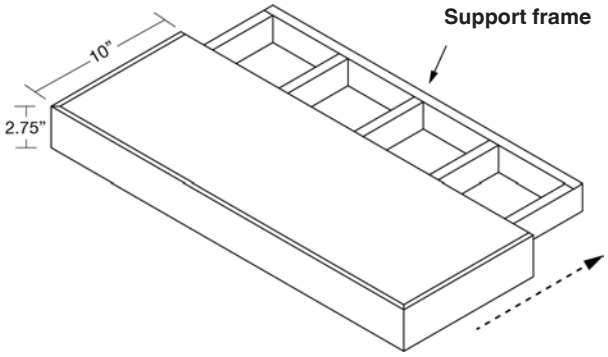

Alternative Material Floating Shelves (continued)

Thermally Textured Surface Floating Shelves

- Available in all Intrigue, Strata and Vogue TTS materials - see pricing charts below.
- The front and sides of the shelf are made from 3/4" banded TTS material, mitered at the two front corners.
- The shelf top and bottom is 8mm thick TTS material, except Intrigue which utilizes 1/4" material.
- Once the Floating Shelf is fully installed, it is recommended that the shelf be secured to the support frame using headless pins, small screws or small finishing nails so the shelf cannot inadvertently slide off of the support frame.
- Custom lengths available - pricing rounded to next largest published size, plus an additional charge.

Support Frame

- Manufactured using 3/4" thick unselected hardwoods.
- It is imperative that Floating Shelves be mounted to two or more wall studs using four or more coarse thread screws at least 2-1/2" in length. The 60" Floating Shelf should be mounted to three or more studs.

- Maximum load capacity for the shelf and support frame is 10 pounds per linear foot. While TTS Floating Shelves are built from strong, sturdy materials, the load capacity of these shelves is dependent on upon the quality of the installation screws and whether the shelves are secured into the wall studs. If not secured to two or more studs using two or more high quality installation screws per stud, the shelf may not support the desired weight. Conestoga will not be responsible for shelf failure due to inadequate installation techniques or materials.

Strata Floating Shelf					
Tier 1	**24" or 30"**	**36"**	**42"**	**48"**	**60"**
Aspen Oak (LM67), Barn Oak (LN27), Bianco (BO11), Carbone (LM08), City Oak (LM69), Graphite (LG18), Oregon Pine (LK84), Palissandro (LK55), Swiss Almond (LM96), Vineyard Oak (LN30)					
Tier 3					
Cypress Point (SO13), Light Carbon (SO15), Nero (U129), Silver Sand (SO11)					

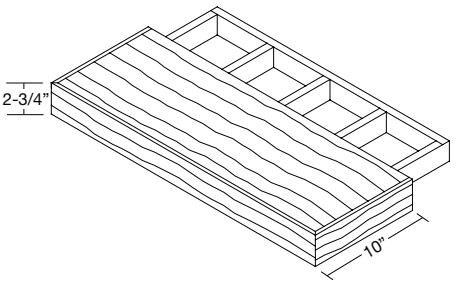

Vogue Floating Shelf					
Colors	**24" or 30"**	**36"**	**42"**	**48"**	**60"**
Essenza Oak (631B) Fresno Glacial (16N), Nogal Slow (5AE), Roble Aurora (98V), Roble Azabache (75V), Roble Colorado (97V), Roble Denver (84V), Roble Eternity (4AE), Roble Joplin (17N), Roble Stella (74V) Roble Trigo (42B) Sostanza Oak (632B)					

Intrigue Floating Shelf					
Colors	**24" or 30"**	**36"**	**42"**	**48"**	**60"**
Carbon Frozen Wood (H1292), Grey Vicenza Oak (H3158), Natural Carini Walnut (H3710), Stone Grey Frozen Wood (H1288), White Frozen Wood (H1290)					

Alternative Material Floating Shelves (continued)

Decorative Laminate Veneer Floating Shelves

- Available in all Allure colors - see pricing chart below.
- The front and sides of the shelf are made from 3/4" banded DLV material, mitered at the two front corners.
    - Bright White and White Dove, front of shelf and edges are manufactured using 19mm DLV board; Canadian Grey, Clearwater Oak, Dering Forest, Helena Walnut, Monaco, Ocala Walnut, Sabine Walnut, Valley Forge Elm, White Chocolate and White Cypress. Shelves are manufactured using DLV center panel material sandwiched to 1/2" MDF, then edgebanded. Interior of sandwiched material is raw MDF.
- The shelf top and bottom utilizes DLV center panel material.
- Once the Floating Shelf is fully installed, it is recommended that the shelf be secured to the support frame using headless pins, small screws or small finishing nails so the shelf cannot inadvertently slide off of the support frame.
- Custom lengths available - pricing rounded to next largest published size, plus an additional charge.

Support Frame

- Manufactured using 3/4" thick unselected hardwoods.
- It is imperative that Floating Shelves be mounted to two or more wall studs using four or more coarse thread screws at least 2-1/2" in length. The 60" Floating Shelf should be mounted to three or more studs.
- Maximum load capacity for the shelf and support frame is 10 pounds per linear foot. While DLV Floating Shelves are built from strong, sturdy materials, the load capacity of these shelves is dependent on upon the quality of the installation screws and whether the shelves are secured into the wall studs. If not secured to two or more studs using two or more high quality installation screws per stud, the shelf may not support the desired weight. Conestoga will not be responsible for shelf failure due to inadequate installation techniques or materials.

Allure DLV Floating Shelf					
Colors	**24" or 30"**	**36"**	**42"**	**48"**	**60"**
Bright White					
White Dove					
Canadian Grey					
Clearwater Oak					
Dering Forest					
Helena Walnut					
Monaco					
Ocala Walnut					
Sabine Walnut					
Valley Forge Elm					
White Chocolate					
White Cypress					
Skye					

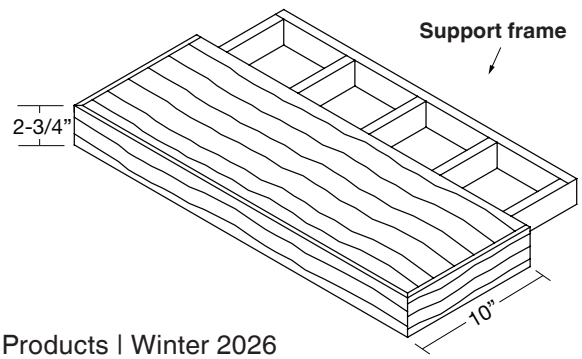

YouK Open Shelving Units

YouK Open Shelving Units are a functional way to add style to the interior décor of kitchens, bathrooms and other living areas throughout a home. The YouK Open Shelving Units have metal support ladders that must be mounted securely to the studs in the wall, and shelves must be secured to the metal support ladders. The result is a sturdy, attractive and fashionable shelf unit to display pictures, dishware and other interior design accents.

YouK Open Shelving Program

- 10 standard configurations as well as individual components and accessories are available.
- 6 metal support ladders are available in varying heights and depths.
- Metal support ladders with depth of 12-5/8” require the use of an adjustable height foot when mounting the metal ladder onto the floor. Adjustable height feet are included when ordering pre-configured units.
- If shelves are selected, they will be Slabs. Material options include solid wood, MDF and Alternative Materials.
    - Shelf depths are fixed at 6-5/8” or 11-5/16” depending on the depth of the metal support ladders selected.
    - The number of shelves is determined by the height of the metal support ladders selected.
    - The shelf thickness, specie, grade and length must be specified when ordering.
    - Shelf lengths over 36” will require an additional metal support ladder to prevent shelves from sagging.
    - Shelf thickness is 3/4” for Alternative Materials and 3/4" or 1” for solid wood and MDF.
    - When ordering solid wood or MDF shelving, shelf options include edge profiles and finishing options.
    - All solid wood and MDF shelves default to Machine Edge. Additional edge profile options are available.
    - A No Shelf Option is available.
- Once the metal support ladder is fully installed, each shelf must be secured to the metal support ladders using screws so the shelf cannot inadvertently slide off the metal support ladders. Pre-drilled holes are provided in the ladders to allow the shelves to be easily secured.

Metal Support Ladders

- Manufactured using jet black scratch-resistant powder-coated rails with welded frames to ensure smooth, strong connections. All metal support ladder frames are 1-1/4" deep by 5/8" wide.
- It is imperative that every metal support ladder be mounted to wall studs using two or more coarse thread screws at least 2-1/2" in length per metal support ladder. Pre-drilled holes are provided to allow the metal support ladders to be easily secured to the wall studs.
- Maximum load capacity for the shelves and metal support ladders is 10 lbs. per linear foot. While YouK Open Shelving Units are built from strong, sturdy materials, the load capacity of these units is dependent upon the quality of the installation screws and whether the metal support ladders are properly secured to the wall studs, and each shelf is properly secured to the metal support ladders. If each metal support ladder is not secured to a stud using two or more high quality installation screws per stud, and shelves are not properly secured to the metal support ladders, the YouK Open Shelving Unit may not support the desired weight. Conestoga will not be responsible for metal support ladder or shelf failure due to inadequate or improper installation techniques or materials.

Individual YouK Components and Accessories

- The YouK Open Shelving program allows customers to configure their own Open Shelving Unit by ordering individual metal ladder shelf supports, adjustable feet and Slab shelving. When configuring a custom YouK Open Shelving Unit, customers are responsible for ordering the correct number and sizes of metal ladder shelf supports, adjustable feet, corresponding Slab shelves and accessories. Please note that if ordering shelving longer than 36”, or the total weight of the items stored on individual shelves surpasses 10 lbs. per linear foot, additional support must be added to avoid shelf sag. Shelf supports can be in the form of additional metal ladders, or other type of support provided by the customer.

CSYOSU - YouK Open Shelving Unit Components and Accessories

Individual YouK Components and Accessories

The YouK Open Shelving program allows customers to configure their own Open Shelving Unit by ordering individual metal ladder shelf supports, adjustable feet, shelving and cabinetry. When configuring Open Shelving Units, customers must initiate the number and sizes of metal ladder shelf supports, adjustable feet, corresponding shelving, cabinets, support brackets and accessories.

Please note that if ordering shelving longer than 36", or the total weight of the items stored on the individual shelf surpasses 10 lbs. per linear foot, additional support must be added to avoid shelf sag. Shelf supports can be in the form of an additional metal ladder or other type of support provided by the customer. See following page for ordering templates.

- Shelf supports are fixed, no options.
- Drawings 1 and 2 measure 7-7/8" deep outside dimension and 6-5/8" deep inside dimension.
- Drawings 3 - 6 are 12-5/8" deep outside dimension and 11-3/8" deep inside dimension.
- Due to the material and assembly tolerances, rail spacing dimensions may vary +/- 1/16". This is considered acceptable for manufactured components.

Item #	Part Number	Description	Item #	Part Number	Description
#1	2105423A	YouK Ladder 26-3/8" x 7-7/8"	#7	2105413A	YouK Adjustable Foot 4" *
#2	2105424A	YouK Ladder 35-5/8" x 7-7/8"	#8	2105419A	YouK Outside Shelf *
#3	2105417A	YouK Ladder 21-5/8" x 12-5/8"	#9	2105420A	YouK Outside Hooks *
#4	2105418A	YouK Ladder 35-5/8" x 12-5/8"	#10	2105421A	YouK Outside Towel Rack *
#5	2105412A	YouK Ladder 59" x 12-5/8"	#11	2105415A	YouK Cabinet Bracket *
#6	2105411A	YouK Ladder 87" x 12-5/8"	#12	2105416A	YouK Cabinet Bracket Extension *

* Compatible with 12-5/8" depth ladders

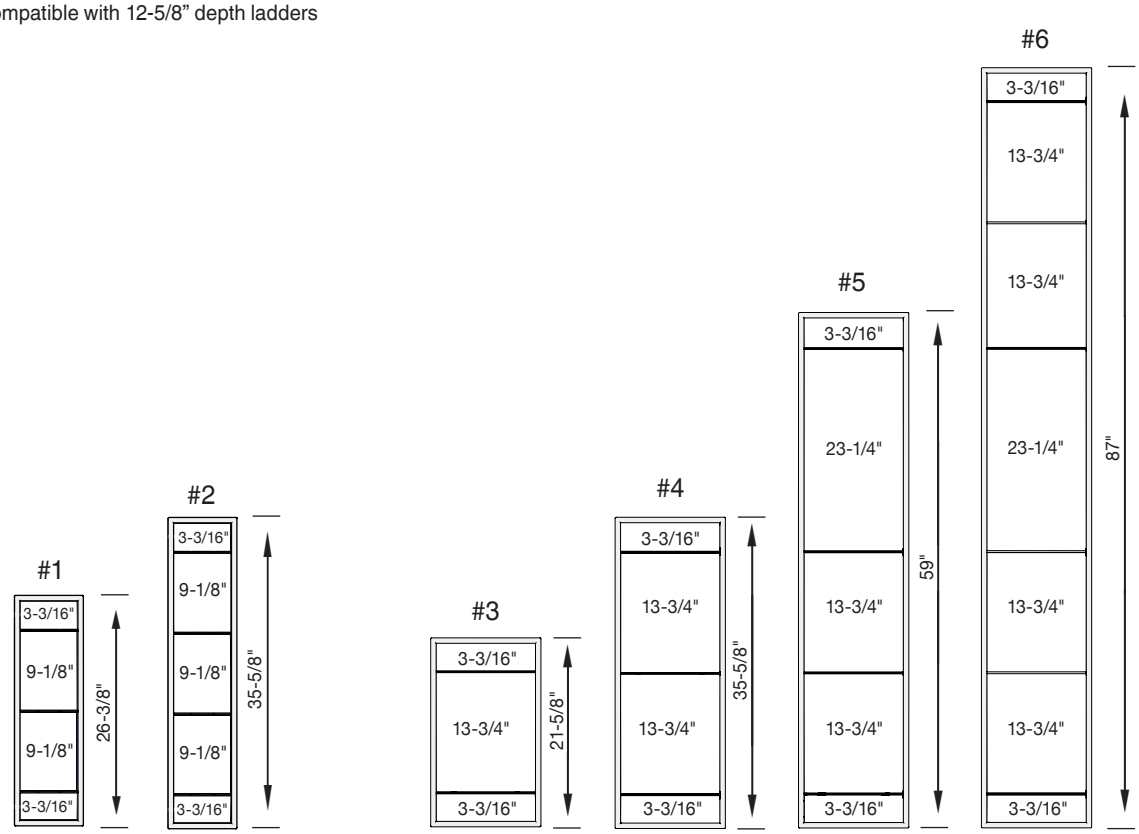

Please refer to pricing through Con-Nex, our online ordering program

CSYOSU - YouK Open Shelving Unit Components and Accessories (continued)

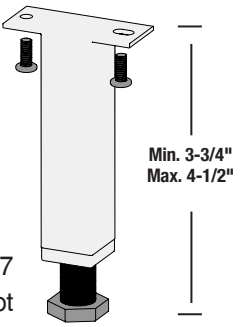

#7
Adjustable Foot

Note: Adjustable foot is only compatible with 12-5/8" depth metal support ladders.

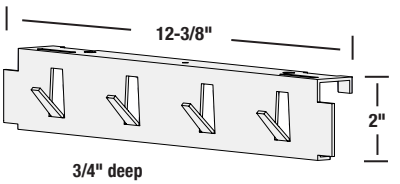

#9
Exterior Hook

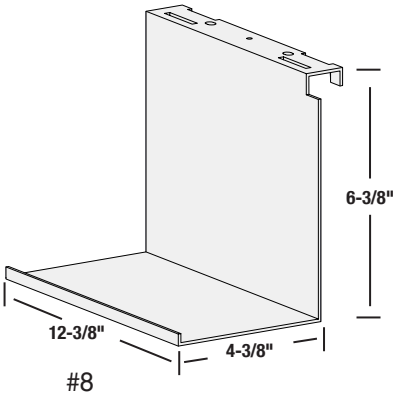

#8
Exterior Shelf

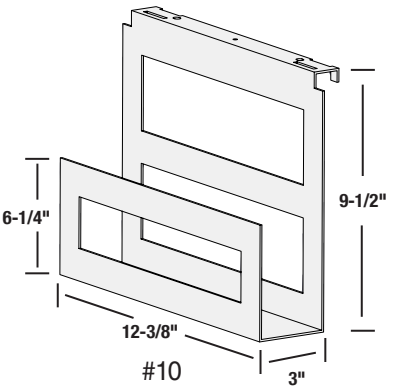

#10
Exterior Towel Rack

Ladders, Feet and Accessories	
Part Number	Quantity

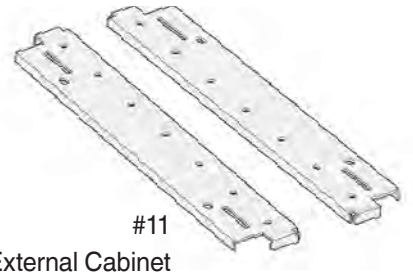

#11
External Cabinet Mounting Bracket

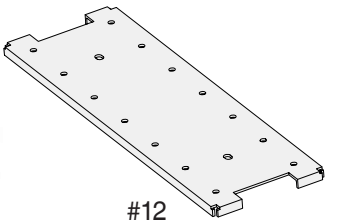

#12
Central Cabinet Bracket Extension

Slab Shelving								
Quantity	Length	Depth	Thickness	Specie	Grade	Edge Profile	Finish	Sheen

Please refer to pricing through Con-Nex, our online ordering program

YouK Cabinets

To incorporate cabinetry into your YouK system, start by selecting the necessary components; ladders, cabinets, and shelves to complete your custom layout. Begin by determining the overall width and height of your available wall space. The ladders serve as the structural framework and are available in various heights to support different configurations. Once your layout dimensions are established, choose from a range of cabinets, including wall cabinets, drawer units, open cubbies, and closed-door cabinets. YouK cabinetry is available with the same doors, drawer fronts, species, finishes, and Alternative Materials options offered in the Vesta RTA Cabinet program.

Each cabinet is designed to span two or more ladders, so it's important to ensure the cabinet dimensions align with your ladder spacing. After the cabinets are selected, shelves can be added in your choice of materials and finishes to create additional open storage or display space. Please note that if placing shelves in the same width span of your cabinetry, shelves must be 1.5" wider than cabinets. Each component, cabinets and shelves, requires specific mounting brackets based on type and placement. External mounting brackets must be used to support the outer sides of cabinets, while central brackets are needed where cabinets are adjacent to another cabinet or shelf. See page 11.15 for weight limitations.

YouK cabinets are built with screw and dowel construction, with dowels pre-inserted for ease of assembly. Functional hardware is bulk-packed, and all critical holes for glides, hinges, and alignment with metal ladders are pre-drilled to simplify installation. Cabinet tops are secured using self-tapping screws and extend an additional 7/8" to align with the cabinet fronts. For safety and stability, **ladders and cabinetry must be attached to the wall**. **NOTE:** hinges and glides automatically provided with cabinets.

CSYOUKW

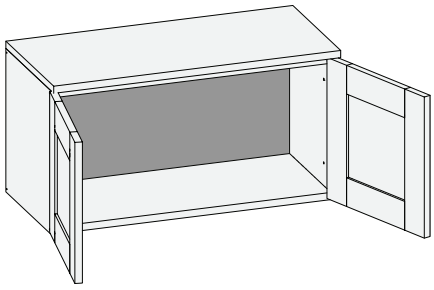

Custom Size Ranges
Single Door Width: 9" - 24"
Butt Door Width: 24" - 36"
Height: 6" - 72"
Depth: 13"

- Specify single or butt doors on custom size cabinets 24" wide.
- 6" - 18" high has no shelves.
- 18"- 24" high has one shelf.
- 24" - 36" high has two shelves.
- 36" - 48" high has three shelves.
- 48" - 60" high has four shelves.
- 60" - 72" high has five shelves.
- Recommended heights for the cabinet to align with the ladder rails: 13.875", 23.25", 27.75", 31.25", 41.625", 51", or 64.875".

CSYOUKW: 1 or 2 Door Cabinets - 13" Deep

Quantity	Width	Height	Design	Specie	Grade

Bead	Edge Profile	Raise	Finish	Sheen

Please refer to pricing through Con-Nex, our online ordering program

CSYOUK1D

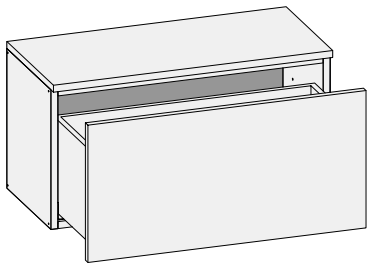

Custom Size Ranges
Width: 9" - 36"
Height: 6" - 24"
Depth: 13"

- When height changes, drawer box height changes proportionately.
- Recommended heights for the cabinet to align with the ladder rails: 13.875" or 23.25".

CSYOUK1D: 1 Drawer Cabinet -13" Deep

Quantity	Width	Height	Design	Specie	Grade

Bead	Edge Profile	Raise	Finish	Sheen

CSYOUK2D

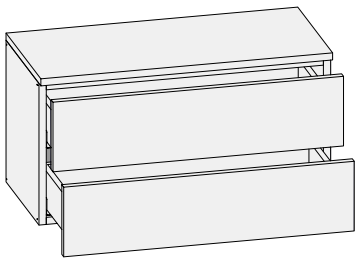

Custom Size Ranges
Width: 9" - 36"
Height: 12 - 24"
Depth: 13"

- When height changes, both drawers remain equal height.
- Recommended heights for the cabinet to align with the ladder rails: 13.875" or 23.25".

CSYOUK2D: 2 Drawer Cabinet -13" Deep

Quantity	Width	Height	Design	Specie	Grade

Bead	Edge Profile	Raise	Finish	Sheen

Please refer to pricing through Con-Nex, our online ordering program

CSYOSU - YouK Open Shelving Units

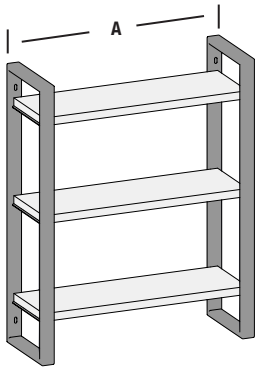

Height	Part Number
26-3/8"	CSYOSU0001
35-5/8"	CSYOSU0002

Part Number	
Shelf Length	
A	

- Shelf depth fixed at 6-5/8". Total unit depth is 7-7/8".
- Shelf specie, grade and length must be specified when ordering.
- Shelf lengths over 36" include an additional metal support ladder.
- A No Shelf Option is available.
- 26-3/8" high configuration has three shelves and two ladders (2105423A).
- 35-5/8" high configuration has four shelves and two ladders (2105424A).

Slab Shelving					
Specie/ Material	Grade	Thickness	Edge Profile	Finish/Color	Sheen

CSYOSU - YouK Open Shelving Units

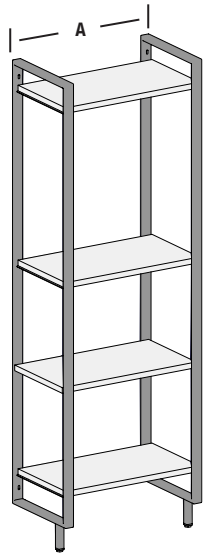

Height	Part Number
21-5/8"	CSYOSU0003
35-5/8"	CSYOSU0004
59"	CSYOSU0005
87"	CSYOSU0006

Part Number	
Shelf Length	
A	

- Shelf depth fixed at 11-5/16". Total unit depth is 12-5/8".
- Shelf specie, grade and length must be specified when ordering.
- Shelf lengths over 36" include an additional metal support ladder.
- A No Shelf Option is available.
- Provided adjustable foot must be used per metal upright if mounting the metal support ladder onto the floor.
- 21-5/8" high configuration has two shelves and two ladders (2105417A).
- 35-5/8" high configuration has three shelves and contains two ladders (2105418A).
- 59" high configuration has four shelves and two ladders (2105412A).
- 87" high configuration has six shelves and two ladders (2105411A).

Slab Shelving					
Specie/ Material	Grade	Thickness	Edge Profile	Finish/Color	Sheen

Please refer to pricing through Con-Nex, our online ordering program

CSYOSU - YouK Open Shelving Units

Height	Part Number
87"	CSYOSU0007

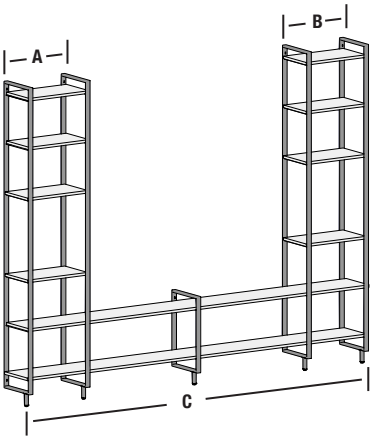

Part Number	
Shelf Length	
A	
B	
C	

- Shelf depth fixed at 11-5/16". Total unit depth is 12-5/8".
- Middle opening is always the difference of provided dimensions (C - (A+B)).
- Shelf specie, grade and length must be specified when ordering.
- Shelf lengths over 36" include an additional metal support ladder.
- A No Shelf Option is available.
- Provided adjustable foot must be used per metal ladder if mounting the metal support ladder onto the floor.
- 87" high configuration has ten shelves, four 87" ladders (2105411A) and one 21-5/8" ladder (2105417A).

Slab Shelving					
Specie/ Material	Grade	Thickness	Edge Profile	Finish/Color	Sheen

CSYOSU - YouK Open Shelving Units

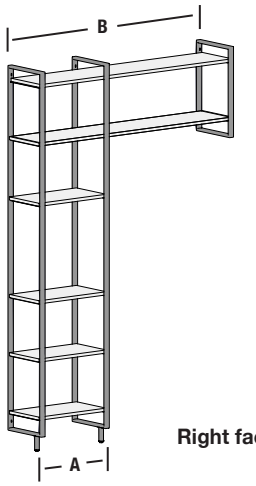

Right facing shown

Height	Part Number
87"	CSYOSU0008

Part Number	
Shelf Length	
A	
B	

- Shelf depth fixed at 11-5/16". Total unit depth is 12-5/8".
- Opening is always the difference of provided dimensions (B - A).
- Shelf specie, grade and length must be specified when ordering.
- Shelf lengths over 36" include an additional metal support ladder.
- A No Shelf Option is available.
- Provided adjustable foot must be used per metal ladder if mounting the metal support ladder onto the floor.
- 87" high configuration has six shelves, two 87" ladders (2105411A) and one 21-5/8" ladder (2105417A).

Slab Shelving					
Specie/ Material	Grade	Thickness	Edge Profile	Finish/Color	Sheen

Please refer to pricing through Con-Nex, our online ordering program

CSYOSU - YouK Open Shelving Units

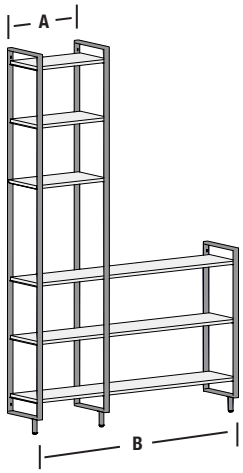

Right facing shown

Height	Part Number
87"	CSYOSU0009

Part Number	
Shelf Length	
A	
B	

- Shelf depth fixed at 11-5/16". Total unit depth is 12-5/8".
- Opening width is always the difference of provided dimensions (B - A).
- Shelf specie, grade and length must be specified when ordering.
- Shelf lengths over 36" include an additional metal support ladder.
- A No Shelf Option is available.
- Provided adjustable foot must be used per metal ladder if mounting the metal support ladder onto the floor.
- 87" high configuration has six shelves, two 87" ladders (2105411A) and one 35-5/8" ladder (2105418A).

Slab Shelving					
Specie/ Material	Grade	Thickness	Edge Profile	Finish/Color	Sheen

CSYOSU - YouK Open Shelving Units

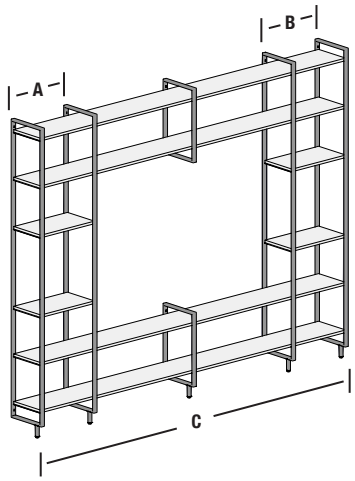

Height	Part Number
87"	CSYOSU0010

Part Number	
Shelf Length	
A	
B	
C	

- Shelf depth fixed at 11-5/16". Total unit depth is 12-5/8".
- Middle opening width is always the difference of provided dimensions (C - (A + B)).
- Shelf specie, grade and length must be specified when ordering.
- Shelf lengths over 36" include an additional metal support ladder.
- A No Shelf Option is available.
- Provided adjustable foot must be used per metal ladder if mounting the metal support ladder onto the floor.
- 87" high configuration has eight shelves, four 87" ladders (2105411A) and two 21-5/8" ladders (2105417A).

Slab Shelving					
Specie/ Material	Grade	Thickness	Edge Profile	Finish/Color	Sheen

Please refer to pricing through Con-Nex, our online ordering program

Stemware Holders

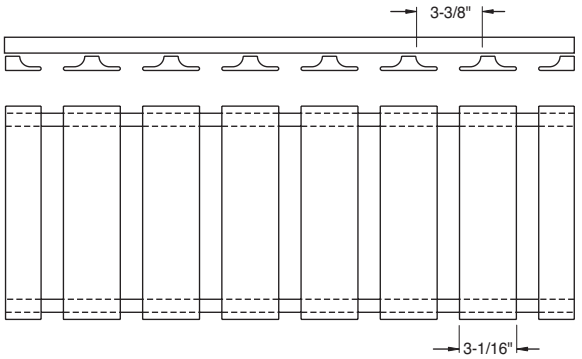

- Stemware holders are available in Cherry and Hard Maple.
- 30" (7 slots) or 36" (8 slots) lengths.
- Spacing between slats:
  30" stemware holder – 1-1/8".
  36" stemware holder – 1-3/8".
- Depth 11-1/4".
- Thickness 1-1/2".
- Accommodates most stemware styles.
- Available unfinished or finished. See the Finishing Program Section for pricing.

Custom Cutting Boards

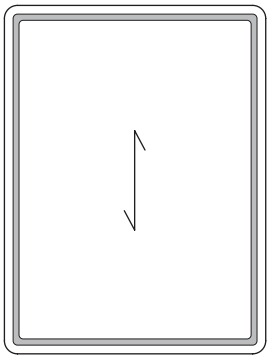

1-Piece Slab design

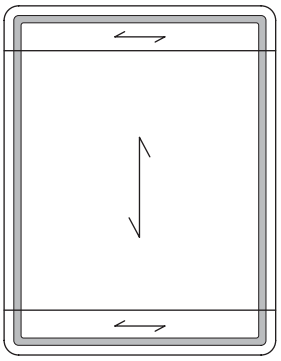

3-Piece Slab design

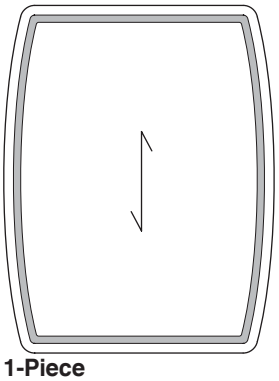

1-Piece Barreldesign

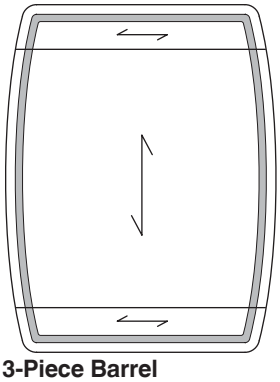

3-Piece Barrel design

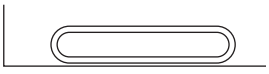

Hand Pull - 1/4" deep, 3-1/2" long, 1/2" wide

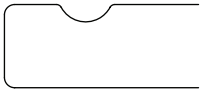

Drip Groove - 5/32" deep

- Cutting boards are available in all published species except Rustic Knotty.
- All cutting boards utilize Category B Material Charge.
- Cutting boards available in 3/4" and 1" thickness.
- Minimum size for all styles is 10" x 10", maximum size is 18" x 22".
- All designs include 3/4" radius corners and 3/32" radius edges.
- 3-Piece designs are made using 2-5/16" wide rails on face (horizontal grain) with pinless construction.
- All cutting boards have a routed drip groove into the face of the board to collect liquids.
- No oils or finishing treatments will be applied by Conestoga.
- Care instructions for wood cutting boards:
  - Treat wood with butcher block oil or mineral oil only.
  - To clean, wipe with a mixture of warm water and a mild dish detergent. Never submerge cutting boards in water or place in dishwasher.
- Hand pull option on back of cutting board is available: per pull.
- Due to repetitive exposure to liquids, cutting boards will not be warranted against bowing, warping, splitting or twisting.

Please refer to pricing through Con-Nex, our online ordering program

Front Frame Specifications

- Double dowel construction on standard width framing.
- Material will be Standard grade unless otherwise noted. Premium grade available, upcharges apply.
- Standard framing width is 1-1/2"; additional widths available, upcharges apply.
- 3/4" framing thickness standard; 1" thick material is available, upcharges apply.
- Minimum framing width 3/4"; 15/16" for front frames with an edge profile.
- Material surfaced on four sides.
- Assembled frames sanded on front only with 220 grit sandpaper.
- Maximum front frame sizes are 120" in one direction and 48" in the other direction. For example, a front frame can be ordered 48" x 120" or 120" x 48" but not 120" x 120".
- Framing 2-3/8" to 4" may have one glue joint. Framing wider than 4-1/16" may have two glue joints.
- Minimum glue-in trimmable insert width is 1/2"; maximum glue-in trimmable insert width is 3".

Front Frame Tolerances

- A tolerance of +/- 1/32" is considered acceptable on front frame exterior and interior opening dimensions.
- A tolerance of +/- 1/16" out of square is considered acceptable on all front frames.
- 1/32" offset on frame back at any joint is considered acceptable.
- 1/64" offset at any exterior joint on the outside perimeter is considered acceptable.

Front Frame Ordering Information

- Conestoga's custom front frames can be ordered as beaded, non-beaded or profiled. To specify, check the appropriate box in the beaded area of the order form.

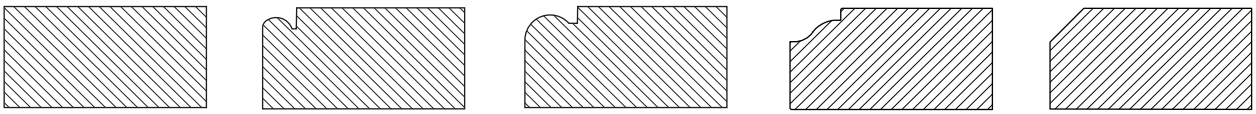

Non-beaded **1/4" Bead** **3/8" Bead** **3/8" Ogee** **1/4" V-Bead**

- Front frame exterior dimensions, interior opening dimensions and framing widths can be ordered to the nearest 1/16".
- On beaded orders, customers may select specific openings to be "non-beaded" by specifying the opening letter designation. Example: "Do not bead opening S."
- When ordering custom front frames for Conestoga Cabinet Systems, all framing and opening sizes must be specified by the customer. Only standard groove locations available.
- Front Frame Configuration Template Packet can be found on the Customer Business Portal. Contact Customer Service for sign on information or, request the Front Frame Configuration Template Packet.

Front Frame Pricing

Pricing Instructions

- Front frame pricing is based on the number of openings and the external frame perimeter.
- Use frame perimeter (linear inches) x specie price per linear inch. Use the appropriate column to determine the material price based on specie and the number of openings.
- Add the appropriate cost per opening charges from the chart below.

Cost per Opening	
First opening	
Additional openings, each	

Material Charge per Opening				
Specie	1 or 2	3 or 4	5 or 6	7 or 8
Alder				
Bamboo				
Birch, Red				
Birch, White*				
Cherry*				
Hickory*				
Maple, Hard*				
Maple, Soft				
Oak, Red*				
Oak, Red, Rift Cut				
Oak, White*				
Oak, White, Rift Cut				
Paint Grade Hard Maple				
Pine, Knotty				
Walnut*				

*Indicates premium specie availability – upcharges apply.

Options Pricing	
Option	Additional Cost
Premium grade material (subject to availability)	35% of material price
1" thick framing (Bamboo not available)	30% of material price
Face and back sand	
Beaded inset framing (1/4" or 3/8" bead)	
Ogee or V-Bead framing	
Pre-fit inset door or drawer front	
Groove to fit Conestoga Cabinet Systems	
Edge profile around outside perimeter	
Glue-in trimmable inserts	
Cut Backs	
Roman shaped rails - non-beaded	
Beaded shaped rails available through Special Designs	
Oversize front frame assembly Tier 1: 58" to 99-15/16" in width and height	
Oversize front frame assembly Tier 2: 100"+ in width or height	
Oversize front frame sanding (frames exceeding 48" in width or height)	
Unassembled front frames	

Pricing Methodology for Finishing Custom Front Frames

Front frame Material Charges are calculated using the perimeter of the front frame multiplied by 4, and then divide the result by 144. Multiply the result by the applicable Material Charge. Add the appropriate number of Design Charges based on the number of front frame openings.

Example: 2 opening front frame 30" x 36" in Harvest Gold

Pricing for all parts will be based on design + material methodology using material charges from Conestoga's finishing program (see Finishing Program Section for Material and Design Charges).

Custom Front Frame Finishing	
Number of openings	Design Charge Multiplier
1	1
2 to 3	1.5
4 to 5	2
6 to 7	2.5
8+	3

Front Frame Pricing (continued)

Non-Standard Framing Widths	
Material Width	**Upcharge per stile or rail**
3/4" to 1-7/16"	
1-1/2"	
1-9/16" to 5-15/16"	
6" to 7-7/16"	
7-1/2" and wider	

Non-standard frame configurations will be processed through Special Designs.

Front Frames Lead-Times			
Product	**Standard Lead-Time**	**Expedite max. 6 frames**	
		Code Red	**Code Blue**
Custom front frames	10	4	5
Options - additional working days			
Shaped rail	3	3	3
Pre-fit inset doors	2	2	2

Orders containing products with different lead-times are given the longest lead-time date.

Inset Door and Drawer Front Information

- The following edge profile options are recommended for use with inset doors and drawer fronts.
- These edges have a 5 degree back bevel edge to ensure sufficient door clearance. Machine Edge and L-149 are available upon request at no additional upcharge.
- Front frames ordered with inset doors and drawer fronts will be pre-fit to the opening size. A 3/32" margin will be used on all sides for single doors and drawer fronts and between butt door pairs.

Standard Edge Profile Options

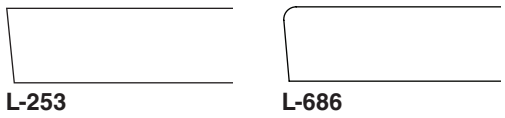

L-253

L-686

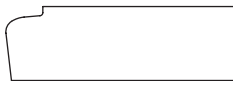

L-947

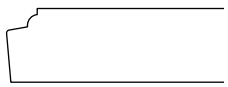

L-967



L-1117



L-1120

Premium Prefit/Inset Edge Profiles

additional charge per door or drawer front.
(These 2 profiles require 2 additional working days.)



L-304



L-996

Design Exceptions

- The following door and drawer front styles are not available for inset applications due to their unique design characteristics: 1-1/8" Sandwich Drawer Front, #10 Drawer Front, 10141 Drawer Front, Aspen, AspenPP, Astoria, Aurora, Boulder, BoulderPP, CRP-1420, CRP-10191, CRP-10318, CRP-10334, CRP-10827, CRP-10875, CRP-10946, Fairhaven, Fargo, FargoPP, Hastings, Keystone Drawer Front, LaSalle, Marcel Drawer Front, Omaha, OmahaPP, Prestige, Rothbury, Rothsford, Savoy, Topeka, TopekaPP, TW-10827 and Woodhull.
- Alexandreia, Juno, Venus, Venus78 and Vulcan door and drawer front designs are available for inset applications only when ordered with Machine Edge or L-253 edge profiles.
- Alternative Material doors and drawer fronts are not available for inset applications, including Allure DLV, Intrigue TTS, Strata TTS, Vogue TTS, Synchronicity High Gloss and Super Matte products.
- Openings with trimmable inserts are not available beaded.
- L-253 and L-686 – only edge profiles available in MDF pre-fit products.
- Finished front frames are not available with antiquing or wear sanding.
- Distressed front frames will receive a modified distressing package.

Inset Door and Drawer Front Information (continued)

- Custom front frames that are ordered with Colourtones and glazes will receive the same hand glazed finishes as doors. Cabinet Systems parts that are ordered with Colourtones and glazes will be finished with the special Colourtones that have been tinted to match the Colourtones and glaze combination. They will not receive a hand rubbed glaze.

Inset Option with Miter Designs Not Recommended

Only miter door designs with edge profile options are available with the inset option; however, miter designs are not recommended with the inset option. The following issues are associated with inset miter designs, and will not be considered defective:

- **Miter joint lines may not intersect door corner after pre-fit sanding.** This is not considered a defect as it is a necessary part of the pre-fit process to ensure the proper fit within the frame openings. This condition may not be pleasing to some customers.
- **Panel expansion caused by high humidity may cause miter doors to bind inside frame openings.** Although Conestoga's miter door joint construction is one of the most durable in the industry, high humidity will cause solid wood center panels to expand in width. This pressure can result in framing pushing outward and creating a "barrel" effect where the framing rubs against the front frame.
- If a miter design is selected, it is highly recommended that doors and drawer fronts be manufactured as 5-piece MDF, Hybrid products with MDF center panels or with plywood center panels. These materials will reduce the likelihood of product expansion and binding of inset doors within the front frame. While reducing the possibility of binding, expansion of solid wood framing can still occur and will not be considered defective.

1/8", 1/4" and 3/4" Plywood Program

- 1/8" thick sheet stock with Grade A face veneer applied over veneer core with sound back.
- 1/4" thick sheet stock with Grade A face and #1 back veneers applied over MDF core.
- 3/4" thick sheet stock with Grade A face veneer applied over veneer core with prefinished Natural Birch back, except where otherwise noted.
- 3/4" thick full sheets or cut-to-size panels over 96-1/16" up to 120" in length of Hard Maple/Hard Maple will have an MDF core.
- All 1/8", 1/4" and 3/4" sheet stock is available in full 4' x 8' sheets, with the exception of Hard Maple/Hard Maple which is also available in 4' x 10' sheets. All sheet stock including 4' x 10' material is also available as cut-to-size panels.
- Plywood finished in Colourtones may have pin marks and small scratches from drying racks, veneer checks, seam separation, glaze smudges, fingerprints, overspray and some dirt in topcoat. Such defects will be kept to a minimum, but are unavoidable when finishing large parts and will not be considered defective. 3/4" thick edges will not be finished unless edgeband has been applied.
- Lead-time 5 days cut-to-size, unfinished; 3 days for full sheets. Add 5-6 days for finishing.
- Additional sheet stock is available through Special Designs in common species, grades and thickness in single sheet minimums. Specify thickness, core type, specie (face and back), veneer grade (face and back) and veneer cut (face and back). Lead-times and pricing are subject to availability.
- Oversized packaging charge of net per item applies for large cut-to-size pieces or full 4' x 8' sheets of 1/8", 1/4" or 3/4" material. Oversize packaging parameters and conditions apply when the size exceeds 36" wide and 36" long, if any dimension exceeds 84", or when a customer requests oversize packaging.

1/8", 1/4" and 3/4" Plywood Program (continued)

Pricing Instructions

- Multiply actual square footage of panel by the appropriate specie Material Charge.
- Add the Design Charge per panel and applicable options.

Options

- When ordering cut-to-size plywood, specify width, height and grain direction.
- Edgeband charges (3/4" plywood only):
  - .5mm edgeband 1 to 4 edges:
  - 2mm edgeband 1 to 4 edges: 2mm edgeband has a 2mm radius on the outside edges, similar to edge profile L-034.
  - For edgeband on specific edges of cut-to-size plywood, specify edges as follows: top, bottom, left, right or all edges.
- Grooving available (1/4" material only):
  - G-012, G-015 or G-056 groove profiles.
  - Spacing available in increments starting at 1/2" up to 4".
- When ordering primed or painted 3/4" cut-to-size MDF panels, exterior edges will not be profiled, sanded or prepped for finishing and panel edges will appear somewhat porous. To recieve edges that are profiled and sanded prior to finishing, order as a Slab door design with the Machine Edge profile.
- Panel Grooving charges (per panel):
  - Up to 24" wide and 48" or under in length:
  - Up to 24" wide and over 48" in length:
  - Over 24" wide and 48" or under in length:
  - Over 24" wide and over 48" in length:
- Cut-to-size or full sheets of plywood also available finished; see Finishing Program Section for finish options and pricing.
- Colourtone finishes are available on Cherry, Hard Maple and Red Oak plywood only.

1/8" Plywood Panel Program

Specie	Material Charge	Design Charge
Cherry		
Maple, Hard		

1/4" Plywood Panel Program

Specie	Material Charge	Design Charge
Alder		
Bamboo, Caramelized		
Birch, Red		
Birch, White		
Cherry		
Hickory		
Maple, Hard		
MDF (Raw)		
Oak, Red		
Oak, Red, Rift Cut		
Oak, White		
Oak, White, Quarter Sawn		
Oak, White, Rift Cut		
Walnut		

3/4" Plywood Panel Program

Specie (Exterior/Interior)	Material Charge	Design Charge
Alder/Natural Birch (UV Finish, Veneer Core)		
Bamboo, Caramelized/Bamboo (Composite Core)		
Cherry/Cherry (Veneer Core)		
Cherry/White Birch (UV Finish, Veneer Core)		
Hard Maple/Hard Maple (Veneer Core)		
Hard Maple/White Birch (UV Finish, Veneer Core)		
MDF (Raw)		
Red Oak/Red Oak* (Veneer Core)		
Red Oak/White Birch* (UV Finish, Veneer Core)		
Rift Cut Red Oak/Rift Cut Red Oak (Composite Core)		
Rift Cut White Oak/Rift Cut White Oak (Composite Core)		
Walnut/Walnut (Composite Core)		

*Available with .5mm edgebanding only.

1/4" Short Grain Plywood Program

- 96" x 48" panel for island back or wall panel applications.
- Grain runs vertically in the 48" direction.
- 1/4" thick material with Grade A face veneers applied over MDF core with sound back.
- Available unfinished or finished; see Finishing Program Section for finish options and pricing.
- Lead-time 3 days unfinished, add 5-6 days for finishing.
- Oversize packaging fee of net applies.

1/4" x 96" x 48" Plywood Short Grain Panel			
Part #	**Specie**	**Material Charge**	**Design Charge**
1600121A	Cherry		
1600122A	Maple, Hard		

Veneers

- All veneers are approximately 1/32" thick and have real wood veneer faces.
- One end and one side of any veneer sheet is guaranteed to be free from physical damage.
- Wood back veneers have a cross grain wood backer which allows trim edges to be finished to reduce “black line” effect.
- Poly back veneers are applied to a polymer resin impregnated membrane. They contain no added urea formaldehyde (NAUF), are rigid yet pliable and provide excellent moisture resistance.
- Wood back and Poly back veneers are available with their applicable backer with an optional pressure sensitive adhesive (PSA) backer. PSA backed veneers have a pre-glued adhesive layer protected by a peel coat covering that must be removed prior to application.
- Phenolic Back veneers will be used in place of Hard Maple 48-1/4" x 96-1/2" Wood back or Poly back when ordered with Colortones, Prism Prints or primers. Upcharge applies.
- Veneers are not guaranteed to perfectly match solid wood doors. Veneer is sliced from premium material; color and grain match will be more uniform than solid wood doors. Hickory veneers may contain mineral streaks and peck marks.
- Proper surface conditions and preparation is essential to successful application and performance of veneered surfaces.
- Per manufacturer’s recommendations, veneers of all backer types should be placed flat and allowed to acclimate 48 hours before installation.
- Pressure sensitive veneers should not be applied to bare wood or surfaces covered with sanding sealers, high pressure laminates, melamine or other plastic materials.
- Wood back and Poly back veneers are best applied with roller grade adhesives. Sufficient adhesive coverage on both the veneer and substrate surface will ensure proper adhesion and performance.
- Conestoga is not liable for product failure due to improper surface preparation, adhesive selection or installation technique.
- Finishing Option available. Stained veneers may vary slightly in color from solid wood products of the same specie. Finishing adds 5-6 days to standard lead-time.
- Conestoga does not accept returns of veneers.

PSA Wood Back

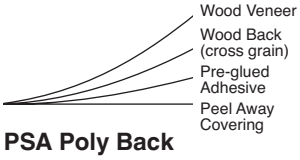

PSA Poly Back

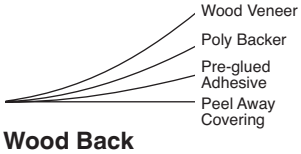

Wood Back



Poly Back

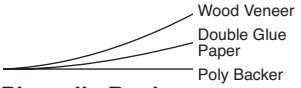

Phenolic Back



Specie	24" x 96" PSA Veneers		48-1/4" x 96-1/2" Veneers		
	Wood Back	Poly Back	Wood Back	Poly Back	Phenolic Back***
Alder	Yes *	Yes**	Yes*	Yes**	NA
Bamboo	Yes**	Yes**	Yes**	Yes**	NA
Birch, White	Yes**	Yes**	Yes**	Yes**	NA
Cherry	Yes*	Yes*	Yes*	Yes*	NA
Hickory	Yes**	Yes**	Yes**	Yes**	NA
Maple, Hard	Yes*	Yes*	Yes*	Yes*	Yes*
Oak, Red	Yes**	Yes**	Yes**	Yes**	NA
Oak, Red, Rift Cut	Yes*	No	Yes*	No	NA
Oak, White	Yes**	Yes**	Yes**	Yes**	NA
Oak, White, Quarter Sawn	Yes**	Yes**	Yes**	Yes**	NA
Oak, White, Rift Cut	Yes*	No	Yes*	No	NA
Pine, Knotty	Yes**	Yes**	Yes**	Yes**	NA
Walnut	Yes**	Yes**	Yes**	Yes**	NA

* Stock item, 3 to 4 day lead-time. ** Non-Stock item, 12 to 16 day lead-time.

*** Available with primers, Colourtone and Prism Paint finishes only.

Please refer to pricing through Con-Nex, our online ordering program

Wood Edgeband Program

Conestoga offers 7/8" wide x 500' rolls of .5mm wood edgeband to complete your panel processing requirements. Select species are also offered in 250' rolls. See charts below for specie availability.

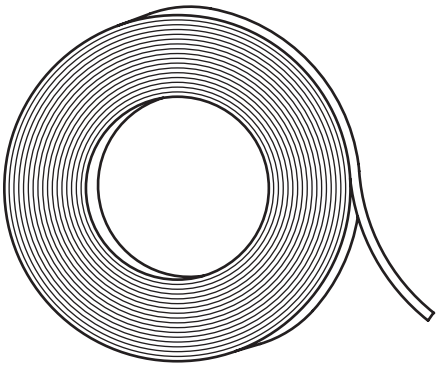

- Real wood veneer applied to an unglued fleece backer.
- Edgeband is not guaranteed to perfectly match solid wood doors or sheet stock. Veneer edgeband is sliced from premium material; color and grain match will be more uniform than solid wood doors.
- Edgeband will contain multiple splice joints which will not be considered a defect.
- Conestoga is not liable for product failure due to improper surface preparation, adhesive selection or installation technique.
- All Conestoga finishing options are available as outlined in the Finishing Program Section of this manual.
- Lead-time 5 days unfinished for stock species, add 5-6 days for finishing. Expedite lead-times not available.
- Conestoga does not accept returns of finished edgeband.
- See the Finishing Program Section for finish pricing.

500' Wood Edgeband	
Specie	**Specie**
Alder*	Maple, Hard*
Bamboo*	Oak, Red*
Birch, White**	Oak, White*
Cherry*	Walnut*
Hickory**	

250' Wood Edgeband
Specie
Cherry*
Maple, Hard*

* Stock item 5 day lead-time.
** Non-stock item 15 day lead-time.

Please refer to pricing through Con-Nex, our online ordering program

PVC Edgeband Program

Thermoplastic PVC Edgeband

- PVC edgeband rolls are 15/16" wide, 600' in length and .018" (.5mm) thick.
- Rolls of PVC edgeband are available in over 120 colors and grain patterns to match popular Conestoga finishes.
- The back side of the edgeband is coated with a bonding agent for superior adhesion when used with hot melt glues or solvent-based adhesives.
- PVC edgebands are impact resistant and perform well with cutting tools.
- The PVC edgebands listed provide a close match in appearance to the specie and finish referenced, however, due to color variations in wood substrates we cannot guarantee a perfect match. Some edgebands contain a slight texture and are identified with an asterisk in the chart. Edgeband finishes with two asteriks are 1mm thick and have a slight texture.
- Conestoga is not liable for product delamination or adhesion failure due to improper surface preparation, adhesive selection or installation technique.
- Full rolls only, partial rolls are not available through this program.
- Lead-time is 4 days, expedites not available.

Since Conestoga offers thousands of specie, finish and glaze combinations, customers may have a need for an edgeband not listed in our standard offering. In this case, Conestoga will attempt to work with our suppliers to see if an existing match can be identified. Since a sample chip of the specie/finish must be produced and shipped to the supplier, there will be a fixed charge of net for this exercise, regardless if a match is found or not.

For a complete list of our current PVC Edgeband offering, please refer to the PVC Edgeband guide on the Customer Business Portal or Con-Nex, our online ordering program.

Please refer to pricing through Con-Nex, our online ordering program

3D Panels

3D Panels are a functional way to create built-in appearances, commonly used as refrigerator end panels, at the end of cabinet runs, a bridge above or beneath wall cabinets, and as island ends. All three panel models include inner supports to prevent panels bowing or cupping. 3D Panels up to 96" are made from 3/4" thick composite core plywood. Panels above 96" will be either composite core plywood or veneer core plywood. Species available are Cherry, Hard Maple, MDF, Rift Cut Red Oak, Rift Cut White Oak and Walnut. Rift Cut Red Oak is available up to 96" only.

Sizing

- Custom sizing is available to the nearest 1/16" in width, depth and height within program parameters.
- Minimum height for all models is 24", maximum standard height is 96" with vertical grain, maximum height for MDF is 96". Taller MDF heights available, but must be quoted through Special Designs. Additional lead-time required.

Pricing

- Calculate the actual square footage of the exposed/exterior side. Multiply the panel square footage by the appropriate specie list price. A 3 square foot minimum applies, regardless of actual size.
  - Cherry & Hard Maple
  - MDF
  - Rift Cut Red Oak
  - Rift Cut White Oak
  - Walnut
- Multiply the total material cost established in the prior step by the model multiplier: Box Panel – 2.2, J-Panel - 1.75, U-Panel - 2.0.

Order Placement

- When placing order for any of the 3D Panel models, include the following dimensions:
  - Width of front panel (B side and/or D side).
  - Depth of exterior/exposed side panel (A side and/or C side).
  - Height of exterior/exposed side panel (A side and/or C side).
  - Vertical or horizontal grain direction.

Program Features

- Specify vertical or horizontal grain. (maximum size perimeters vary by grain direction).
- Finish options – available unfinished or finished in all published specie/finish selections except Distressing.
  - Finishing charges follow Conestoga's design plus material pricing method.
    - A minimum of 3 square feet will be applied, regardless of actual size.
    - 3.00 to 6.00 square feet – 2x Design Charge plus actual square footage charge of the exterior panel.
    - 6.01 square feet to 10.00 square feet – 3x Design Charge plus the actual square footage charge of the exterior panel.
    - 10.01 square feet and greater – 4x Design Charge plus the actual square footage charge of the exterior panel.
- Internal supports in 3-D Panel ends and backs are positioned 1" in from edges to fit over cleats mounted to the floor, wall and/or ceiling.
- Lead-time is 10 business days unfinished. Add 5 to 6 days for finishing.
- Expedites are not available.

3D Panels (continued)

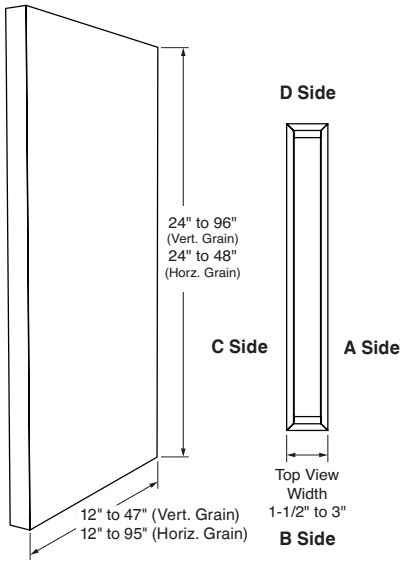

Box Panel

- Primarily used as island ends when both the front and back edges are exposed.
- Both ends of the Box Panel will be equal in width and height (B and D sides).
- Both side panels of the Box Panel will be equal in depth and height (A and C sides).
- Width range of front and back panels: 1-1/2" to 3" (B and D sides). 1-1/2" width is sandwiched and edgebanded except MDF which is not edgebanded.
- Depth range of side panels: 12" to 47" (vertical grain). Horizontal grain depth range is 12" to 95" (A and C sides).
- Height range of side panels: 24" to 96" (vertical grain). Cherry, Hard Maple, Rift Cut White Oak and Walnut also available 96-1/16" to 120" – additional lead-time required. Horizontal grain height range 24" to 48".

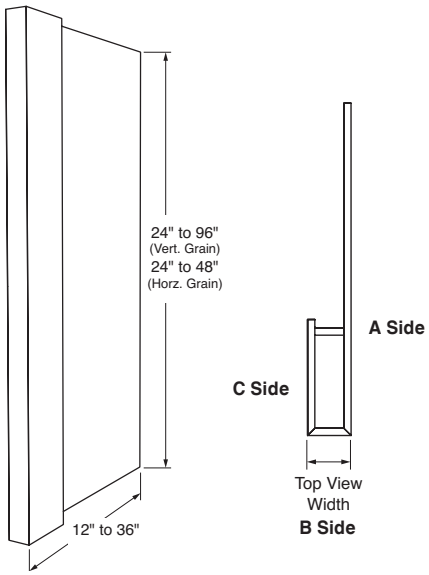

J-Panel

- Typically mounted against wall as base and refrigerator cabinet ends. Unfinished back edge must butt against a wall.
- The interior leg of the J-Panel depth range is 4" to 8" (C side).
- Width range of front panels 1-1/2" to 3" (B side). 1-1/2" width is sandwiched and edgebanded except MDF which is not edgebanded.
- Depth range of side panel: 12" to 36" (A side).
- Height range of side panel: 24" to 96" (vertical grain). Cherry, Hard Maple, Rift Cut White Oak and Walnut also available 96-1/16" to 120" – additional lead-time required. Horizontal grain height range 24" to 48".

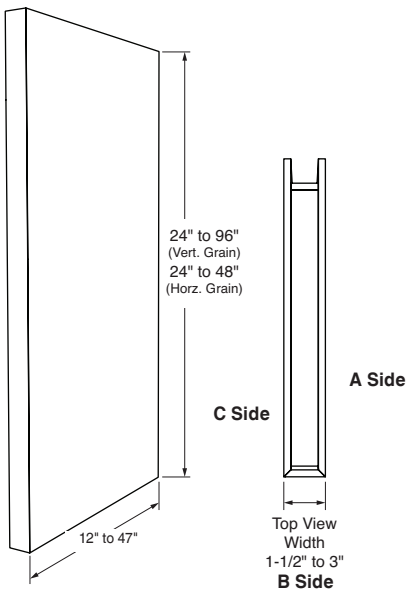

U-Panel

- Primarily used against wall, base and refrigerator ends as well as a bridge above or beneath wall cabinets to create a built in appearance. Unfinished back edges must butt against a wall.
- Both side panels of the U-Panel will be equal in depth and height (A and C sides).
- Width range of front panels 1-1/2" to 3" (B side). 1-1/2" width is sandwiched and edgebanded except MDF which is not edgebanded.
- Depth range of side panel: 12" to 47" (A and C sides).
- Height range of side panels: 24" to 96" (vertical grain). Cherry, Hard Maple, Rift Cut White Oak and Walnut also available 96-1/16" to 120" – additional lead-time required. Horizontal grain height range 24" to 48".

Blum COMPACT BLUMOTION Hinge Program

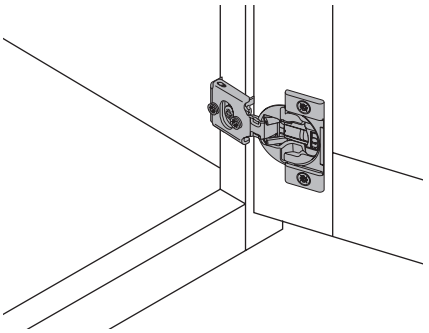

1/2" Overlay Hinge
COMPACT BLUMOTION 38N
105˚ opening angle

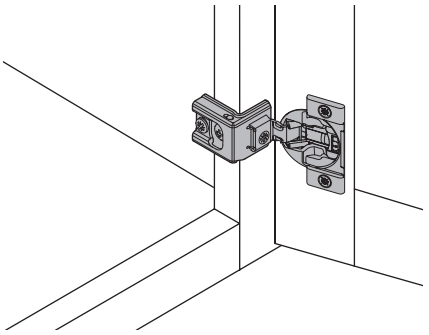

1-1/4" and 1-3/8" Overlay Hinge
COMPACT BLUMOTION 39C
110˚ opening angle

Blum Hinges with Integrated Soft Close

- One-piece steel, concealed, self closing hinges designed for use with 3/4" thick front frames.
- Available for 1/2", 1-1/4" and 1-3/8" overlays.
- Soft close feature is integrated in the hinge cup itself.
- Soft close function can be easily deactivated with a switch on individual hinges as needed based on the door size and weight.
- Hinges packed in pairs with mounting screws.
- All hinges feature side, height, and depth adjustment for fine tuning door spacing with wraparound face frame mounting for ease of installation.
- All hinges require Pattern A – Cup Only concealed hinge boring.
- COMPACT BLUMOTION hinges carry a limited lifetime warranty.
- Lead-time is 5 days.

COMPACT w/Integrated BLUMOTION	
Part No.	**Overlay**
2100150A	1/2"
2100151A	1-1/4"
2100152A	1-3/8"

Integrated BLUMOTION Bulk Pack (50 hinges)	
Part No.	**Overlay**
2100153A	1/2"
2100154A	1-1/4"
2100155A	1-3/8"

Please refer to pricing through Con-Nex, our online ordering program

Blum Frameless Cabinetry Hinge Program

- Hinge and in-line mounting plate systems for standard, specialty and angled frameless cabinets.
- Soft close feature is integrated in the hinge cup itself unless otherwise noted.
- Soft close function can be easily deactivated with a switch on individual hinges as needed based on the door size and weight.
- Hinges packed in pairs with mounting plates and instructions.
- No screws required for hinge or mounting plate installation unless otherwise noted. Most hinges use cam style insert plugs.
- In-line mounting plates utilize 32mm system holes and are concealed behind the hinge arm when installed for a clean interior appearance.
- Hinge and mounting plate feature side to side, height and depth adjustment for fine tuning of door spacing.
- Hinges require Pattern B with Insert Holes concealed hinge boring unless otherwise noted.
- Blum hinges carry a limited lifetime warranty.
- Lead-time is 5 days.

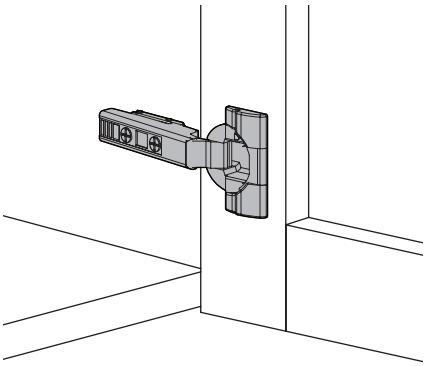

CLIP top BLUMOTION 110° hinge
EXPANDO in-line mounting plate

Blum INSERTA 110° Hinges

- Hinge and in-line mounting plate system for standard frameless wall, base and tall cabinetry. Will not work in angle or specialty frameless cabinetry.
- 110° opening angle.
- Part number: 2103574A.

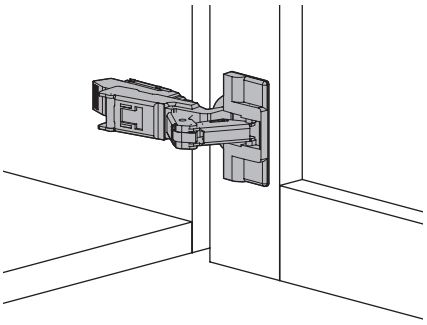

CLIP top 170° corner hinge
EXPANDO in-line mounting plate

Blum INSERTA 170° Corner Hinges

- Provides full access to corner cabinet interiors.
- 170° opening angle.
- Does not include soft close feature.
- INSERTA feature is not available on mounting plate. Kit includes installation screws.
- Part number: 2103575A.

Please refer to pricing through Con-Nex, our online ordering program

Blum Frameless Cabinetry Hinge Program (continued)

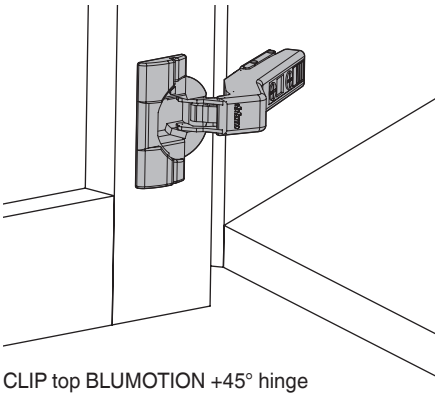

CLIP top BLUMOTION +45° hinge
EXPANDO in-line mounting plate

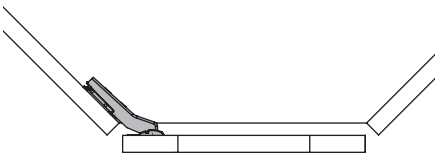

Top view

Blum INSERTA Positive +45° Angle Hinge

- Hinge and in-line mounting plate system for frameless diagonal corner or any angle cabinet with a 45° front.
- 110° opening angle.
- Part number: 2103581A.

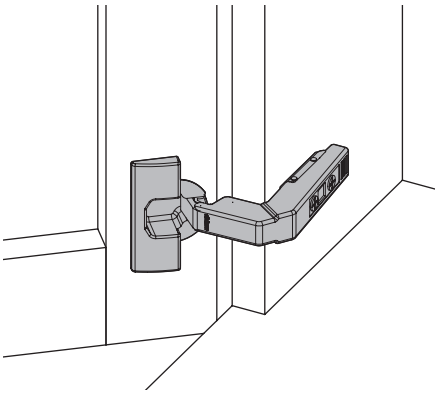

CLIP top 95° Overlay Blind Corner hinge
EXPANDO in-line mounting plate

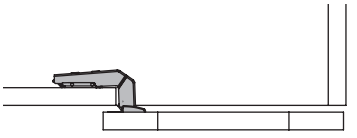

Top view

Blum INSERTA 95° Overlay Blind Corner Hinge

- Hinge and in-line mounting plate system for wall or base blind corner cabinets.
- 95° opening angle.
- Part number: 2103582A.

Please refer to pricing through Con-Nex, our online ordering program

Blum Frameless Cabinetry Hinge Program (continued)

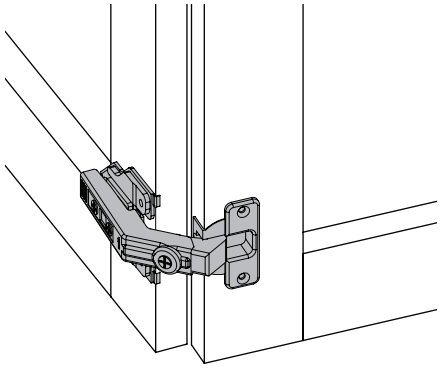

CLIP top 60° Bi-Fold hinge
Frame adaptor mounting plate

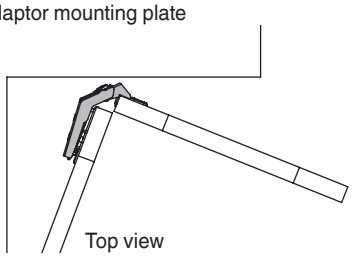

Top view

Blum 60° Bi-Fold Door Hinge

- Hinge and edge style mounting plate to join two doors in a bi-fold application.
- INSERA installation feature is not available on hinge or mounting plates. Kit includes installation screws.
- Use with an 170° corner hinge on adjacent door (part number 2103575A).
- Does not include soft close feature.
- Requires Bi-Fold Hinge Bore without Insert Holes – See Section 7.
- 60° opening angle.
- Part number: 2103583A.

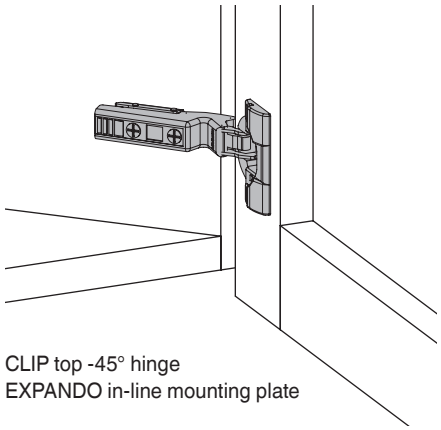

CLIP top -45° hinge
EXPANDO in-line mounting plate

Blum INSERTA Negative -45° Hinge

- Hinge and in-line mounting plate system for frameless angle cabinets or cabinet hinging on the opposite side of a 45°.
- 110° opening angle.
- Part number: 2103584A.

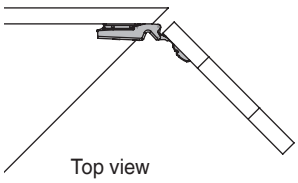

Top view

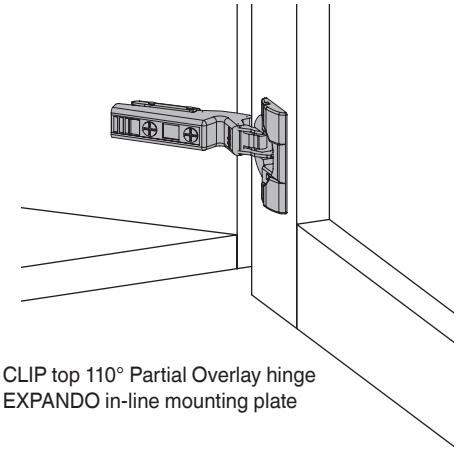

CLIP top 110° Partial Overlay hinge
EXPANDO in-line mounting plate

Blum INSERTA 110° Partial Overlay Hinge

- Hinge and in-line mounting plate system for frameless applications where there is a center partition.
- 110° opening angle.
- Part number: 2103675A.

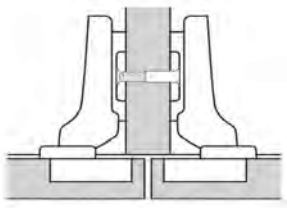

Top view

Please refer to pricing through Con-Nex, our online ordering program

Blum AVENTOS Door Lift System Hardware

- Blum's AVENTOS Door Lift Systems are available for hinge upward applications.
- AVENTOS HK models provide all the necessary hardware to install lift up door access for wall and tall cabinets. AVENTOS HK-XS models utilize conventional door hinges.
- Kits are designed to accommodate different door design types, weights and overlay options as well as for framed or frameless cabinet construction.
- All AVENTOS mechanisms have an integrated BLUMOTION soft close feature and include installation instructions and screws.

To determine which AVENTOS Lift System is suited for your particular application, two reference sources are available:

- A file containing our AVENTOS Lift System Calculator is provided on Conestoga's Customer Business Portal under the Marketing Resources tab. Use this tool to calculate the weight of your door and select the appropriate lift kit for your application.
- Using the charts which correspond to the different AVENTOS models below, determine the weight of the door then calculate the Blum Power Factor required to adequately lift the door as follows:
  Door Weight + (Handle/Pull Weight X 2) = Subtotal X Door Height = Power Factor
  Specie and Door Weight reference chart applies to both HK-XS and HK lift systems

Specie & Door Design Weight (approx. weight of 1 sq. ft. 3/4" thick door)				
Specie (all grades)	**Slab Design**	**TW-series Design**	**CRP-series Design**	**Frame Only***
Alder	1.6 lb.	1.2 lb.	1.5 lb.	1.0 lb.
Birch (Red, White)	2.8 lb.	2.1 lb.	2.6 lb.	1.7 lb.
Cherry	2.5 lb.	1.9 lb.	2.3 lb.	1.5 lb.
Hickory	3.2 lb	2.4 lb.	3.0 lb.	2.0 lb
Maple (Hard, Soft)	2.9 lb.	2.1 lb.	2.7 lb.	1.8 lb.
MDF	3.8 lb	3.0 lb	3.6 lb	2.7 lb.
Pine	1.6 lb.	1.5 lb.	1.9 lb.	1.3 lb.
Oak, Red & White	3.1 lb.	2.1 lb.	2.9 lb.	1.9 lb.
Walnut	2.6 lb.	2.0 lb.	2.5 lb.	1.6 lb.
Allure DLV	2.6 lb.	1.8 lb.	NA	1.5 lb.
High Gloss (Slab)	3.8 lb.	NA	NA	NA
Intrigue TTS	2.6 lb.	1.9 lb.	NA	1.6 lb.
Super Matte (Slab)	3.8 lb.	NA	NA	NA
Strata TTS	2.6 lb.	1.9 lb.	NA	1.6 lb.
Vogue TTS	2.6 lb.	1.9 lb.	NA	1.6 lb.

*Does not include weight of glass.

Blum AVENTOS Door Lift System Hardware (continued)

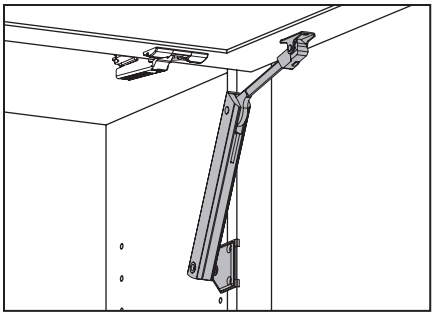

Blum AVENTOS HK-XS

- XS-Series utilize conventional hinges (not included).
- Units are symmetrical and can be installed on one or both sides.
- Cabinet heights from 9-1/2" to 24" and cabinet widths up to 72".
- Minimum interior depth required is 5".
- Four AVENTOS kits provide all the necessary hardware designed for different weight doors for both framed and frameless cabinet construction.

AVENTOS HK-XS Reference Chart

Power Factor (1 Lift)	Power Factor (2 Lifts)	Door Weight	Part No.
Framed Cabinet Construction			
17 – 84	34 – 124	Light	2103578A
113 – 180	225 – 336	Heavy	2103580A
Frameless Cabinet Construction			
17 – 84	34 – 124	Light	2103577A
113 – 180	225 – 336	Heavy	2103579A

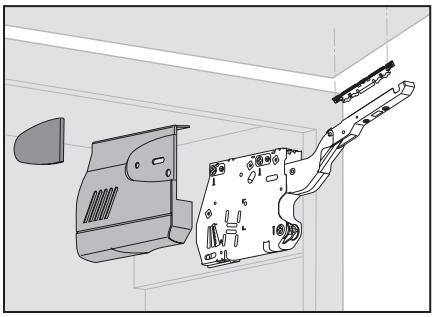

Blum AVENTOS HK

- Simple, virtually tool free assembly and easy adjustment.
- Specifically designed for frameless wall and tall utility applications.
- Cabinet heights from 11-13/16" to 24" and cabinet widths to 72".
- Minimum cabinet interior depth required is 8-1/4".

AVENTOS HK Reference Chart

Power Factor	HK Kit Series	Part No.
43 – 99	2300	2100350A
100 – 174	2500	2100351A
175 – 349	2700	2100352A
350 – 792	2900	2100353A

AVENTOS Accessory Items

Description	Part No.
Mounting Hardware Set	2100354A
100° Restriction Clip	2100355A
75° Restriction Clip	2100356A

Please refer to pricing through Con-Nex, our online ordering program

Entry Level Range Hoods

Select Range Hood

- Hood must be secured to adjacent cabinets.
- Manufactured from solid wood and wood veneers.
- Includes 24 gauge silver metallic liner.
- Liner accommodates the following Broan ventilators: 250CFM - RHVBF300SS
  400CFM - RHVB400SS
  Contact Omega National Products: (800) 533-8809.
- Lead-time 10 days unfinished, add 5-6 days for finishing.
- Available in Alder, Cherry, Hard Maple and Red Oak.
- **Custom sizes not available.**

Height	Available Sizes	
24"	30x24	36x24

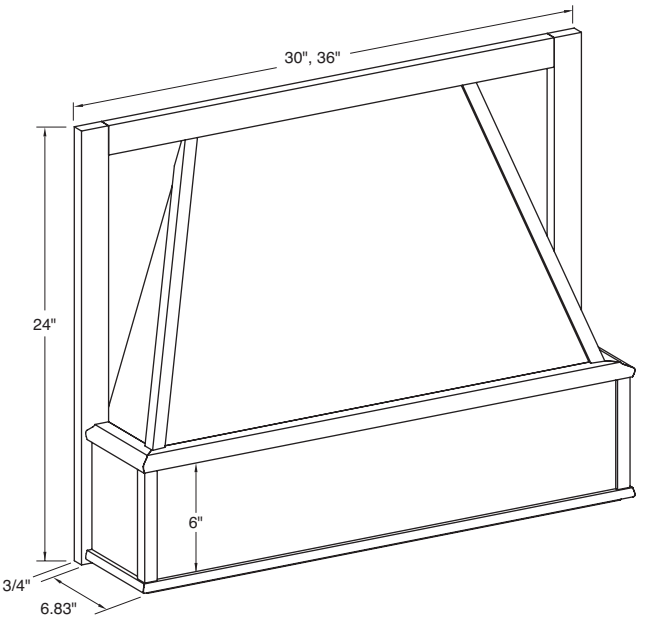

Batten Select Range Hood

- Hood must be secured to adjacent cabinets.
- Manufactured from solid wood and wood veneers.
- Includes 24 gauge silver metallic liner.
- Liner accommodates the following Broan ventilators:

  250CFM - RHVBF300SS
  400CFM - RHVB400SS
  Contact Omega National Products: (800) 533-8809.
- Lead-time 10 days unfinished, add 5-6 days for finishing.
- Available in Alder, Cherry, Hard Maple and Red Oak.
- **Custom sizes not available.**

Height	Available Sizes	
24"	30x24	36x24

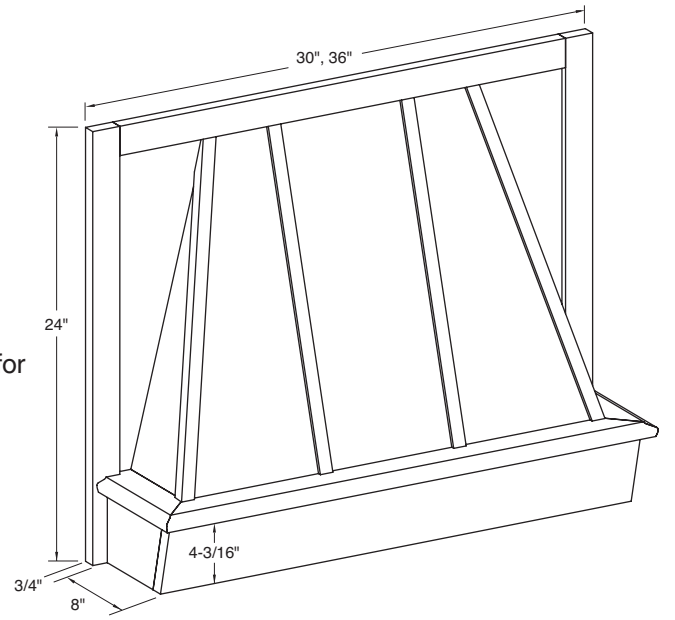

Please refer to pricing through Con-Nex, our online ordering program

Range Hoods

Estate Canopy Hood

- Must be secured to adjacent cabinets or wall on both sides.
- Manufactured from solid wood and wood veneers.
- Includes 24 gauge silver metallic liner.
- Liner accommodates the following Broan ventilators:
  250CFM - RHVBF300SS
  400CFM - RHVB400SS
  Contact Omega National Products:
  (800) 533-8809.
- Lead-time 15 days unfinished, add 7 days for finishing.
- Available in Cherry, Hard Maple, Red Oak and Rift Cut White Oak .
- **Custom sizes not available.**

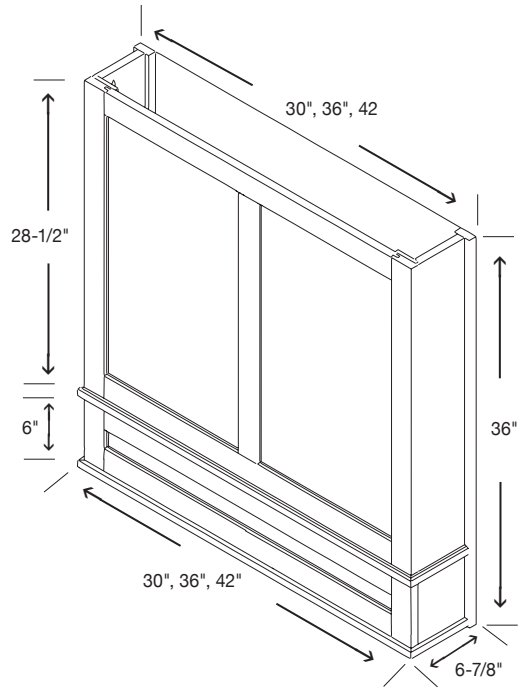

Height	Available Sizes		
36"	30x36	36x36	42x36

Modern Tapered Hood w/ Detached Chimney

- Installs easily using Omega's standard French Cleat Hanging System.
- Manufactured from solid wood and veneer core plywood.
- Chimney and base ship in separate cartons. Moulding at top of chimney is attached with 4 screws allowing for easy removal if the top needs to be trimmed to height. Mouldings on the side of the chimney are shipped loose to allow for trimming if needed.
- 6" hardwood base.
- Wood corner mouldings attached.
- Includes silver metallic powder-coated liner.
- Liner accommodates the following Broan ventilators:
  250 CFM - RHVBF300SS
  400 CFM - RHVB400SS
  600 CFM - RHVB600SSV
  Contact Omega National Products:
  (800) 533-8809.
- Lead-time 15 days unfinished, add 5-6 days for finishing.
- Available in Cherry, Hard Maple, PGHM Hybrid*, Red Oak and Rift Cut White Oak.
- **Custom sizes not available.**

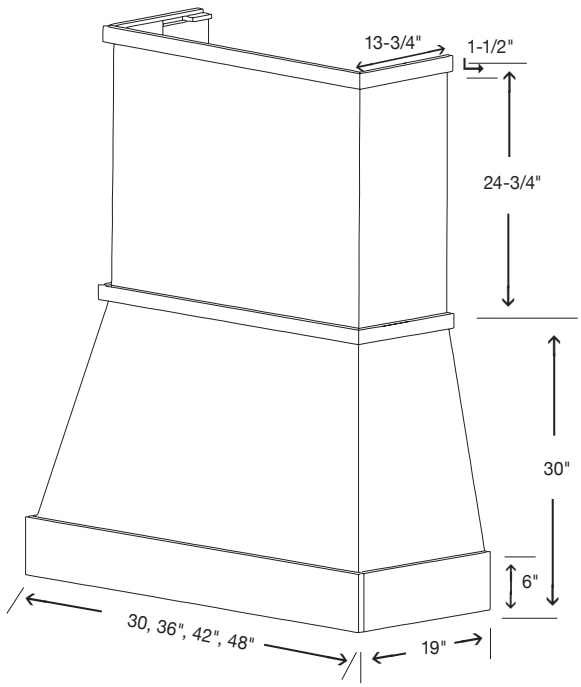

Height	Available Sizes			
30"	30x30	36x30	42x30	48x30

*MDF w/Maple mouldings.

Please refer to pricing through Con-Nex, our online ordering program

Range Hoods (continued)

Tapered Farmhouse Hood w/Detached Chimney

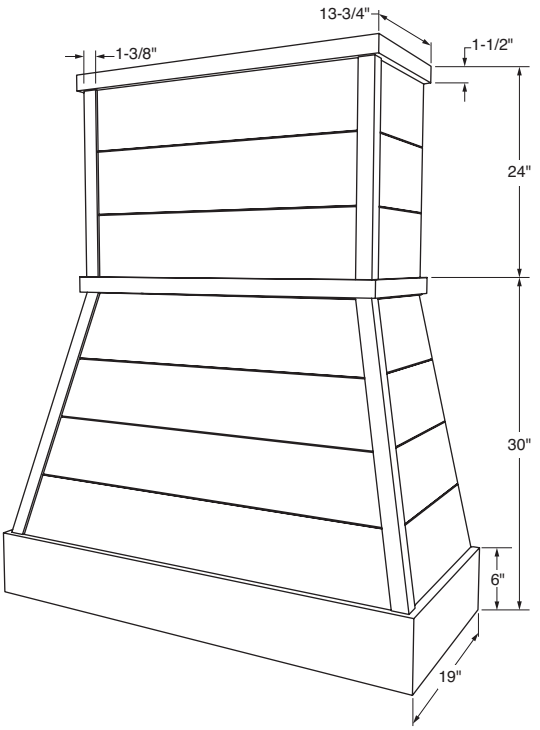

- Installs easily using Omega's standard French Cleat Hanging System.
- Manufactured from solid wood and veneer core plywood.
- Chimney and base ship in separate cartons. Moulding at top of chimney is attached with 4 screws allowing for easy removal if the top needs to be trimmed to height. Mouldings on the side of the chimney are shipped loose to allow for trimming if needed.
- 6" hardwood base.
- Shiplap spaced at 6" intervals.
- 1-3/8" wood corner mouldings attached.
- Includes silver metallic powder-coated liner.
- Liner accommodates the following Broan ventilators:
  250 CFM - RHVBF300SS
  400 CFM - RHVB400SS
  600 CFM - RHVB600SSV
  Contact Omega National Products: (800) 533-8809.
- Lead-time 15 days unfinished, add 5-6 days for finishing.
- Available in Alder, Cherry, Hard Maple, PGHM Hybrid*, Red Oak and Rift Cut White Oak.
- **Custom sizes not available.**

Height	Available Sizes			
30"	30x30	36x30	42x30	48x30

*MDF w/Maple mouldings.

Please refer to pricing through Con-Nex, our online ordering program

Range Hoods (continued)

Artisan Range Hood

- Installs easily using Omega's standard French Cleat Hanging System.
- Manufactured from solid wood and wood veneers.
- Up to 12" may be trimmed from the top of the chimney.
- Includes silver metallic powder-coated liner.
- Liner accommodates the following Broan ventilators:
  250 CFM - RHVBF300SS
  400 CFM - RHVB400SS
  600 CFM - RHVB600SSV
  Contact Omega National Products: (800) 533-8809.
- Lead-time 15 days unfinished, add 5-6 days for finishing.
- Available in Cherry, Hard Maple, PGHM Hybrid*, Red Oak, and Rift Cut White Oak.
- **Custom sizes not available.**

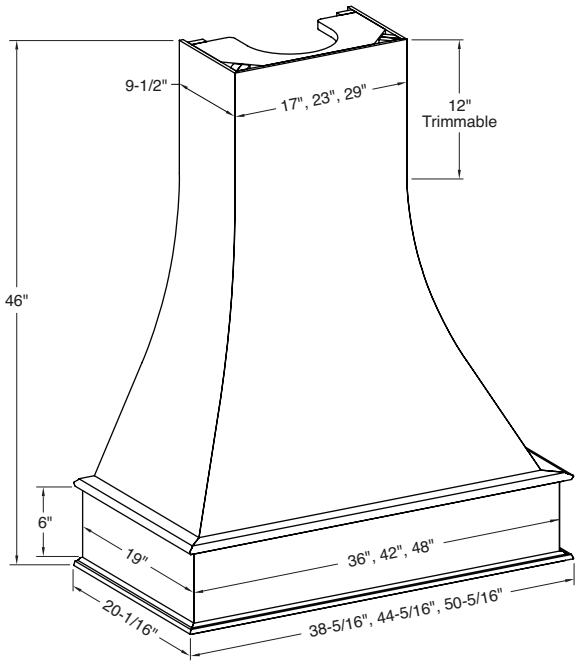

Height	Available Sizes			
46"	30x46	36x46	42x46	48x46

*MDF w/Maple mouldings.

Waterfall Hood

- Installs easily using Omega's standard French Cleat Hanging System.
- Manufactured from solid wood and wood veneers.
- Up to 12" may be trimmed from the top of the chimney.
- Includes silver metallic powder-coated liner.
- Liner accommodates the following Broan ventilators:
  250 CFM - RHVBF300SS
  400 CFM - RHVB400SS
  600 CFM - RHVB600SSV
  Contact Omega National Products: (800) 533-8809.
- Lead-time 15 days unfinished, add 5-6 days for finishing.
- Available in Cherry, Hard Maple, PGHM Hybrid*, Red Oak and Rift Cut White Oak.
- **Custom sizes not available.**

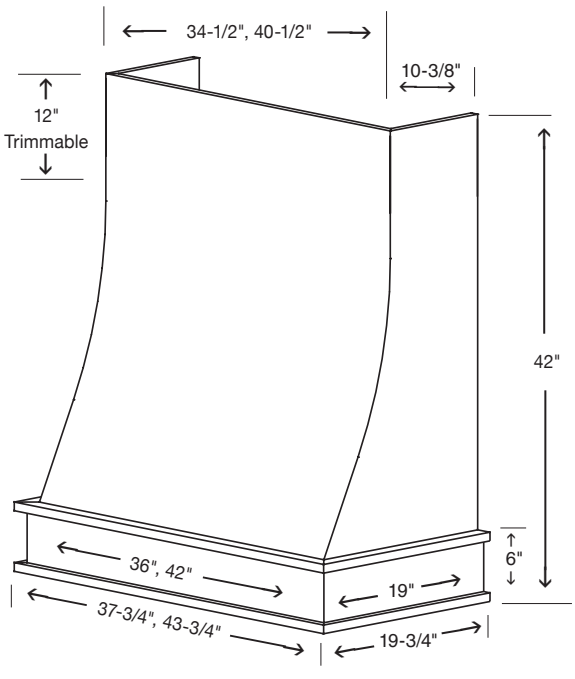

Height	Available Sizes	
42"	36x42	42x42

*MDF w/Maple mouldings.

Please refer to pricing through Con-Nex, our online ordering program

Stanisci Design Range Hoods

Stanisci Design is the leading manufacturer of wood range hoods for the custom kitchen industry. This program allows for convenient ordering of custom range hoods and ventilation units. Conestoga's published offering includes several popular hood designs with panel raise and bead options. Both plywood and raised panel hoods are available in a wide variety of heights and widths.

Program Details

- Range hoods are available unfinished or finished; see Finishing Program Section for finish options and pricing.
- Most prefinished hoods will ship from Conestoga's Kenly, N.C. facility.
- Custom species include Hickory and Rustic Knotty Alder. Contact Special Designs for other specie availability.
- Custom sizes and designs are available. Contact Special Designs for a quote.

  Examples of custom designs:

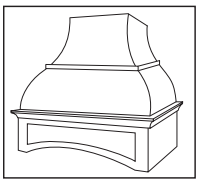

Hood shown with single panel valance

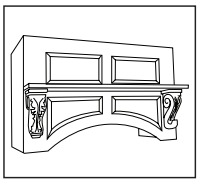

Hood shown with integrated corbels

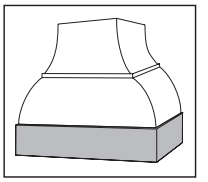

Hood shown with stainless steel base

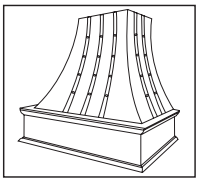

Hood shown with metal banding

- Liners are not included with hood unless otherwise noted. Stainless steel ventilation units and liners are available from Stanisci Design with discounted Conestoga program pricing. Contact Stanisci Design at (248) 572-6880.
- Recommended ventilator: Stainless steel units from 300 to 1200 CFM are available through Stanisci Design (248) 572-6880.
- Stanisci hoods are available in catalog format, compatible with 2Configure and 20/20 Design software. Contact your Sales Representative for information.

PLEASE NOTE: All Stanisci Range Hoods should be mounted no closer than 30" above cook tops, although some cook tops require additional clearance. Please check local building codes and appliance specifications.

Removable Options

Removable Applied Panel

- Available on I-Series hood design only.
- Allows for easy installation and access for Building Inspectors.
- Panel features applied moulding for finished look after installation.
- Specify "Removable Panel Option", Upcharge applies.

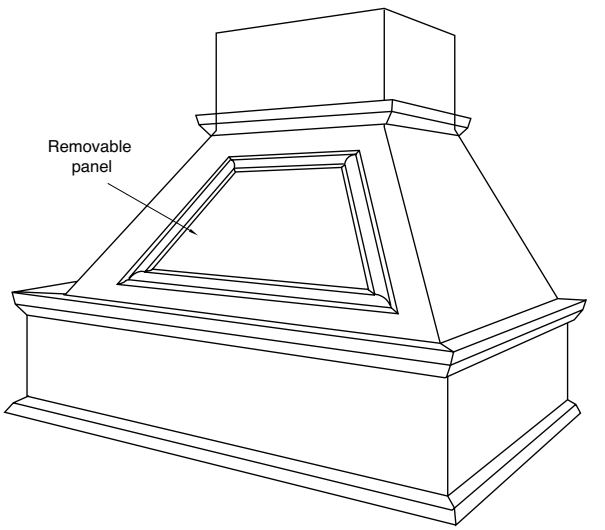

Please refer to pricing through Con-Nex, our online ordering program

Stanisci Design Range Hoods (continued)

Removable Front

- Available on P and Z200 Series hoods at no additional charge.
- With this option, the entire front fascia lifts straight up for easy removal. When installed, the hood face is secured in place with concealed clips.
- If this option is selected, the depth of the P and Z200 box will be modified to 16" deep. Overall hood depth will remain the same as standard depth.
- No additional lead-time required.
- When ordering, specify the hood design then "Removable Option".

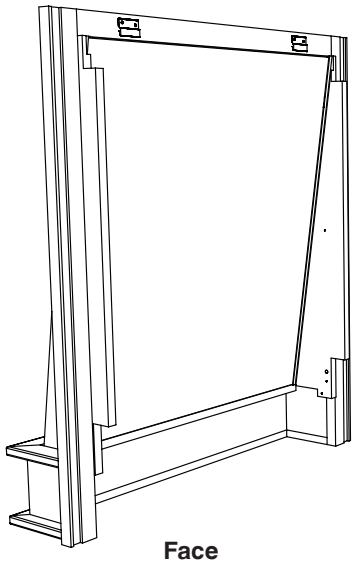

Face

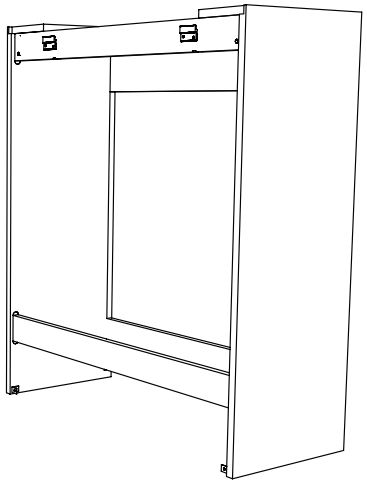

Box

Removable Top

- Available on the BHW, CHW, CHWB, E, FX2HW, FX2PL, G, GRA, T and TRA Series hoods at no additional charge.
- This option allows the base of the hood to be installed separately, followed by the ventilation. After ventilation hookup has been completed, the top portion of the hood can be lowered into place and secured to the base.
- No additional lead-time required.
- When ordering, specify the hood design then “Removable Option”.

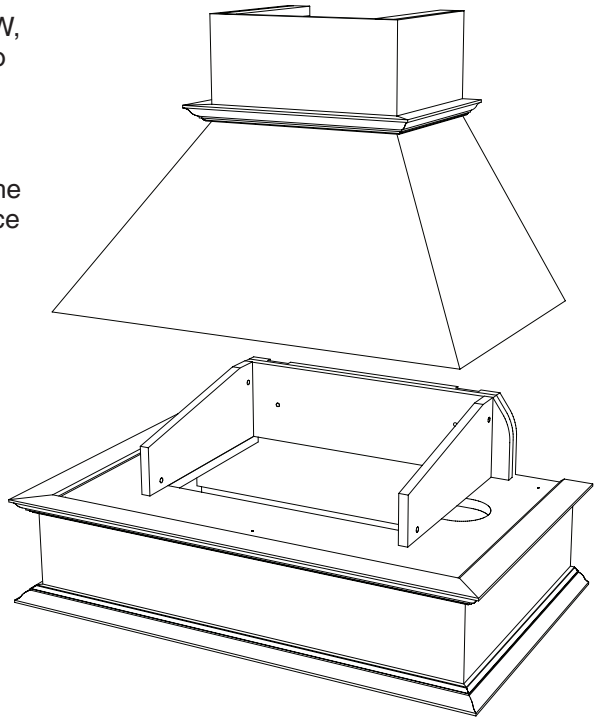

Stanisci Design Range Hoods (continued)

Optional Moulding Packages

- Several hoods are available with a choice of Classic, Simple or Basic moulding packages. See illustrations below for examples of differences between the three moulding profiles.
- Classic package is a more traditional style moulding. Simple and Basic packages are made for contemporary/transitional kitchens.
- Moulding packages have no effect on pricing, lead-time or overall dimensions.
- Moulding packages available on all Stanisci hoods except B, BX, BXB, CHW, CHWB, E3, FX, FXBPUP, FX2HW, M, VCHM-AV, VCHM-SV and VCHM-VRS hoods.
- Moulding packages below are available for E, FX2PL, G, GRA, H2, I, S, SRA, T and TRA hoods (P and Z200 available in Basic package only).
- When ordering a range hood specify the desired moulding package.



Classic Package



Simple Package



Basic Package

Antiquing, Distressing and Wear Sanding

To allow our customers to purchase prefinished Stanisci range hoods with the same overall appearance of their doors, Conestoga offers a modified version of our Antiquing, Distressing and Wear Sanding Options on the solid wood portions of Stanisci hoods.

- These treatment options available with Stanisci-brand range hoods only.
- Not available on Paint Grade Hard Maple Hybrid specie hoods.
- Availability of these options varies by hood design.
- Wear Sanding Design Charge is.
- Antiquing Design Charges and square foot Material Charges are equal to published finishing fees.
- Distressing Design Charges and square foot Material Charges are equal to published finishing fees.

Stanisci Design Range Hoods (continued)

VCHIM Series Hood – Straight Valance

- Stylish straight valance complements traditional or contemporary designs.
- Designed to fit up to a 9 foot ceiling.
- Plywood chimney and upper. Solid wood apron.
- 17-1/4" chimney can be trimmed to desired height and is shipped unattached.
- Lead-time 5 days unfinished, add 7 days for finishing.
- Fixed panel standard. Removable top not available.
- Ventilators available through Stanisci Design.
- Available in Alder, Cherry, Hard Maple, PGHM Hybrid and Red Oak.
- **Custom sizes not available.**

Height	VCHIM-SV Series Part Number			
42"	SV-30x42	SV-36x42	SV-42x42	SV-48x42

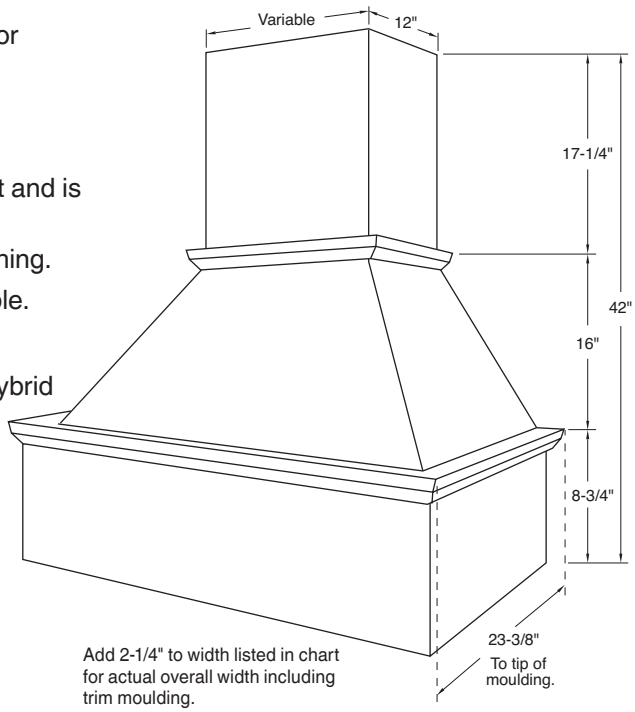

VCHIM Series Hood – Arched Valance

- Stylish arched valance complements traditional and transitional designs.
- Arched valance has Regular bead, G-Cove Raise - no options.
- Designed to fit up to a 9 foot ceiling.
- 17-1/4" plywood chimney can be trimmed to desired height and is shipped unattached.
- Lead-time 5 days unfinished, add 7 days for finishing.
- Fixed panel standard. Removable top not available.
- Ventilators available through Stanisci Design.
- Available in Alder, Cherry, Hard Maple, PGHM Hybrid and Red Oak.
- **Custom sizes not available.**

Height	VCHIM-AV Series Part Number			
42"	AV-30x42	AV-36x42	AV-42x42	AV-48x42

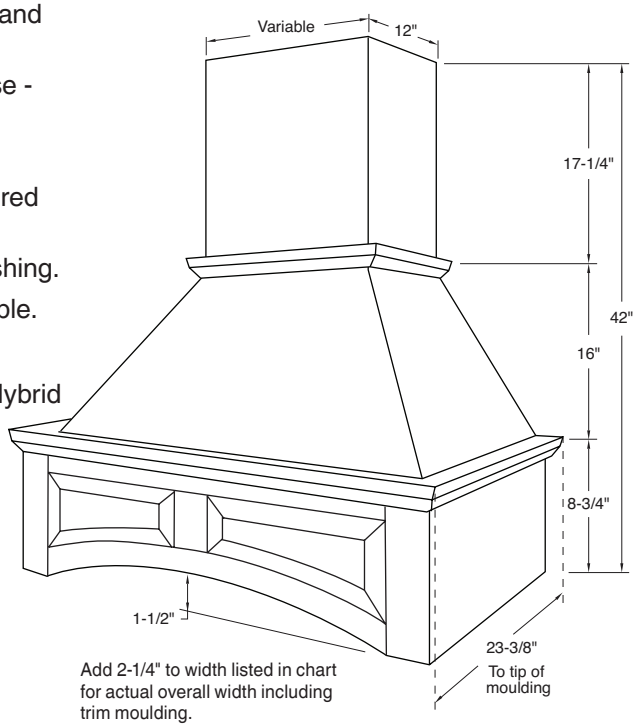

Please refer to pricing through Con-Nex, our online ordering program

Stanisci Design Range Hoods (continued)

VCHIM Series Hood – Two Panel Straight Valance

- Stylish straight valance complements transitional or traditional designs.
- Two panel straight valance has Square bead, flat panel - no options.
- Designed to fit up to a 9 foot ceiling.
- 17-1/4" plywood chimney can be trimmed to desired height and is shipped unattached.
- Lead-time 5 days unfinished, add 7 days for finishing.
- Fixed panel standard. Removable top not available.
- Ventilators available through Stanisci Design.
- Available in Alder, Cherry, Hard Maple, PGHM Hybrid and Red Oak.
- **Custom sizes not available.**

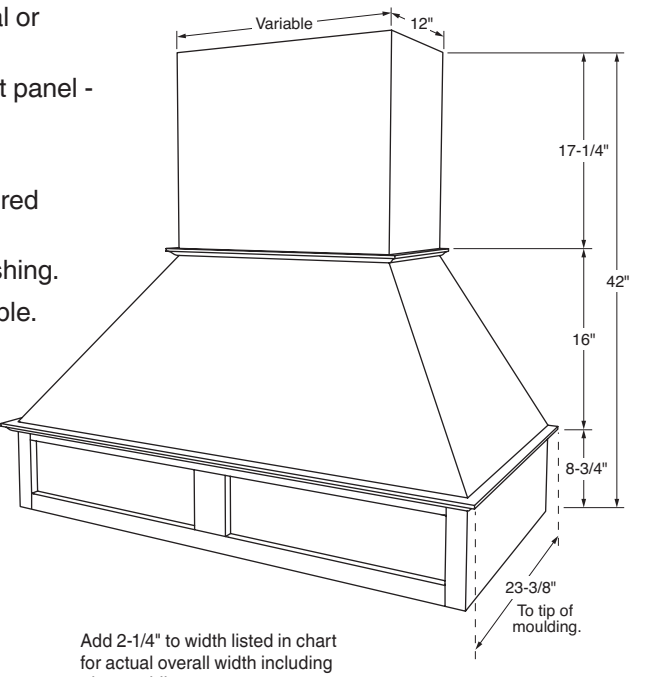

Add 2-1/4" to width listed in chart for actual overall width including trim moulding.

Height	VCHIM-VRS Series Part Number			
42"	VRS-30x42	VRS-36x42	VRS-42x42	VRS-48x42

Please refer to pricing through Con-Nex, our online ordering program

Stanisci Design Range Hoods (continued)

BX – Standard Hood

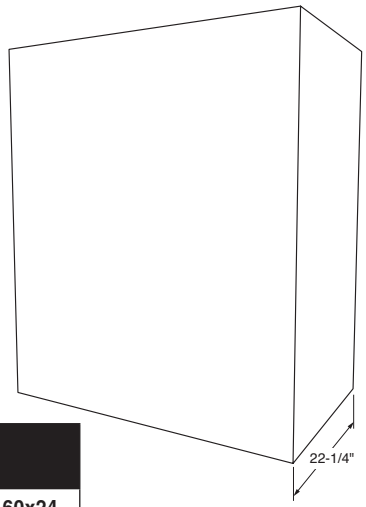

- Horizontal grain only.
- Lead-time 10 days unfinished, add 7 days for finishing.
- Fixed panel only.
- Moulding package not available.
- Available in Alder, Cherry, Hard Maple, PGHM Hybrid, Quarter Sawn White Oak, Red Oak, Rift Cut White Oak, Walnut and White Oak.
- **Custom sizes available through Special Designs.**

Height	BX-Series Part Number					
24"	BX-30x24	BX-36x24	BX-42x24	BX-48x24	BX-54x24	BX-60x24
30"	BX-30x30	BX-36x30	BX-42x30	BX-48x30	BX-54x30	BX-60x30
36"	BX-30x36	BX-36x36	BX-42x36	BX-48x36	BX-54x36	BX-60x36
42"	BX-30x42	BX-36x42	BX-42x42	BX-48x42	BX-54x42	BX-60x42
48"	BX-30x48	BX-36x48	BX-42x48	BX-48x48	BX-54x48	BX-60x48

BXB – Horizontal Beading Hood

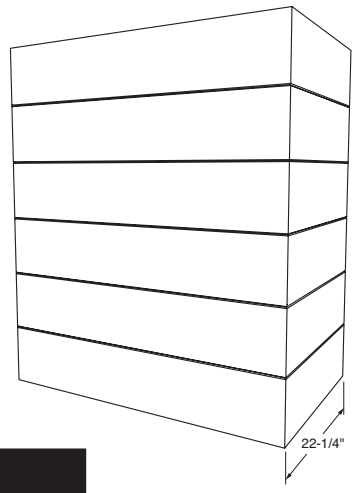

- BXB-Series is a shiplap hood.
- Horizontal grain only with shiplap style beading.
- Width face of shiplap moulding varies by hood height.
- Lead-time 10 days unfinished, add 7 days for finishing.
- Fixed panel only.
- Moulding package not available.
- Available in Alder, Cherry, Hard Maple, PGHM Hybrid, Quarter Sawn White Oak, Red Oak, Rift Cut White Oak, Walnut and White Oak.
- **Custom sizes available through Special Designs.**

Height	BXB-Series Part Number					
24"	BXB-30x24	BXB-36x24	BXB-42x24	BXB-48x24	BXB-54x24	BXB-60x24
30"	BXB-30x30	BXB-36x30	BXB-42x30	BXB-48x30	BXB-54x30	BXB-60x30
36"	BXB-30x36	BXB-36x36	BXB-42x36	BXB-48x36	BXB-54x36	BXB-60x36
42"	BXB-30x42	BXB-36x42	BXB-42x42	BXB-48x42	BXB-54x42	BXB-60x42
48"	BXB-30x48	BXB-36x48	BXB-42x48	BXB-48x48	BXB-54x48	BXB-60x48

Please refer to pricing through Con-Nex, our online ordering program

AX3 – Series Hood

- AX3-Series is a shiplap hood.
- Horizontal grain only.
- Spacing is 13/16" between slats. All slats will be equal height.
- Lead-time 10 days unfinished, add 7 days for finishing.
- Fixed panel only.
- Moulding package not available.
- Available in Alder, Cherry, Hard Maple, PGHM Hybrid, Quarter Sawn White Oak, Red Oak, Rift Cut White Oak, Walnut and White Oak.
- **Custom sizes available through Special Designs.**

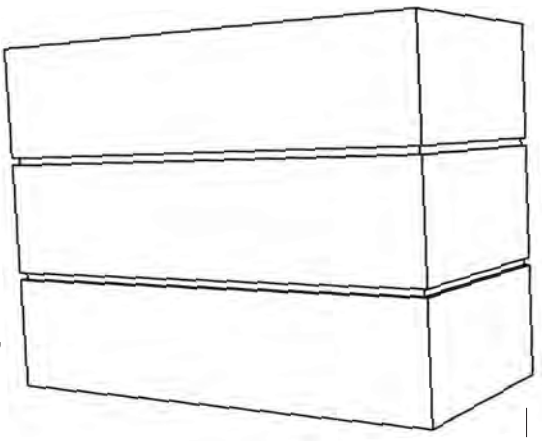

Height	AX3-Series Part Number					
24"	AX3-31x24	AX3-37x24	AX3-43x24	AX3-49x24	AX3-55x24	AX3-61x24
30"	AX3-31x30	AX3-37x30	AX3-43x30	AX3-49x30	AX3-55x30	AX3-61x30
36"	AX3-31x36	AX3-37x36	AX3-43x36	AX3-49x36	AX3-55x36	AX3-61x36
42"	AX3-31x42	AX3-37x42	AX3-43x42	AX3-49x42	AX3-55x42	AX3-61x42
48"	AX3-31x48	AX3-37x48	AX3-43x48	AX3-49x48	AX3-55X48	AX3-61X48

Stanisci Design Range Hoods (continued)

CHW – Standard Hood

- Horizontal grain panel and valance only.
- 6" hardwood apron in matching specie only.
- Lead-time 10 days unfinished, add 7 days for finishing.
- Fixed panel standard. Removable top optional.
- Moulding package not available.
- Available in Alder, Cherry, Hard Maple, PGHM Hybrid, Quarter Sawn White Oak, Red Oak, Rift Cut White Oak, Walnut and White Oak.
- **Custom sizes available through Special Designs.**

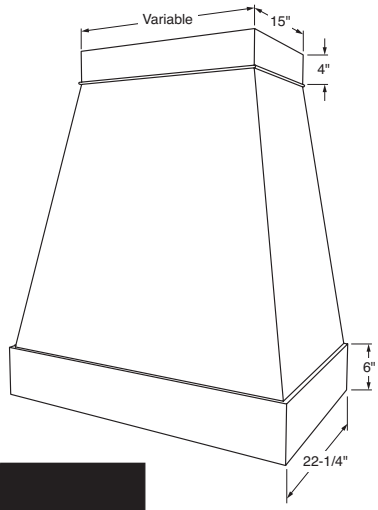

Height	CHW-Series Part Number					
24"	CHW-30x24	CHW-36x24	CHW-42x24	CHW-48x24	CHW-54x24	CHW-60x24
30"	CHW-30x30	CHW-36x30	CHW-42x30	CHW-48x30	CHW-54x30	CHW-60x30
36"	CHW-30x36	CHW-36x36	CHW-42x36	CHW-48x36	CHW-54x36	CHW-60x36
42"	CHW-30x42	CHW-36x42	CHW-42x42	CHW-48x42	CHW-54x42	CHW-60x42
48"	CHW-30x48	CHW-36x48	CHW-42x48	CHW-48x48	CHW-54x48	CHW-60x48
54"	CHW-30x54	CHW-36x54	CHW-42x54	CHW-48x54	CHW-54x54	CHW-60x54

CHWB – Horizontal Beading

- CHWB-Series is a shiplap style hood.
- Horizontal grain only with shiplap style beading.
- 6" hardwood apron in matching specie only.
- Width face of shiplap moulding varies by hood height.
- Lead-time 10 days unfinished, add 7 days for finishing.
- Fixed panel standard. Removable top optional.
- Moulding package not available.
- Available in Alder, Cherry, Hard Maple, PGHM Hybrid, Quarter Sawn White Oak, Red Oak, Rift Cut White Oak, Walnut and White Oak.
- **Custom sizes available through Special Designs.**

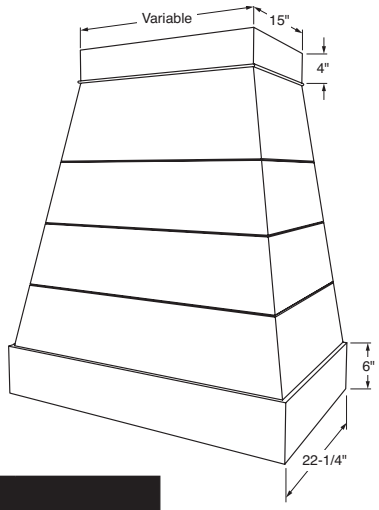

Height	CHWB-Series Part Number					
24"	CHWB-30x24	CHWB-36x24	CHWB-42x24	CHWB-48x24	CHWB-54x24	CHWB-60x24
30"	CHWB-30x30	CHWB-36x30	CHWB-42x30	CHWB-48x30	CHWB-54x30	CHWB-60x30
36"	CHWB-30x36	CHWB-36x36	CHWB-42x36	CHWB-48x36	CHWB-54x36	CHWB-60x36
42"	CHWB-30x42	CHWB-36x42	CHWB-42x42	CHWB-48x42	CHWB-54x42	CHWB-60x42
48"	CHWB-30x48	CHWB-36x48	CHWB-42x48	CHWB-48x48	CHWB-54x48	CHWB-60x48
54"	CHWB-30x54	CHWB-36x54	CHWB-42x54	CHWB-48x54	CHWB-54x54	CHWB-60x54

Please refer to pricing through Con-Nex, our online ordering program

Stanisci Design Range Hoods (continued)

G – Standard Hood

- G-Series is designed to fit 8 foot ceilings.
- Removable chimney may be trimmed to desired height.
- Lead-time 10 days unfinished, add 7 days for finishing.
- Fixed panel standard. Removable top optional.
- Available in Alder, Cherry, Hard Maple, PGHM Hybrid, Quarter Sawn White Oak, Red Oak, Rift Cut White Oak, Walnut and White Oak.
- **Custom sizes available through Special Designs.**

Height	G-Series Part Number				
	G-36	G-42	G-48	G-54	G-60
30"	G-36x30	G-42x30	G-48x30	G-54x30	G-60x30

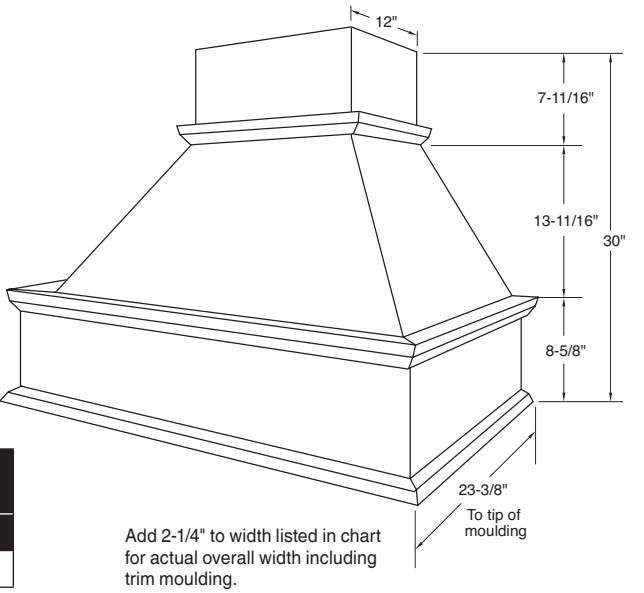

Add 2-1/4" to width listed in chart for actual overall width including trim moulding.

G – Raised Arch Hood

- G-Raised Arch Series is designed to fit 8 foot ceilings.
- Profile options –
  Framing Bead: Regular, Elite, Ogee, Square or F-1223.
  Panel Raise: Slant, G-Cove, RM, M-Bead or P-057.
- Removable chimney may be trimmed to desired height.
- Lead-time 10 days unfinished, add 7 days for finishing.
- Fixed panel standard. Removable top optional.
- Available in Alder, Cherry, Hard Maple, PGHM Hybrid, Quarter Sawn White Oak, Red Oak, Rift Cut White Oak, Walnut and White Oak.
- **Custom sizes available through Special Designs.**

Height	GRA-Series Part Number				
	GRA-36	GRA-42	GRA-48	GRA-54	GRA-60
32"	GRA-36x32	GRA-42x32	GRA-48x32	GRA-54x32	GRA-60x32

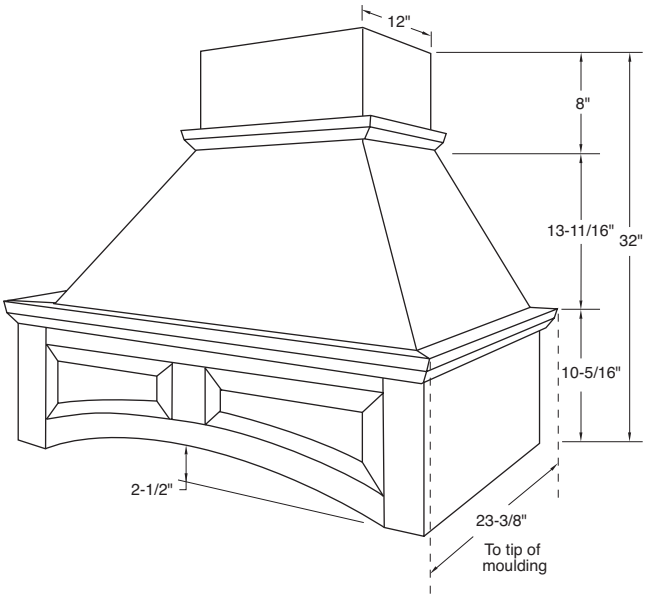

Add 2-1/4" to width listed in chart for actual overall width including trim moulding.

Please refer to pricing through Con-Nex, our online ordering program

Stanisci Design Range Hoods (continued)

T – Standard Hood

- T-Series is designed to fit 9 foot ceilings and taller.
- Removable chimney may be trimmed to desired height.
- Lead-time 10 days unfinished, add 7 days for finishing.
- Fixed panel standard. Removable top optional.
- Available in Alder, Cherry, Hard Maple, PGHM Hybrid, Quarter Sawn White Oak, Red Oak, Rift Cut White Oak, Walnut and White Oak.
- **Custom sizes available through Special Designs.**

Height	T-Series Part Number				
	T-36	T-42	T-48	T-54	T-60
42"	T-36x42	T-42x42	T-48x42	T-54x42	T-60x42

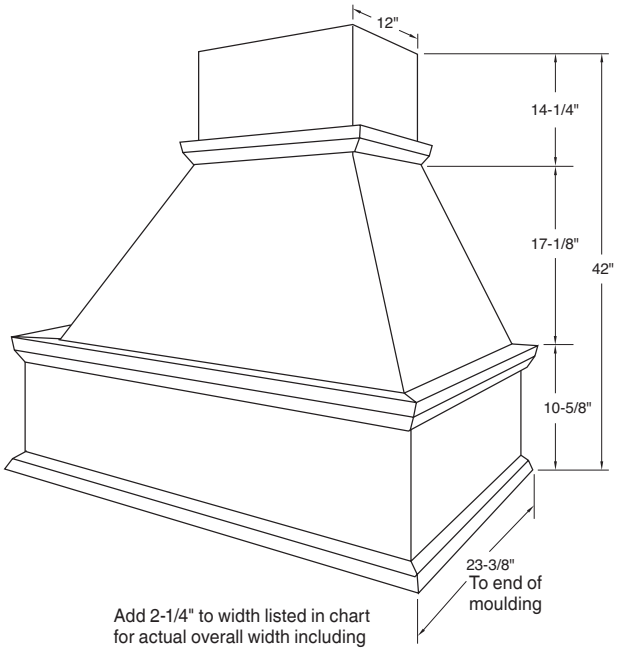

Add 2-1/4" to width listed in chart for actual overall width including trim moulding.

T – Raised Arch Hood

- T-Raised Arch Series is designed to fit 9 foot ceilings and taller.
- Profile options –

  Framing Bead: Regular, Elite, Ogee, Square or F-1223.
  Panel Raise: Slant, G-Cove, RM, M-Bead or P-057.
- Removable chimney may be trimmed to desired height.
- Lead-time 10 days unfinished, add 7 days for finishing.
- Fixed panel standard. Removable top optional.
- Available in Alder, Cherry, Hard Maple, PGHM Hybrid, Quarter Sawn White Oak, Red Oak, Rift Cut White Oak, Walnut and White Oak.
- **Custom sizes available through Special Designs.**

Height	TRA-Series Part Number				
	TRA-36	TRA-42	TRA-48	TRA-54	TRA-60
42"	TRA-36x42	TRA-42x42	TRA-48x42	TRA-54x42	TRA-60x42

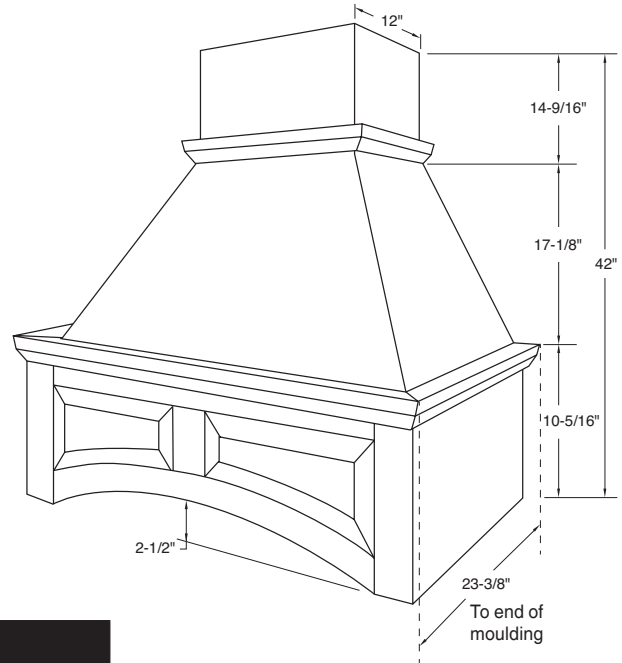

Add 2-1/4" to width listed in chart for actual overall width including trim moulding.

Please refer to pricing through Con-Nex, our online ordering program

Stanisci Design Range Hoods (continued)

I – Series (Four-sided Island Hood)

- I-Series hood is designed to provide ventilation above an island range.
- Overall height must be provided when ordering I-Series.
- Prefinished hoods will be finished on all 4 sides.
- Includes installation hardware.
- Lead-time 10 days unfinished, add 7 days for finishing.
- Fixed panel standard. Removable panel optional.
- Available in Alder, Cherry, Hard Maple, PGHM Hybrid, Quarter Sawn White Oak, Red Oak, Rift Cut White Oak, Walnut and White Oak.
- **Custom sizes available through Special Designs.**

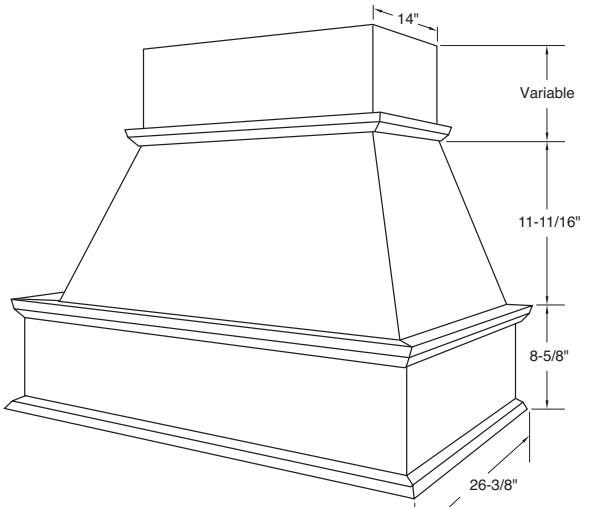

Add 2-1/4" to width listed in chart for actual overall width including trim moulding.

Specify Height	I-Series Part Number				
Width	I-36	I-42	I-48	I-54	I-60

M – Series Hood

- Will accommodate corbels up to 5" wide, 10-1/2" high and 6" deep under display shelf. See the Wood Accents and Ornament pages in Section 12 or the Art for Everyday catalog on the CBP for potential corbel selections.
- Profile options –
  Framing Bead: Regular, Elite, Ogee, Square or F-1223.
  Panel Raise: Slant, G-Cove, RM, M-Bead or P-057.
- Hood includes 6-3/4" deep display shelf, shipped unattached.
- Lead-time 10 days unfinished, add 7 days for finishing.
- Removable panel is standard.
- Available in Alder, Cherry, Hard Maple, PGHM Hybrid, Quarter Sawn White Oak, Red Oak, Rift Cut White Oak, Walnut and White Oak.
- **Custom sizes available through Special Designs.**

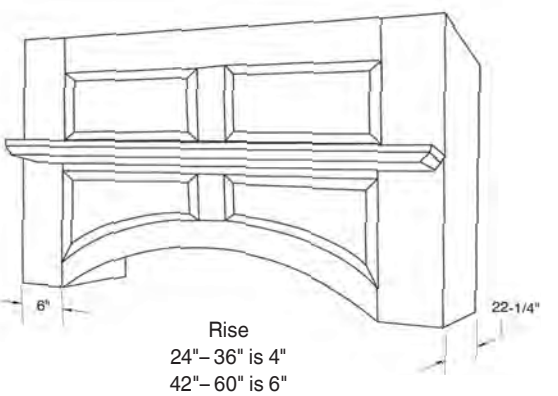

Rise
24"– 36" is 4"
42"– 60" is 6"

Height	M-Series Part Number					
24"	M-30x24	M-36x24	M-42x24	M-48x24	M-54x24	M-60x24
30"	M-30x30	M-36x30	M-42x30	M-48x30	M-54x30	M-60x30
36"	M-30x36	M-36x36	M-42x36	M-48x36	M-54x36	M-60x36
42"	M-30x42	M-36x42	M-42x42	M-48x42	M-54x42	M-60x42
48"	M-30x48	M-36x48	M-42x48	M-48x48	M-54x48	M-60x48

Please refer to pricing through Con-Nex, our online ordering program

Stanisci Design Range Hoods (continued)

S – Raised Hood w/Display Shelf

- Profile options –

  Framing Bead: Regular, Elite, Ogee, Square or F-1223.
  Panel Raise: Slant, G-Cove, RM, M-Bead or P-057.
- Display shelf depth is 6-1/8" to end of moulding.
- Lead-time 10 days unfinished, add 7 days for finishing.
- Removable panel only.
- Available in Alder, Cherry, Hard Maple, PGHM Hybrid, Quarter Sawn White Oak, Red Oak, Rift Cut White Oak, Walnut and White Oak.
- **Custom sizes available through Special Designs.**

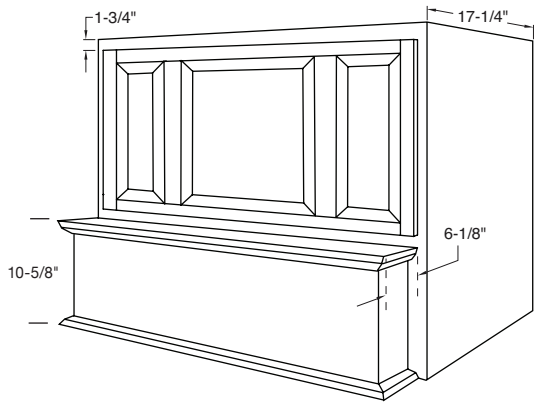

Height	S-Series Part Number						
24"	S-33x24	S-39x24	S-42x24	S-45x24	S-51x24	S-57x24	S-63x24
30"	S-33x30	S-39x30	S-42x30	S-45x30	S-51x30	S-57x30	S-63x30
36"	S-33x36	S-39x36	S-42x36	S-45x36	S-51x36	S-57x36	S-63x36
42"	S-33x42	S-39x42	S-42x42	S-45x42	S-51x42	S-57x42	S-63x42
48"	S-33x48	S-39x48	S-42x48	S-45x48	S-51x48	S-57x48	S-63x48

S – Raised Arch Hood w/Display Shelf

- Profile Options –
  Framing Bead: Regular, Elite, Ogee, Square or F-1223.
  Panel Raise: Slant, G-Cove, RM, M-Bead or P-057.
- Display shelf depth is 6-1/8" deep.
- Lead-time 10 days unfinished, add 7 days for finishing.
- Removable panel only.
- Available in Alder, Cherry, Hard Maple, PGHM Hybrid, Quarter Sawn White Oak, Red Oak, Rift Cut White Oak, Walnut and White Oak.
- **Custom sizes available through Special Designs.**

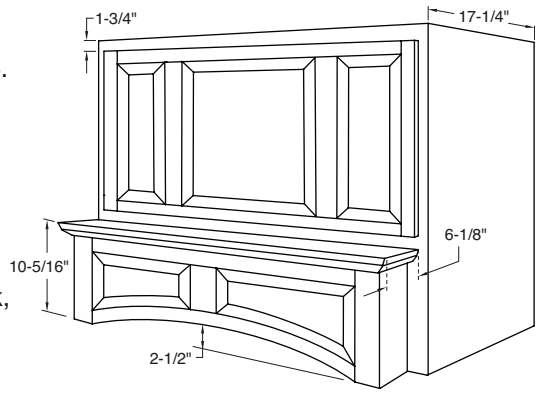

Height	SRA-Series Part Number						
24"	SRA-33x24	SRA-39x24	SRA-42x24	SRA-45x24	SRA-51x24	SRA-57x24	SRA-63x24
30"	SRA-33x30	SRA-39x30	SRA-42x30	SRA-45x30	SRA-51x30	SRA-57x30	SRA-63x30
36"	SRA-33x36	SRA-39x36	SRA-42x36	SRA-45x36	SRA-51x36	SRA-57x36	SRA-63x36
42"	SRA-33x42	SRA-39x42	SRA-42x42	SRA-45x42	SRA-51x42	SRA-57x42	SRA-63x42
48"	SRA-33x48	SRA-39x48	SRA-42x48	SRA-45x48	SRA-51x48	SRA-57x48	SRA-63x48

Please refer to pricing through Con-Nex, our online ordering program

Stanisci Design Range Hoods (continued)

H2 – Series Hood w/Display Shelf

- Hearth style hood featuring incorporated display shelf.
- Profile options –
  Framing Bead: Regular, Elite, Ogee, Square or F-1223.
  Panel Raise: Slant, G-Cove, RM, M-Bead or P-057.
- Display shelf depth is 8-1/8" to end of moulding.
- 42" to 54" wide hoods have two panels.
- 60" to 72" wide hoods have three panels.
- Lead-time 10 days unfinished, add 7 days for finishing.
- Removable panel is standard.
- Available in Alder, Cherry, Hard Maple, PGHM Hybrid, Quarter Sawn White Oak, Red Oak, Rift Cut White Oak, Walnut and White Oak.
- **Custom sizes available through Special Designs.**

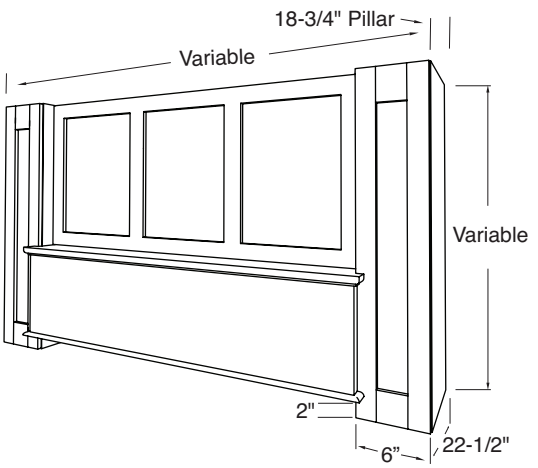

Height	H2-Series Part Number					
26"	H2-42x26	H2-48x26	H2-54x26	H2-60x26	H2-66x26	H2-72x26
32"	H2-42x32	H2-48x32	H2-54x32	H2-60x32	H2-66x32	H2-72x32
38"	H2-42x38	H2-48x38	H2-54x38	H2-60x38	H2-66x38	H2-72x38
44"	H2-42x44	H2-48x44	H2-54x44	H2-60x44	H2-66x44	H2-72x44
50"	H2-42x50	H2-48x50	H2-54x50	H2-60x50	H2-66x50	H2-72x50

SB100 – Series Hood

- Lead-time 10 days unfinished, add 7 days for finishing.
- Removable panel only.
- Available in Alder, Cherry, Hard Maple, PGHM Hybrid, Quarter Sawn White Oak, Red Oak, Rift Cut White Oak, Walnut and White Oak.
- Hoods with widths from 30" – 47-15/16" will have two panels on top. Hoods 48" and wider will have three panels on top.
- **Custom sizes available through Special Designs.**

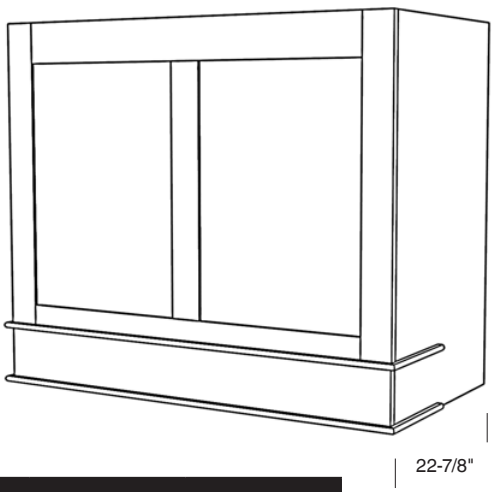

Height	SB100-Series Part Number					
24"	SB100-30x24	SB100-36x24	SB100-42x24	SB100-48x24	SB100-54x24	SB100-60x24
30"	SB100-30x30	SB100-36x30	SB100-42x30	SB100-48x30	SB100-54x30	SB100-60x30
36"	SB100-30x36	SB100-36x36	SB100-42x36	SB100-48x36	SB100-54x36	SB100-60x36
42"	SB100-30x42	SB100-36x42	SB100-42x42	SB100-48x42	SB100-54x42	SB100-60x42
48"	SB100-30x48	SB100-36x48	SB100-42x48	SB100-48x48	SB100-54x48	SB100-60x48

Please refer to pricing through Con-Nex, our online ordering program

Stanisci Design Range Hoods (continued)

ER300 – Series Hood

- ER300-Series hoods are not trimmable. Specific heights available through Special Designs.
- Lead-time 10 days unfinished, add 7 days for finishing.
- Fixed panel only.
- Moulding package not available.
- Available in Alder, Cherry, Hard Maple, PGHM Hybrid, Quarter Sawn White Oak, Red Oak, Rift Cut White Oak, Walnut and White Oak.
- **Custom sizes available through Special Designs.**

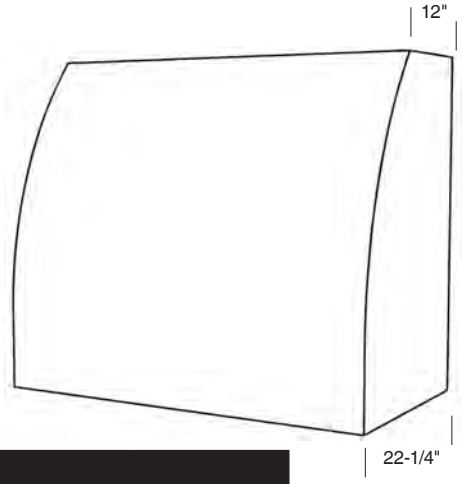

Height	ER300-Series Part Number					
36"	ER300-30x36	ER300-36x36	ER300-42x36	ER300-48x36	ER300-54x36	ER300-60x36
42"	ER300-30x42	ER300-36x42	ER300-42x42	ER300-48x42	ER300-54x42	ER300-60x42
48"	ER300-30x48	ER300-36x48	ER300-42x48	ER300-48x48	ER300-54x48	ER300-60x48
54"	ER300-30x54	ER300-36x54	ER300-42x54	ER300-48x54	ER300-54x54	ER300-60x54
60"	ER300-30x60	ER300-36x60	ER300-42x60	ER300-48x60	ER300-54x60	ER300-60x60

BHW – Series Hood

- BHW-Series is designed to fit 8 to 10 foot ceilings.
- BHW-Series hoods are not recommended to be cut down in the field – specify height at time of order.
- Lead-time 10 days unfinished, add 7 days for finishing.
- Fixed panel is standard.
- Moulding package not available.
- Available in Alder, Cherry, Hard Maple, PGHM Hybrid, Quarter Sawn White Oak, Red Oak, Rift Cut White Oak, Walnut and White Oak.
- **Custom sizes available through Special Designs.**

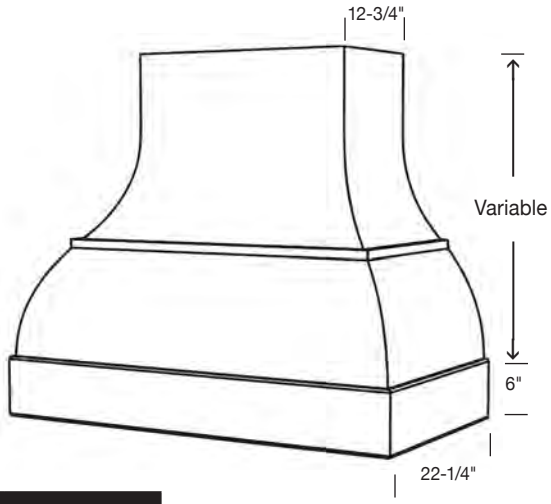

Height	BHW-Series Part Number				
30"	BHW-36x30	BHW-42x30	BHW-48x30	BHW-54x30	BHW-60x30
36"	BHW-36x36	BHW-42x36	BHW-48x36	BHW-54x36	BHW-60x36
42"	BHW-36x42	BHW-42x42	BHW-48x42	BHW-54x42	BHW-60x42
48"	BHW-36x48	BHW-42x48	BHW-48x48	BHW-54x48	BHW-60x48

Stanisci Design Range Hoods (continued)

E – Standard Hood

- E-Series can be sized to fit 8 or 9 foot ceilings.
- E-Series hoods are not trimmable. Specific heights available through Special Designs.
- Lead-time 10 days unfinished, add 7 days for finishing.
- Fixed panel standard. Removable top optional.
- Available in Alder, Cherry, Hard Maple, PGHM Hybrid, Quarter Sawn White Oak, Red Oak, Rift Cut White Oak, Walnut and White Oak.
- **Custom sizes available through Special Designs.**

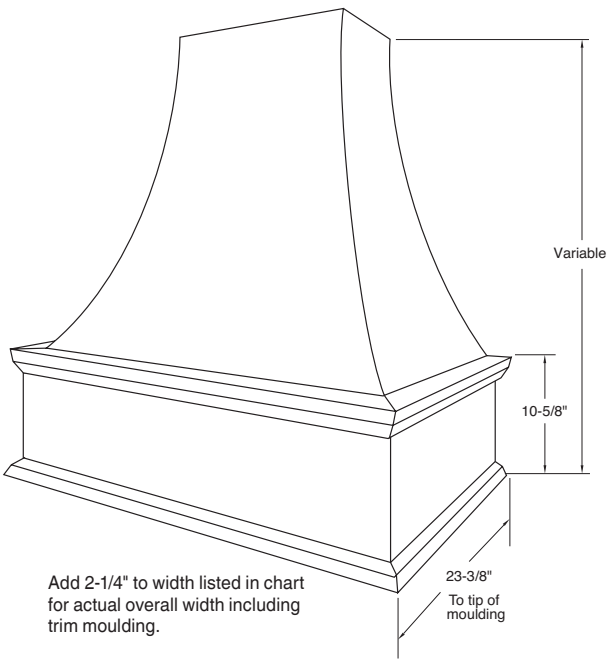

Height	E-Series Part Number				
30"	E-36x30	E-42x30	E-48x30	E-54x30	E-60x30
36"	E-36x36	E-42x36	E-48x36	E-54x36	E-60x36
42"	E-36x42	E-42x42	E-48x42	E-54x42	E-60x42
48"	E-36x48	E-42x48	E-48x48	E-54x48	E-60x48

E3 – Series Hood

- E3-Series hoods are not trimmable. Specific heights available through Special Designs.
- Lead-time 10 days unfinished, add 7 days for finishing.
- Fixed panel only.
- Moulding package not available.
- Available in Alder, Cherry, Hard Maple, PGHM Hybrid Quarter Sawn White Oak, Red Oak, Rift Cut White Oak, Walnut and White Oak.
- **Custom sizes available through Special Designs.**

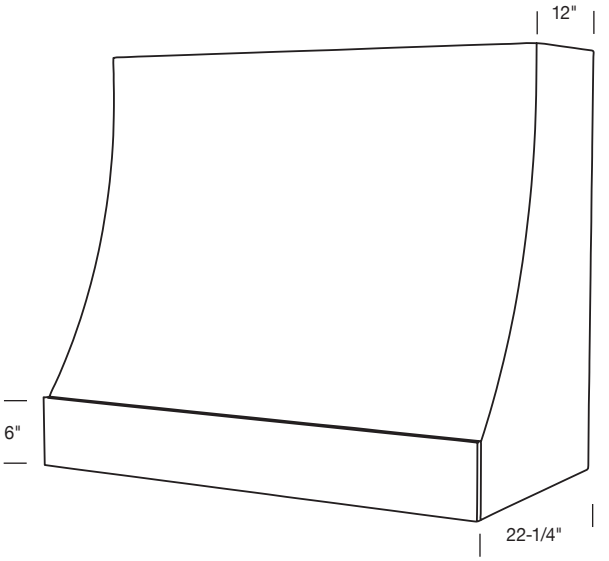

Height	E3-Series Part Number					
24"	E3-30x24	E3-36x24	E3-42x24	E3-48x24	E3-54x24	E3-60x24
30"	E3-30x30	E3-36x30	E3-42x30	E3-48x30	E3-54x30	E3-60x30
36"	E3-30x36	E3-36x36	E3-42x36	E3-48x36	E3-54x36	E3-60x36
42"	E3-30x42	E3-36x42	E3-42x42	E3-48x42	E3-54x42	E3-60x42
48"	E3-30x48	E3-36x48	E3-42x48	E3-48x48	E3-54x48	E3-60x48

Please refer to pricing through Con-Nex, our online ordering program

Stanisci Design Range Hoods (continued)

Z200 – Series Hood

- Z200-Series is a transitional hood designed to be mounted to the wall and adjacent cabinets.
- Lead-time 10 days unfinished, add 7 days for finishing.
- Fixed panel standard. Removable front optional (rear box increases to 16").
- Available with Basic Moulding Package only.
- Available in Alder, Cherry, Hard Maple, PGHM Hybrid, Quarter Sawn White Oak, Red Oak, Rift Cut White Oak, Walnut and White Oak.
- **Custom sizes available through Special Designs.**

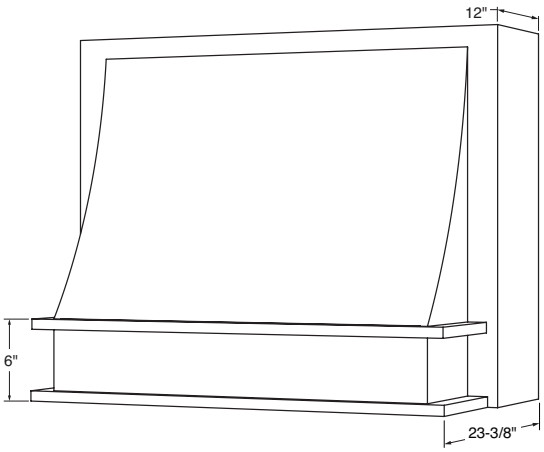

Height	Z200-Series Part Number						
30"	Z200-33x30	Z200-36x30	Z200-39x30	Z200-45x30	Z200-51x30	Z200-57x30	Z200-63x30
36"	Z200-33x36	Z200-36x36	Z200-39x36	Z200-45x36	Z200-51x36	Z200-57x36	Z200-63x36
42"	Z200-33x42	Z200-36x42	Z200-39x42	Z200-45x42	Z200-51x42	Z200-57x42	Z200-63x42
48"	Z200-33x48	Z200-36x48	Z200-39x48	Z200-45x48	Z200-51x48	Z200-57x48	Z200-63x48

P – Series Hood

- P-Series is designed to be mounted to the wall and adjacent cabinets.
- Lead-time 10 days unfinished, add 7 days for finishing.
- Fixed panel standard. Removable front optional (rear box increases to 16").
- Available with Basic Moulding Package only.
- Available in Alder, Cherry, Hard Maple, PGHM Hybrid, Quarter Sawn White Oak, Red Oak, Rift Cut White Oak, Walnut and White Oak.
- **Custom sizes available through Special Designs.**

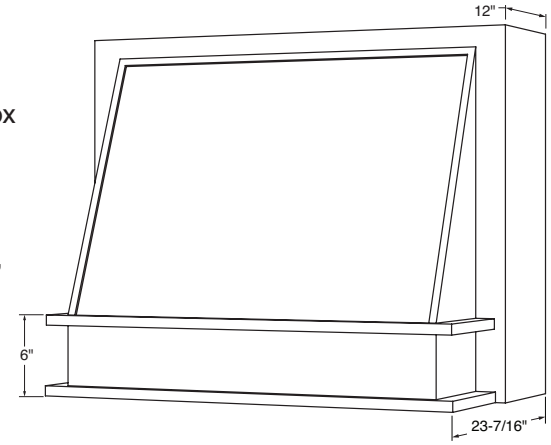

Height	P-Series Part Number							
24"	P-33x24	P-36x24	P-39x24	P-42x24	P-45x24	P-51x24	P-57x24	P-63x24
30"	P-33x30	P-36x30	P-39x30	P-42x30	P-45x30	P-51x30	P-57x30	P-63x30
36"	P-33x36	P-36x36	P-39x36	P-42x36	P-45x36	P-51x36	P-57x36	P-63x36
42"	P-33x42	P-36x42	P-39x42	P-42x42	P-45x42	P-51x42	P-57x42	P-63x42
48"	P-33x48	P-36x48	P-39x48	P-42x48	P-45x48	P-51x48	P-57x48	P-63x48

Please refer to pricing through Con-Nex, our online ordering program

Stanisci Design Range Hoods (continued)

FX – Series Hood

- FX–Series complements both contemporary and transitional styles and is designed to be either mounted as stand-alone or between cabinets.
- Not recommended to be cut down in the field – specify height at time of order.
- Lead-time 10 days unfinished, add 7 days for finishing.
- Fixed panel only.
- Moulding package not available.
- Available in Alder, Cherry, Hard Maple, PGHM Hybrid, Quarter Sawn White Oak, Red Oak, Rift Cut White Oak, Walnut and White Oak.
- **Custom sizes available through Special Designs.**

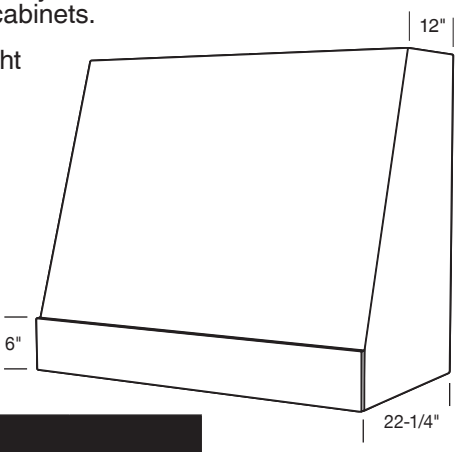

Height	FX-Series Part Number					
24"	FX-30x24	FX-36x24	FX-42x24	FX-48x24	FX-54x24	FX-60x24
30"	FX-30x30	FX-36x30	FX-42x30	FX-48x30	FX-54x30	FX-60x30
36"	FX-30x36	FX-36x36	FX-42x36	FX-48x36	FX-54x36	FX-60x36
42"	FX-30x42	FX-36x42	FX-42x42	FX-48x42	FX-54x42	FX-60x42
48"	FX-30x48	FX-36x48	FX-42x48	FX-48x48	FX-54x48	FX-60x48

FXBPUP – Series Hood

- FXBPUP–Series is a transitional hood designed to be either mounted as stand-alone or between cabinets.
- Profile options –
  Framing Bead: Regular, Elite, Ogee, Square or F-1223.
  Panel Raise: Slant, G-Cove, RM, M-Bead or P-057.
- Not recommended to be cut down in the field – specify height at time of order.
- Lead-time 10 days unfinished, add 7 days for finishing.
- Removable panel only.
- Hoods with widths from 30"-48" will have two panels on top and two panels on the bottom. Hoods over 48" will have three panels on top and three panels on the bottom.
- Standard hood apron height is 6" with recessed center panel only.
- Available in Alder, Cherry, Hard Maple, PGHM Hybrid, Quarter Sawn White Oak, Red Oak, Rift Cut White Oak, Walnut and White Oak.
- **Custom sizes and panel configurations available through Special Designs.**

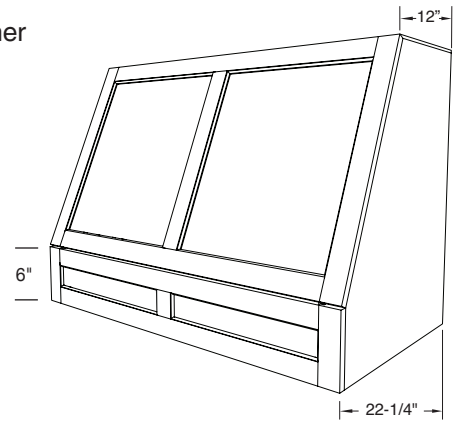

Height	FXBPUP-Series Part Number					
24"	FXBPUP-30x24	FXBPUP-36x24	FXBPUP-42x24	FXBPUP-48x24	FXBPUP-54x24	FXBPUP-60x24
30"	FXBPUP-30x30	FXBPUP-36x30	FXBPUP-42x30	FXBPUP-48x30	FXBPUP-54x30	FXBPUP-60x30
36"	FXBPUP-30x36	FXBPUP-36x36	FXBPUP-42x36	FXBPUP-48x36	FXBPUP-54x36	FXBPUP-60x36
42"	FXBPUP-30x42	FXBPUP-36x42	FXBPUP-42x42	FXBPUP-48x42	FXBPUP-54x42	FXBPUP-60x42
48"	FXBPUP-30x48	FXBPUP-36x48	FXBPUP-42x48	FXBPUP-48x48	FXBPUP-54x48	FXBPUP-60x48

Please refer to pricing through Con-Nex, our online ordering program

Stanisci Design Range Hoods (continued)

K300– Series Hood

- K300–Series complements both contemporary and transitional styles and is designed to be either mounted as stand-alone or between cabinets.
- Not recommended to be cut down in the field – specify height at time of order.
- Range Hoods over 48" in width have horizontal grain.
- Lead-time 10 days unfinished, add 7 days for finishing.
- Fixed panel only.
- Moulding package not available.
- Available in Alder, Cherry, Hard Maple, PGHM Hybrid, Quarter Sawn White Oak, Red Oak, Rift Cut White Oak, Walnut and White Oak.
- **Custom sizes available through Special Designs.**

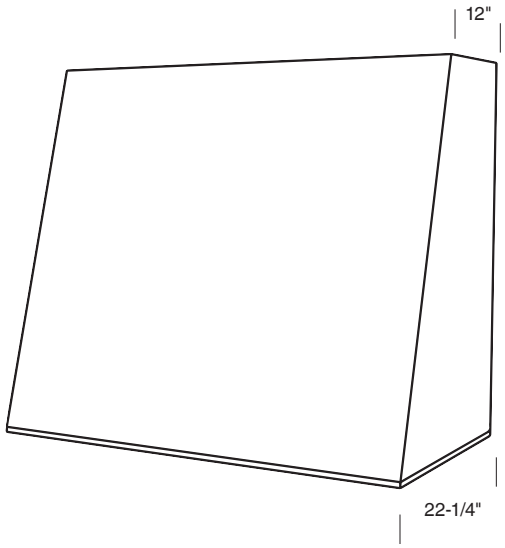

Height	K300-Series Part Number					
30"	K300-30x30	K300-36x30	K300-42x30	K300-48x30	K300-54x30	K300-60x30
36"	K300-30x36	K300-36x36	K300-42x36	K300-48x36	K300-54x36	K300-60x36
42"	K300-30x42	K300-36x42	K300-42x42	K300-48x42	K300-54x42	K300-60x42
48"	K300-30x48	K300-36x48	K300-42x48	K300-48x48	K300-54x48	K300-60x48
54"	K300-30x54	K300-36x54	K300-42x54	K300-48x54	K300-54x54	K300-60x54
60"	K300-30x60	K300-36x60	K300-42x60	K300-48x60	K300-54x60	K300-60x60

Please refer to pricing through Con-Nex, our online ordering program

Stanisci Design Range Hoods (continued)

FX2HW – Series Hood

- Not recommended to be cut down in the field – specify height at time of order.
- Lead-time 10 days unfinished, add 7 days for finishing.
- Fixed panel standard. Removable top optional.
- Moulding package not available.
- Available in Alder, Cherry, Hard Maple, PGHM Hybrid, Quarter Sawn White Oak, Red Oak, Rift Cut White Oak, Walnut and White Oak.
- **Custom sizes available through Special Designs.**

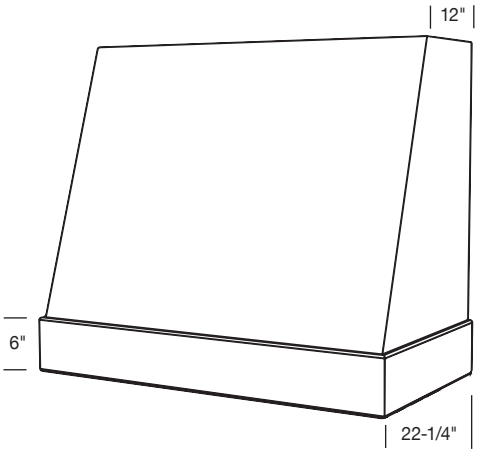

Height	FX2HW - Series Part Number					
24"	FX2HW-30x24	FX2HW-36x24	FX2HW-42x24	FX2HW-48x24	FX2HW-54x24	FX2HW-60x24
30"	FX2HW-30x30	FX2HW-36x30	FX2HW-42x30	FX2HW-48x30	FX2HW-54x30	FX2HW-60x30
36"	FX2HW-30x36	FX2HW-36x36	FX2HW-42x36	FX2HW-48x36	FX2HW-54x36	FX2HW-60x36
42"	FX2HW-30x42	FX2HW-36x42	FX2HW-42x42	FX2HW-48x42	FX2HW-54x42	FX2HW-60x42
48"	FX2HW-30x48	FX2HW-36x48	FX2HW-42x48	FX2HW-48x48	FX2HW-54x48	FX2HW-60x48

FX2PL – Series Hood

- Not recommended to be cut down in the field – specify height at time of order.
- Lead-time 10 days unfinished, add 7 days for finishing.
- Fixed panel standard. Removable top optional.
- Available in Alder, Cherry, Hard Maple, PGHM Hybrid, Quarter Sawn White Oak, Red Oak, Rift Cut White Oak, Walnut and White Oak.
- **Custom sizes available through Special Designs.**

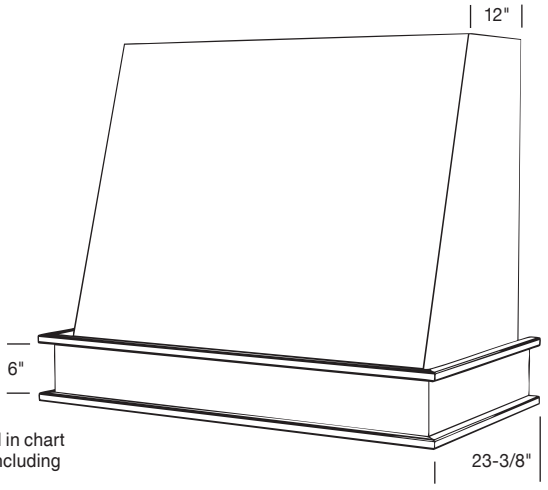

Add 2-1/4" to width listed in chart for actual overall width including trim moulding.

Height	FX2PL - Series Part Number					
24"	FX2PL-30x24	FX2PL-36x24	FX2PL-42x24	FX2PL-48x24	FX2PL-54x24	FX2PL-60x24
30"	FX2PL-30x30	FX2PL-36x30	FX2PL-42x30	FX2PL-48x30	FX2PL-54x30	FX2PL-60x30
36"	FX2PL-30x36	FX2PL-36x36	FX2PL-42x36	FX2PL-48x36	FX2PL-54x36	FX2PL-60x36
42"	FX2PL-30x42	FX2PL-36x42	FX2PL-42x42	FX2PL-48x42	FX2PL-54x42	FX2PL-60x42
48"	FX2PL-30x48	FX2PL-36x48	FX2PL-42x48	FX2PL-48x48	FX2PL-54x48	FX2PL-60x48

Please refer to pricing through Con-Nex, our online ordering program

Decorative Elements and Accents

Conestoga has partnered with some of the leading industry providers of decorative woodcarvings to bring you this inclusive collection. Conestoga's accessory offering includes a wide variety of corbels, legs, columns, corner posts, and other decorative elements. Items ordered from this collection will be consolidated with the rest of your Conestoga products and ship as a complete order. Because of transportation time required from some suppliers, additional lead-time may be necessary.

- Specie availability varies by product and is indicated by the specie part number listed with each product drawing. Pricing for all items can be found on the Customer Business Portal.
- Because of the various manufacturing and sanding techniques used to produce these decorative products, slight variations in finished appearance may occur. These variations will not be considered defective.
- Due to the size and complexity of design, many of these products utilize edge glued lumber. This may result in grain pattern, wood color and finish variations.
- In addition to the wood carvings and turnings shown on the following pages, Conestoga has established a comprehensive program with Art For Everyday. Known for their exquisite carving capabilities, Art for Everyday is a leader in carved components and provides Conestoga access to thousands of carved items. Complete images and price lists can be found on the Customer Business Portal, under the Marketing Resources tab. All Art For Everyday products can receive any of Conestoga's standard finishes.

Finishing

Conestoga offers finishing on all decorative elements and accents. This allows you to simplify your shop process and purchase accessories along with your finished door order. See the Finishing Program Section for available stain, Colourtone, primer, Prism Paint and glaze combinations.

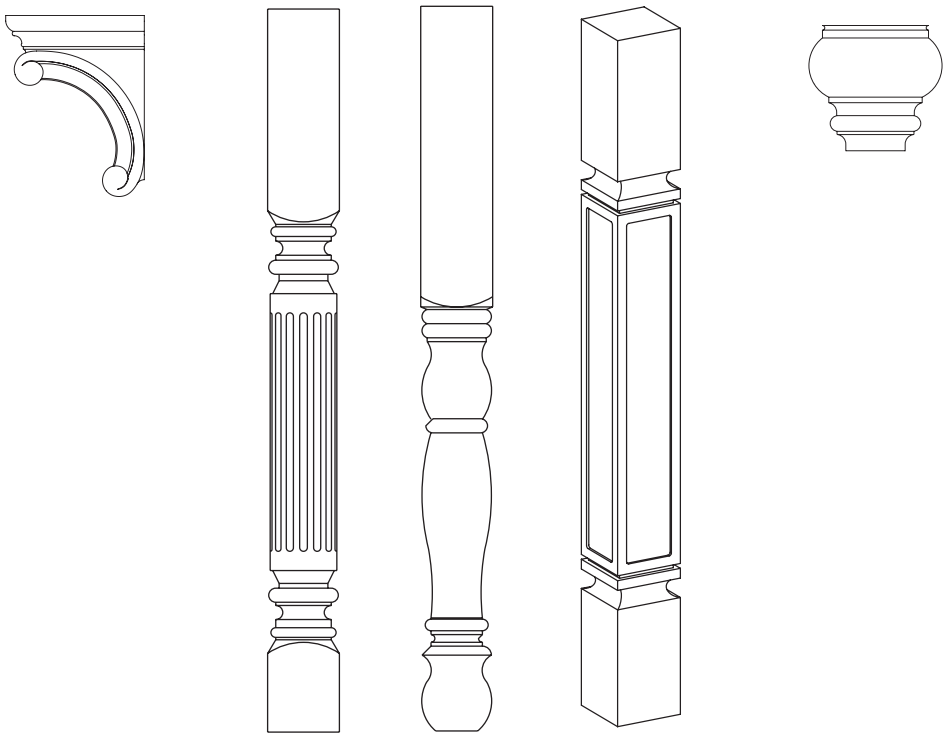

Decorative Turning Program

Conestoga's turning offering features a large collection of columns, table legs, island posts and feet. The offering consists of standard products shown on the following pages, as well as the capability to produce a variety of custom turnings. These items may include stair and furniture parts, tall columns and non-standard species.

Standard Offering

- Conestoga's standard offering of table legs, island posts and feet is typically available in the industry's most popular species. Depending on the item, Paint Grade will be an unselected closed-grain hardwood.
- The majority of table legs and island posts are available in three options - whole, split and 3/4. This allows for consistency within the design of the kitchen or bath while also providing flexibility in the manner in which the legs are used.
- Whole and 3/4 items can be ordered individually, while splits must be ordered in pairs.
- Lead-times for table legs, island posts and feet are 7-10 days. Some items can be expedited; refer to footnotes at the bottom of each page for expedite availability.
- Parts must be ordered by part number according to specie and whole, split or 3/4.

Table Legs and Decorative Columns

Mission Plain

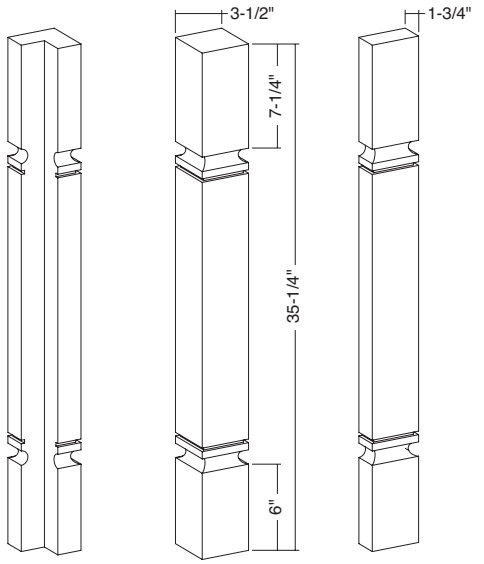

Specie	Whole	Split**	3/4
Cherry	2652562A	2652566A	2652570A
Maple	2652563A	2652567A	2652571A
Paint Grade	2652564A	2652568A	2652572A
Red Oak	2652565A	2652569A	2652573A

Mission Full Rout

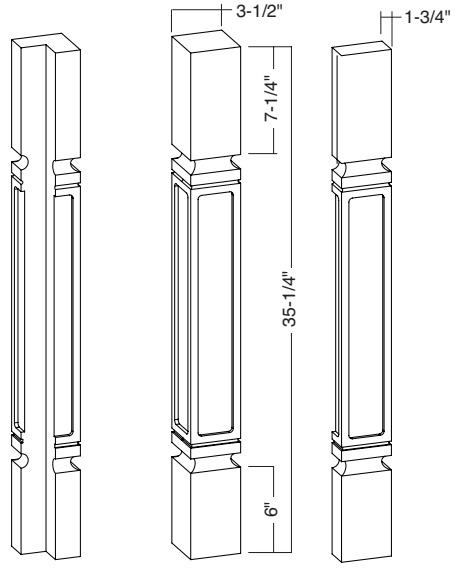

Specie	Whole	Split**	3/4
Cherry	2652526A	2652530A	2652534A
Maple	2652527A	2652531A	2652535A
Paint Grade	2652528A	2652532A	2652536A
Red Oak	2652529A	2652533A	2652537A

Arts & Crafts Post

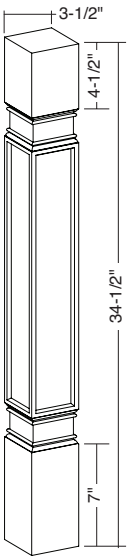

Specie	Whole
Cherry	635.74.620
Maple	635.74.120
Red Oak	635.74.420

Please refer to pricing through Con-Nex, our online ordering program

**Must purchase in pairs.

Standard lead-time is 7-10 days, expedites not available.

Table Legs and Decorative Columns (continued)

Ashbee Square SM

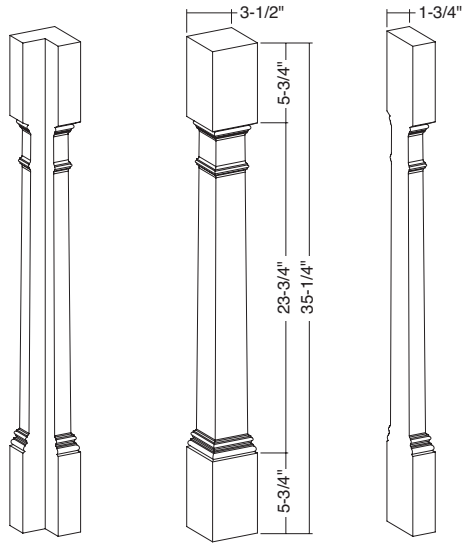

Also available in a 42" height.

Specie	Whole	Split**	3/4
Alder	2651295A	2651299A	2651303A
Cherry	2651293A	2651297A	2651301A
Maple	2651294A	2651298A	2651302A
Red Oak	2651292A	2651296A	2651300A

Ashbee Square LG

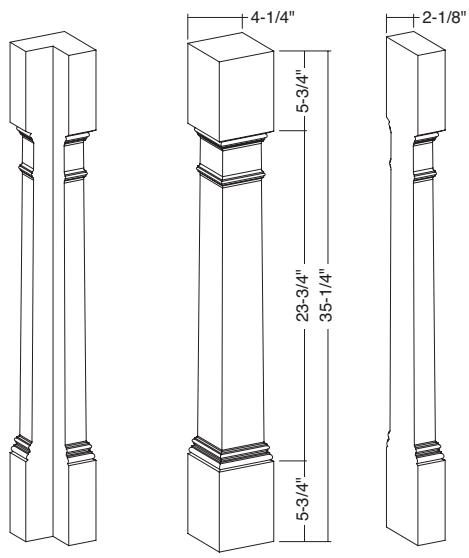

Also available in a 42" height.

Specie	Whole	Split**	3/4
Alder	2651319A	2651323A	2651327A
Cherry	2651317A	2651321A	2651325A
Maple	2651318A	2651322A	2651326A
Red Oak	2651316A	2651320A	2651324A

Townsend Square

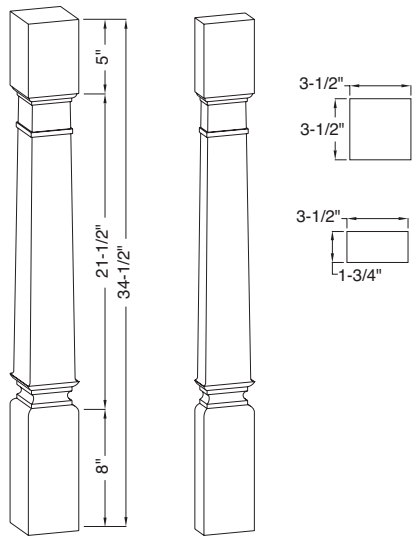

Specie	Whole	Split**
Alder	2655816A	2655817A
Cherry	2655818A	2655819A
Maple	2655820A	2655821A
Red Oak	2655814A	2655815A

Hudson Post

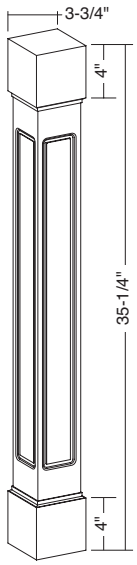

Specie	Whole
Alder	2655577A
Cherry	2655578A
Maple	2655579A
Paint Grade	2655580A
Red Oak	2655581A

Please refer to pricing through Con-Nex, our online ordering program

**Must purchase in pairs.

Standard lead-time is 7-10 days, expedites not available.

Table Legs and Decorative Columns (continued)

Hillsboro Square SM

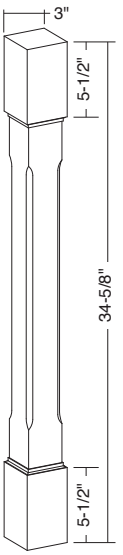

Specie	Whole
Alder	2655582A
Cherry	2655583A
Maple	2655584A
Paint Grade	2655585A
Red Oak	2655586A

Hillsboro Square LG

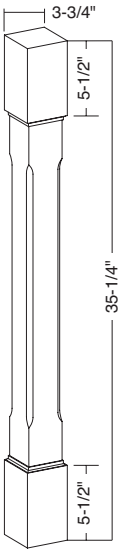

Specie	Whole
Alder	2655587A
Cherry	2655588A
Maple	2655589A
Paint Grade	2655590A
Red Oak	2655591A

Pinnacle

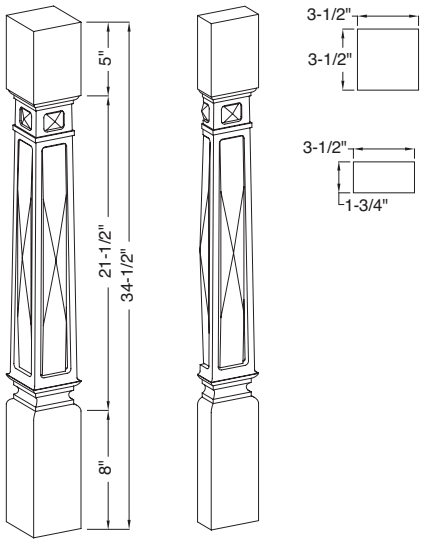

Specie	Whole	Split**
Alder	2655836A	2655837A
Cherry	2655838A	2655839A
Maple	2655840A	2655841A
Red Oak	2655834A	2655835A

2 Sided Taper

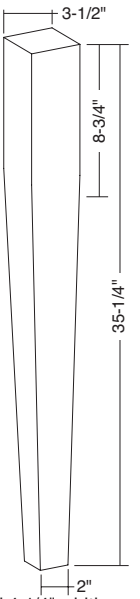

Also available in 2-3/4" and 4-1/4" widths as well as 42" height.

Specie	Whole
Alder	2651363A
Cherry	2651361A
Maple	2651362A
Paint Grade	2655780A
Red Oak	2651360A

Please refer to pricing through Con-Nex, our online ordering program

**Must purchase in pairs.
Standard lead-time is 7-10 days, expedites not available.

Table Legs and Decorative Columns (continued)

Dunkirk Square MED

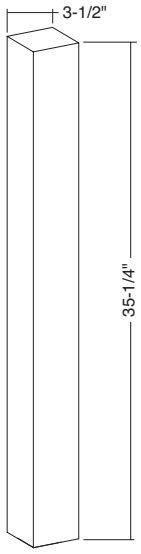

Available as whole only.
Also available in a 42" height as well as 2" and 5" widths.

Specie	Whole	Specie	Whole
Alder	2652428A	Red Oak	2652432A
Cherry	2652429A	Walnut	2653142A
Hickory	2653144A	White Oak	2653143A
Maple	2652430A		
Paint Grade	2652431A		

Dunkirk Square LG

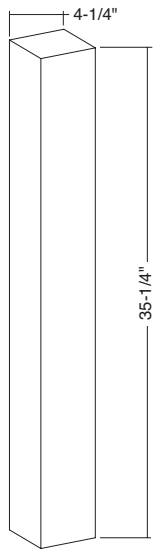

Available as whole only.
Also available in a 42" height as well as 2" and 5" widths.

Specie	Whole	Specie	Whole
Alder	2652438A	Red Oak	2652442A
Cherry	2652439A	Walnut	2653148A
Hickory	2653150A	White Oak	2653149A
Maple	2652440A		
Paint Grade	2652441A		

Denmark Square w/Metal Sleeve

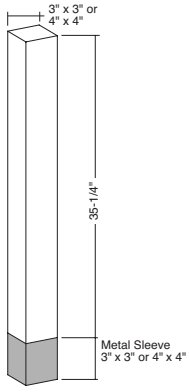

Note: Metal sleeve and leg sold together, cannot be ordered separately.

Available as whole only.

Size	Specie	Brushed Aluminum Whole	Flat Black Whole	Satin Brass Whole	Titanium Whole
3"	Alder	2655956A	2655957A	2656181A	2656182A
	Cherry	2655958A	2655959A	2656183A	2656184A
	Maple	2655960A	2655961A	2656185A	2656186A
	Red Oak	2655962A	2655963A	2656187A	2656188A
	White Oak	2656173A	2656174A	2656175A	2656176A
	Walnut	2656118A	2656119A	2656169A	2656170A
4"	Alder	2655964A	2655965A	2656189A	2656190A
	Cherry	2655966A	2655967A	2656191A	2656192A
	Maple	2655968A	2655969A	2656193A	656194A
	Red Oak	2655970A	2655971A	2656195A	2656196A
	White Oak	2656177A	2656178A	2656179A	2656180A
	Walnut	2656120A	2656121A	2656171A	2656172A

Please refer to pricing through Con-Nex, our online ordering program

Table Legs and Decorative Columns (continued)

Bexley Square

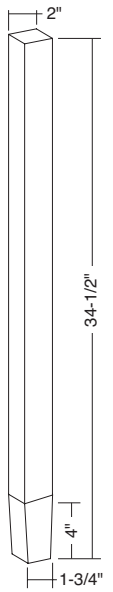

Tapered on 2 sides.

Available as whole only.

Specie	Whole
Cherry	635.50.688
Maple	635.50.188
Red Oak	635.50.488

Please refer to pricing through Con-Nex, our online ordering program

Table Legs and Decorative Columns (continued)

Lakeland Square

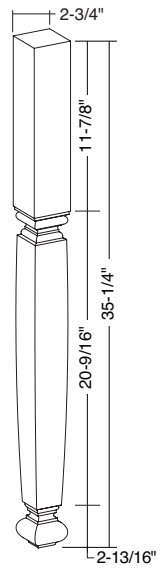

Specie	Whole
Alder	2655592A
Cherry	2655593A
Maple	2655594A
Paint Grade	2655595A
Red Oak	2655596A

Newburg Square

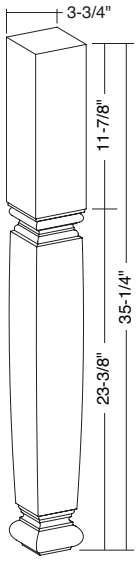

Specie	Whole
Alder	2655597A
Cherry	2655598A
Maple	2655599A
Paint Grade	2655600A
Red Oak	2655601A

Woodmere

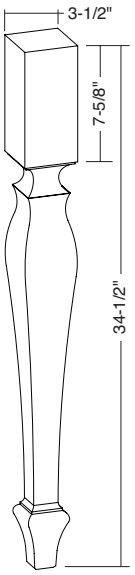

Specie	Whole
Cherry	635.75.004
Maple	635.75.024

Please refer to pricing through Con-Nex, our online ordering program

Table Legs and Decorative Columns (continued)

Century Plain MED

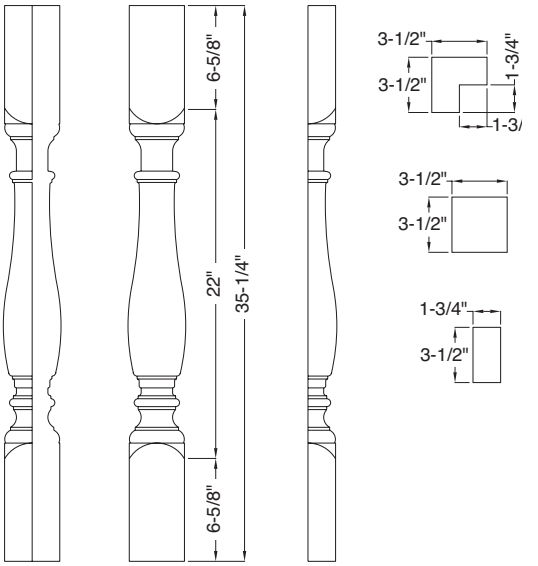

Specie	Whole	Split**	3/4
Cherry	2650461A	2650464A	2650467A
Maple	2650462A	2650465A	2650468A
Paint Grade	2655732A	2655733A	2655734A
Red Oak	2650463A	2650466A	2650469A

Century Plain LG

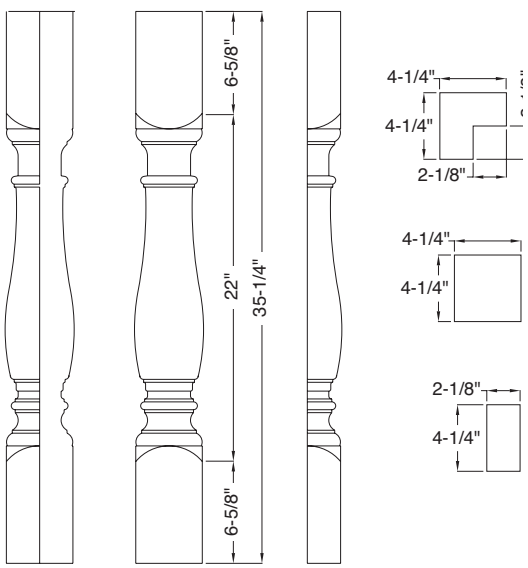

Specie	Whole	Split**	3/4
Cherry	2650470A	2650473A	2650476A
Maple	2650471A	2650474A	2650477A
Paint Grade	2655523A	2655524A	2655525A
Red Oak	2650472A	2650475A	2650478A

Century Plain XL

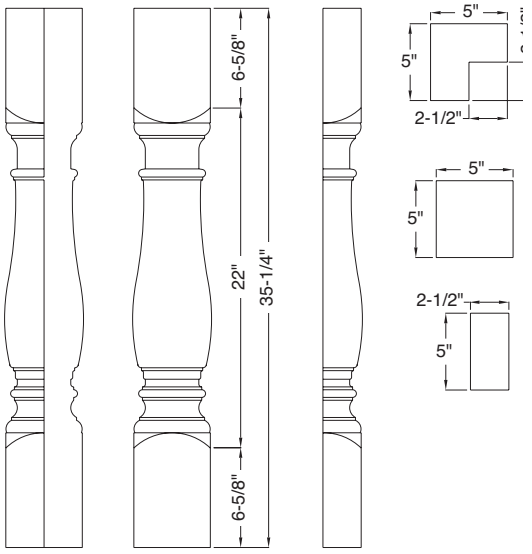

Specie	Whole	Split**	3/4
Cherry	2650850A	2650854A	2650858A
Maple	2650851A	2650855A	2650859A
Paint Grade	2655757A	2655758A	2655759A
Red Oak	2650852A	2650856A	2650860A

Philmont

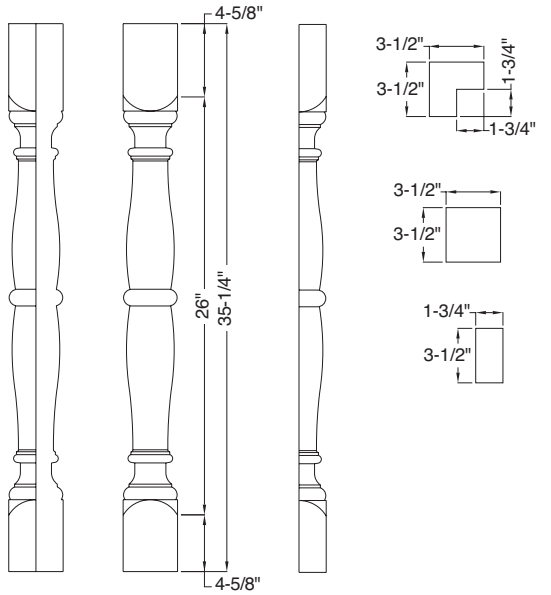

Specie	Whole	Split**	3/4
Alder	2650801A	2650805A	2650809A
Cherry	2650802A	2650806A	2650810A
Maple	2650803A	2650807A	2650811A
Paint Grade	2655556A	2655557A	2655558A
Red Oak	2650804A	2650808A	2650812A

Please refer to pricing through Con-Nex, our online ordering program

**Must purchase in pairs.

Standard lead-time is 7-10 days, expedites not available.

Table Legs and Decorative Columns (continued)

Country Kitchen Plain

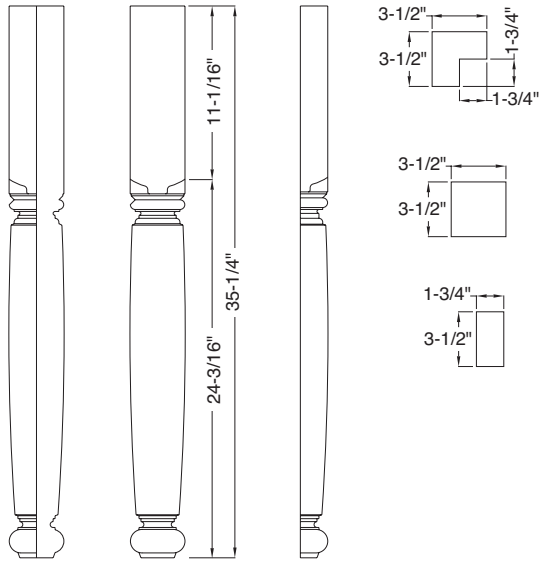

Specie	Whole	Split**	3/4
Alder	2650728A	2650729A	2650730A
Cherry	2650443A	2650446A	2650449A
Maple	2650444A	2650447A	2650450A
Paint Grade	2655520A	2655521A	2655522A
Red Oak	2650445A	2650448A	2650451A

Greco Roman Plain

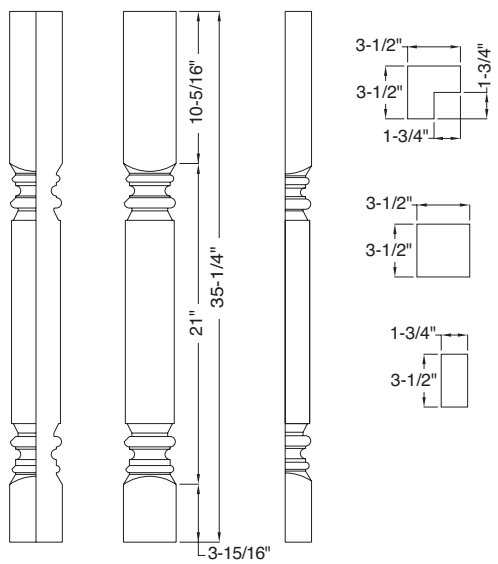

Also available in a 42" height.

Specie	Whole	Split**	3/4
Cherry	2650236A	2650239A	2650242A
Maple	2650237A	2650240A	2650243A
Paint Grade	2655721A	2655722A	2655723A
Red Oak	2650238A	2650241A	2650244A

Greco Roman Fluted MED

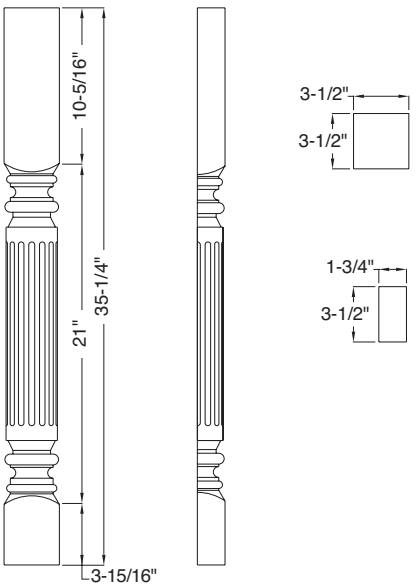

Specie	Whole	Split**
Cherry	2650272A	2650275A
Maple	2650273A	2650276A
Paint Grade	2655727A	2655728A
Red Oak	2650274A	2650277A

Greco Roman Fluted LG

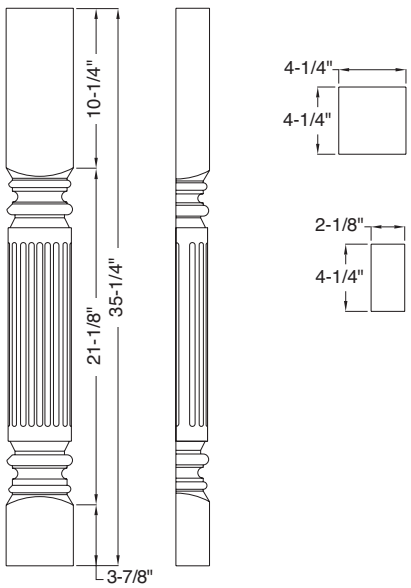

Specie	Whole	Split**
Cherry	2650284A	2650287A
Maple	2650285A	2650288A
Paint Grade	2655499A	2655495A
Red Oak	2650286A	2650289A

Please refer to pricing through Con-Nex, our online ordering program

**Must purchase in pairs.

Standard lead-time is 7-10 days, expedites not available.

Table Legs and Decorative Columns (continued)

Waverly

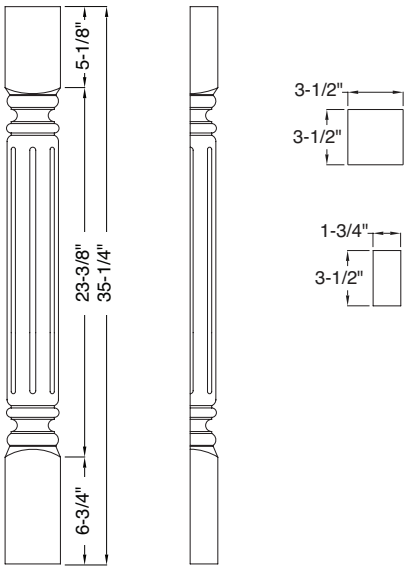

Specie	Whole	Split**
Alder	2651228A	2651232A
Cherry	2651226A	2651230A
Maple	2651225A	2651229A
Paint Grade	2655775A	2655776A
Red Oak	2651227A	2651231A

Basket Weave

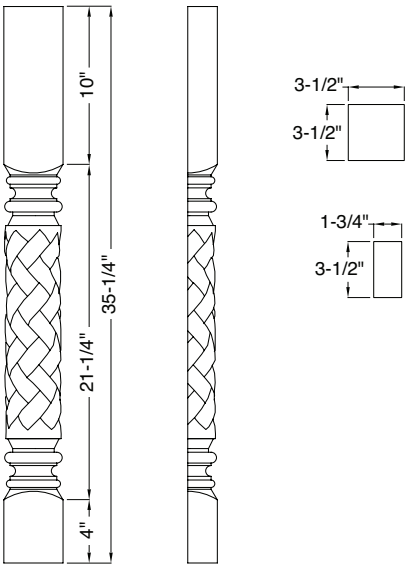

Specie	Whole	Split**
Alder	N/A	N/A
Cherry	2651005A	2651008A
Maple	2651006A	2651009A
Paint Grade	2655559A	2655560A
Red Oak	2651007A	2651010A

Athens

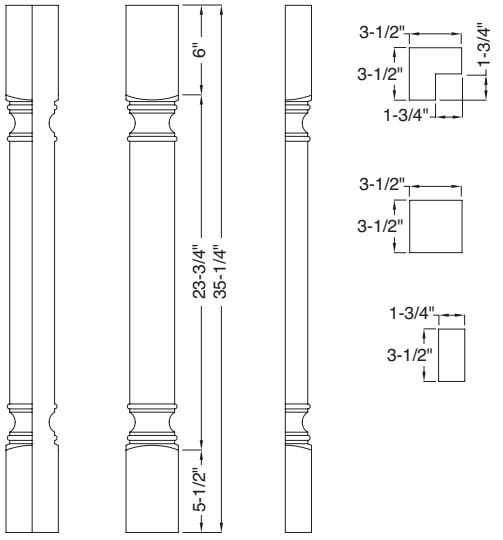

Also available in 4 1/4" width.

Specie	Whole	Split**	3/4
Alder	2651268A	2651272A	2651276A
Cherry	2651266A	2651270A	2651274A
Maple	2651265A	2651269A	2651273A
Paint Grade	2655537A	2655538A	2655539A
Red Oak	2651267A	2651271A	2651275A

Federal Post

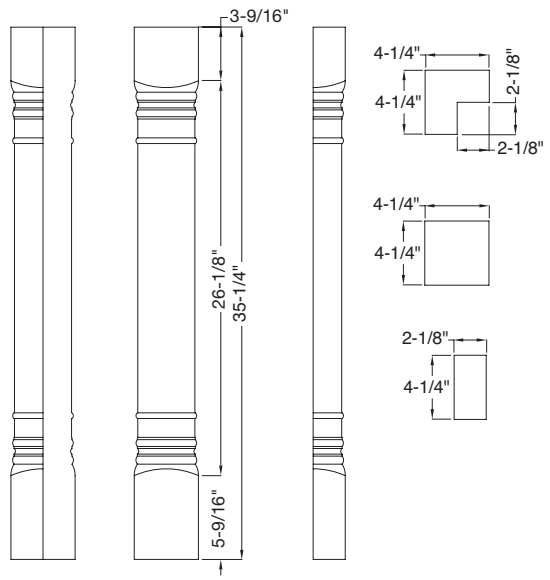

Specie	Whole	Split**	3/4
Alder	2651100A	2651104A	2651108A
Cherry	2651101A	2651105A	2651109A
Maple	2651102A	2651106A	2651110A
Paint Grade	2655768A	2655769A	2655770A
Red Oak	2651103A	2651107A	2651111A

Please refer to pricing through Con-Nex, our online ordering program

**Must purchase in pairs.

Standard lead-time is 7-10 days, expedites not available.

Receptacle Notching

- Receptacle notching is a custom millwork option developed to allow electrical service installations on island post applications.
- Receptacle notching is available on select table legs/posts only and is not available on feet, corbels, appliqués or other ornaments.
- Available only with whole legs – splits and 3/4 options are not available.
- Receptacle box and wiring is not included. Check your building codes for proper box and wiring codes.
- Holes for the wiring will be drilled in only one of the four locations – left, right, top or back. You must specify the hole location for wiring. We do not drill through the entire length of the table leg/post.
- If choosing 3-1/2" wide table legs, please be aware that some outlet covers may extend beyond the column width. This is due to +/- tolerances of both the table leg and the outlet cover.
- The dimensions of the rout are 2.375" wide, 2.875" deep and 4.125" high.
- For a beginning point of reference for machining the notch, you must indicate the height from the top of the leg to the start of the rout (see drawing on following page).
- Receptacle covers are available through Conestoga's Wood Outlet Cover program, or through many home centers.
- Customization of receptacle notch not available.
- Lead-time of 5 additional days is required for this option.



Duplex receptacle solid wood outlet plate

- See page 12.16 for a listing of available species. Overall dimensions are 3-1/2" wide by 5-3/4" high.
- Table legs/posts available with solid wood outlet plates: 2 Sided Taper, Basket Weave, Century Plain, Greco Roman Fluted, Greco Roman Plain, Mission Full Rout, Mission Partial Rout, Mission Plain, Newburg Square and Waverly.

Duplex receptacle nylon outlet plate

- Available from most home centers or hardware stores. Overall dimensions are typically 3-1/8" wide by 4-3/4" high.
- Table legs/posts available with nylon outlet plates: 2 Sided Taper, Ashbee Square, Basket Weave, Century Plain, Greco Roman Fluted, Greco Roman Plain, Mission Full Rout, Mission Partial Rout, Mission Plain, Newburg Square and Waverly.

Please refer to pricing through Con-Nex, our online ordering program

Receptacle Notching Order Form	
Customer Name:	**Order Date:**
Customer#:	**PO#:**
Leg/Post Part #:	**Leg/Post Description:**
Specie:	**Quantity:**
Hole location for wiring: ☐ Left ☐ Back ☐ Top ☐ Right	**Height from top to rout (see diagram below):**
Finish (if applicable): _____ **Glaze:** _____	**Sheen:** ☐ 10° ☐ 30°
Special Instructions:	

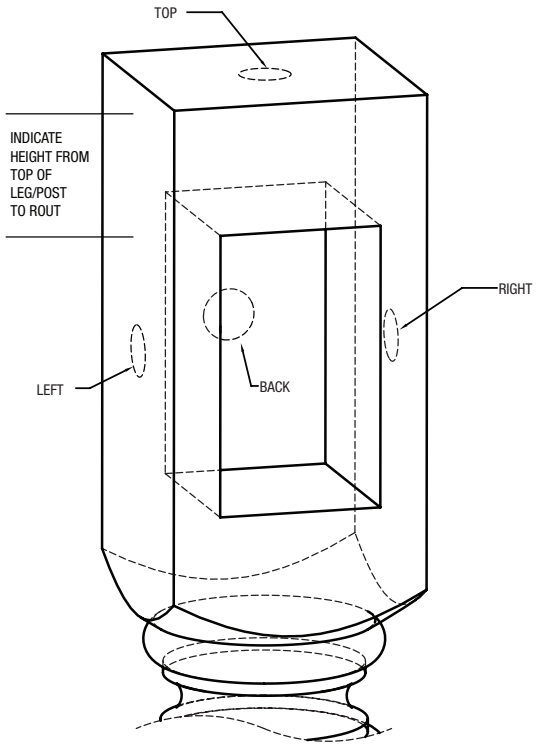

CONESTOGA™ WOOD SPECIALTIES

Outlet and Switch Plates

Single Duplex Outlet Plate

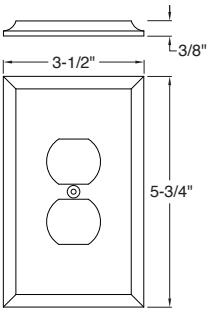

Specie	Part No.
Alder	2655701A
Cherry	2655702A*
Maple	2655703A*
Red Oak	2655704A
Walnut	2656065A
White Oak	2656197A

Double Duplex Outlet Plate

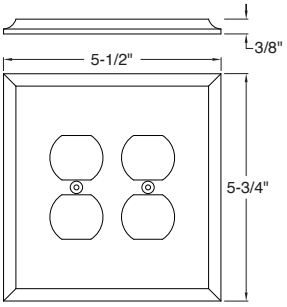

Specie	Part No.
Alder	2655713A
Cherry	2655714A
Maple	2655715A
Red Oak	2655716A
Walnut	2656068A
White Oak	2656198A

Single Toggle Switch Plate

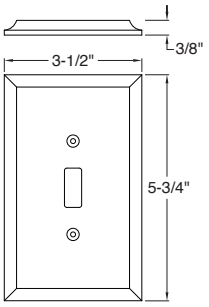

Specie	Part No.
Alder	2655697A
Cherry	2655698A
Maple	2655699A
Red Oak	2655700A
Walnut	2656064A
White Oak	2656199A

Double Toggle Switch Plate

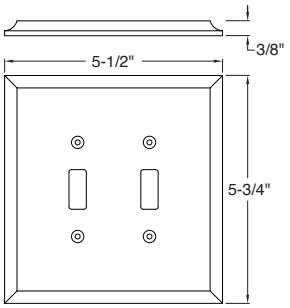

Specie	Part No.
Alder	2655709A
Cherry	2655710A
Maple	2655711A
Red Oak	2655712A
Walnut	2656067A
White Oak	2656200A

Single Decorator Switch Plate

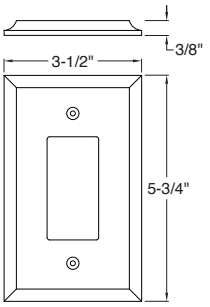

Specie	Part No.
Alder	2655705A
Cherry	2655706A*
Maple	2655707A*
Red Oak	2655708A
Walnut	2656066A
White Oak	2656201A

Double Decorator Switch Plate

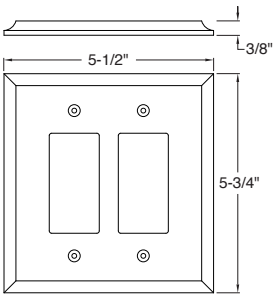

Specie	Part No.
Alder	2655717A
Cherry	2655718A
Maple	2655719A
Red Oak	2655720A
Walnut	2656069A
White Oak	2656202A

Triple Toggle Switch Plate

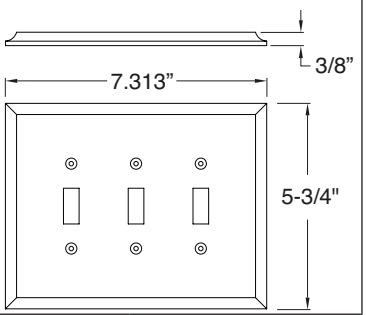

Specie	Part No.
Alder	2656070A
Cherry	2656071A
Maple	2656072A
Red Oak	2656073A
Walnut	2656074A
White Oak	2656203A

Triple Decorator Switch Plate

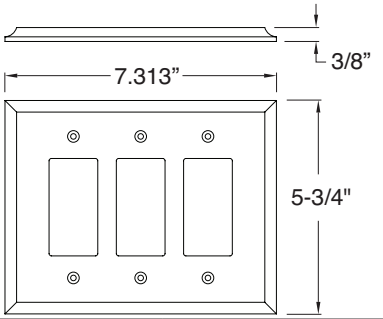

Specie	Part No.
Alder	2656075A
Cherry	2656076A
Maple	2656077A
Red Oak	2656078A
Walnut	2656079A
White Oak	2656204A

Quadruple Toggle Switch Plate

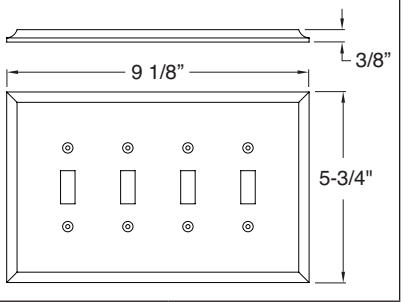

Specie	Part No.
Alder	2656080A
Cherry	2656081A
Maple	2656082A
Red Oak	2656083A
Walnut	2656084A
White Oak	2656205A

Please refer to pricing through Con-Nex, our online ordering program

Standard lead-time is 7-10 days.

* Expedites available: 3 day red expedite (20% upcharge), blue expedite not available.

Outlet and Switch Plates (continued)

Quadruple Decorator Switch Plate

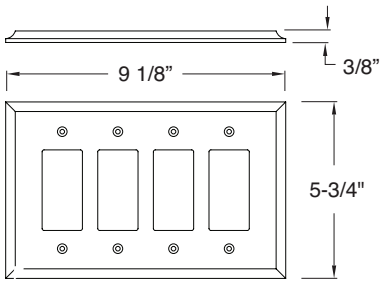

Specie	Part No.
Alder	2656085A
Cherry	2656086A
Maple	2656087A
Red Oak	2656088A
Walnut	2656089A
White Oak	2656206A

Single Toggle/Single Duplex Switch/Outlet Plate

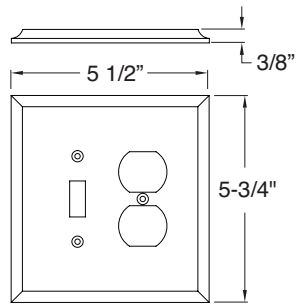

Specie	Part No.
Alder	2656090A
Cherry	2656091A
Maple	2656092A
Red Oak	2656093A
Walnut	2656094A
White Oak	2656207A

Double Toggle/Single Duplex Switch/Outlet Plate

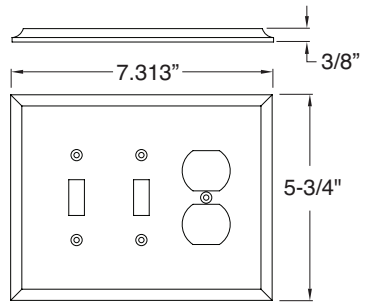

Specie	Part No.
Alder	2656095A
Cherry	2656096A
Maple	2656097A
Red Oak	2656098A
Walnut	2656099A
White Oak	2656208A

Single Toggle/Single Decorator Switch Plate

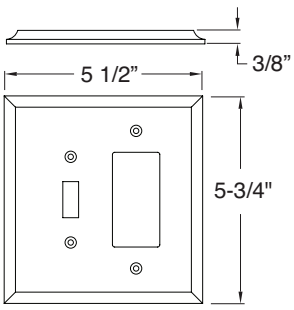

Specie	Part No.
Alder	2656100A
Cherry	2656101A
Maple	2656102A
Red Oak	2656103A
Walnut	2656104A
White Oak	2656209A

Double Toggle/Single Decorator Switch Plate

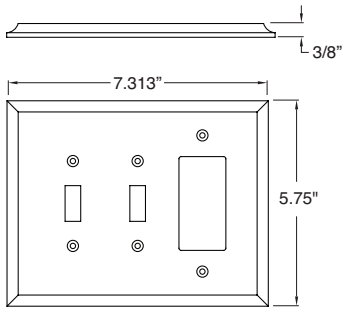

Specie	Part No.
Alder	2656105A
Cherry	2656106A
Maple	2656107A
Red Oak	2656108A
Walnut	2656109A
White Oak	2656210A

Please refer to pricing through Con-Nex, our online ordering program

Standard lead-time is 7-10 days.

Expedites available: 3 day red expedite (20% upcharge), blue expedite not available.

Vent Covers

- All vent covers crafted from solid hardwoods and made in the USA.
- Vent covers are made to fit seamlessly with your hardwood floors, against the toe kicks of your kitchen cabinets, against baseboards and walls.
- Toe Kick Vent Cover is pre-drilled to accept two mounting screws.
- Fixed slats diffuse air in two directions (non-adjustable).
- Custom sizes and designs are available. Contact Special Designs for a quote.
- Vent covers are available unfinished or finished; reference the Finishing Program Section for finish options and pricing.
- Lead-time 10 days unfinished, add 5 days for finishing.

Floor Vent Cover

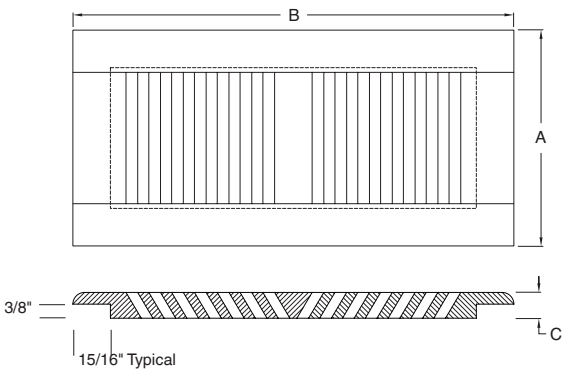

		Dimension		
Specie	**Part No.**	**A**	**B**	**C**
Cherry	2655791A	5-3/4"	11-3/4"	3/4"
Maple	2655792A	5-3/4"	11-3/4"	3/4"
Red Oak	2655793A	5-3/4"	11-3/4"	3/4"
Walnut	2656125A	5-3/4"	11-3/4"	3/4"
White Oak	2656211A	5-3/4"	11-3/4"	3/4"
Cherry	2655794A	5-3/4"	13-3/4"	3/4"
Maple	2655795A	5-3/4"	13-3/4"	3/4"
Red Oak	2655796A	5-3/4"	13-3/4"	3/4"
Walnut	2656126A	5-3/4"	13-3/4"	3/4"
White Oak	2656212A	5-3/4"	13-3/4"	3/4"
Cherry	2655797A	5-3/4"	15-3/4"	3/4"
Maple	2655798A	5-3/4"	15-3/4"	3/4"
Red Oak	2655799A	5-3/4"	15-3/4"	3/4"
Walnut	2656127A	5-3/4"	15-3/4"	3/4"
White Oak	2656213A	5-3/4"	15-3/4"	3/4"

Toe Kick Vent Cover

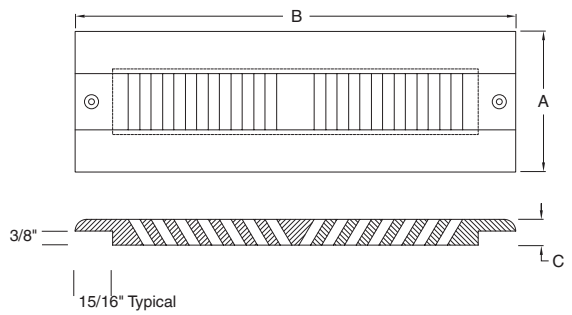

		Dimension		
Specie	**Part No.**	**A**	**B**	**C**
Cherry	2655782A	3-3/4"	11-3/4"	3/4"
Maple	2655783A	3-3/4"	11-3/4"	3/4"
Red Oak	2655784A	3-3/4"	11-3/4"	3/4"
Walnut	2656122A	3-3/4"	11-3/4"	3/4"
White Oak	2656214A	3-3/4"	11-3/4"	3/4"
Cherry	2655785A	3-3/4"	13-3/4"	3/4"
Maple	2655786A	3-3/4"	13-3/4"	3/4"
Red Oak	2655787A	3-3/4"	13-3/4"	3/4"
Walnut	2656123A	3-3/4"	13-3/4"	3/4"
White Oak	2656215A	3-3/4"	13-3/4"	3/4"
Cherry	2655788A	3-3/4"	15-3/4"	3/4"
Maple	2655789A	3-3/4"	15-3/4"	3/4"
Red Oak	2655790A	3-3/4"	15-3/4"	3/4"
Walnut	2656124A	3-3/4"	15-3/4"	3/4"
White Oak	2656216A	3-3/4"	15-3/4"	3/4"

Please refer to pricing through Con-Nex, our online ordering program

Create a Column

Split Spindles (accommodates 1-1/2" moulding)

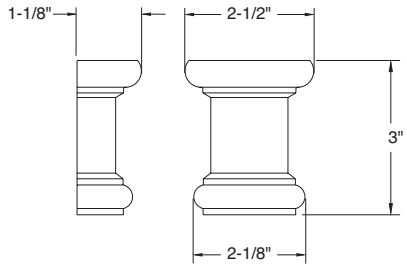

Specie	Part No.
Cherry	2650095A*
Maple	2650094A*

End Blocks (accommodates 1-1/2" moulding)

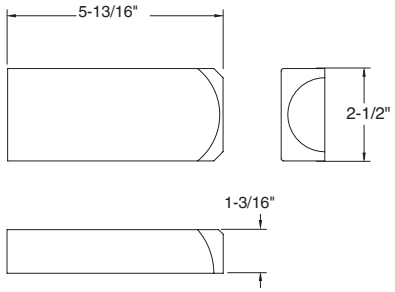

Specie	Part No.
Cherry	2650101A*
Maple	2650100A*

1-1/2" Mouldings

Plain

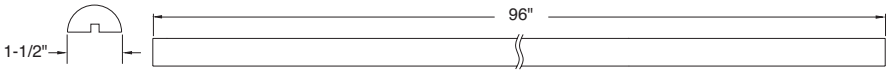

Specie	Part No.	Specie	Part No.
Cherry	2650104A	Maple	2650103A

Reeded

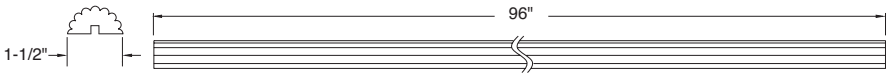

Specie	Part No.	Specie	Part No.
Cherry	2650110A	Maple	2650109A

Rope

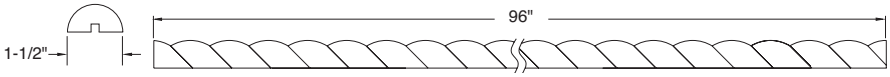

Specie	Part No.	Specie	Part No.
Cherry	112R	Maple	112R

Standard lead-time is 7-10 days, expedites not available.

Please refer to pricing through Con-Nex, our online ordering program

Standard lead-time is 7-10 days.

* Expedites available: 3 day red expedite (20% upcharge), blue expedite not available.

CONESTOGA™ WOOD SPECIALTIES

Wood Feet

Albion Square Foot SM

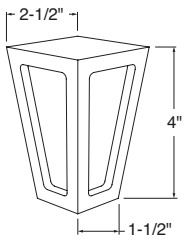

Specie	Whole
Alder	2652629A
Cherry	2652630A
Maple	2652631A
Paint Grade	2652632A
Red Oak	2652633A

Albion Square Foot LG

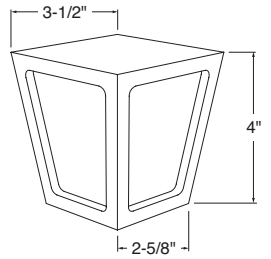

Specie	Whole
Alder	2652634A
Cherry	2652635A
Maple	2652636A
Paint Grade	2652637A
Red Oak	2652638A

Bailey Square Foot

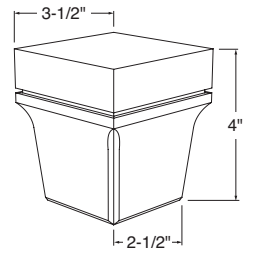

Specie	Whole
Alder	2652624A
Cherry	2652625A
Maple	2652626A
Paint Grade	2652627A
Red Oak	2652628A

Bun Foot

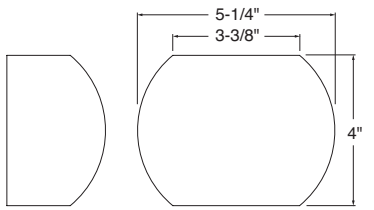

Specie	Whole	Split**
Alder	2650773A	2650774A
Cherry	2650581A*	2650584A
Maple	2650582A*	2650585A
Paint Grade	2655739A	2655740A
Red Oak	2650583A	2650586A

Corbett Square Foot

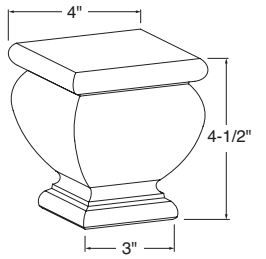

Specie	Whole
Alder	2655647A
Cherry	2655648A
Maple	2655649A
Paint Grade	2655650A
Red Oak	2655651A

Cosmopolitan Foot

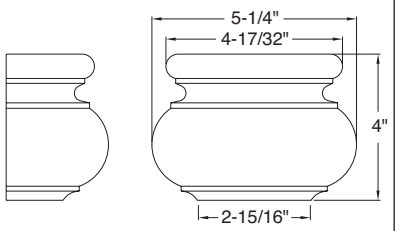

Specie	Whole	Split**
Alder	2650784A	2650785A
Cherry	2650611A*	2650614A
Maple	2650612A*	2650615A
Paint Grade	2655747A	2655748A
Red Oak	2650613A	2650616A

Country French Foot SM

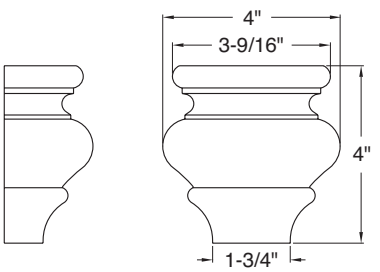

Specie	Whole	Split**
Alder	2650763A	2650764A
Cherry	2650551A*	2650554A
Maple	2650552A*	2650555A
Paint Grade	2655735A	2655736A
Red Oak	2650553A	2650556A

Country French Foot LG

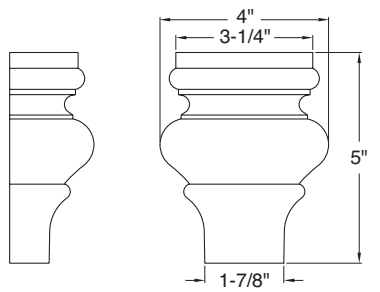

Specie	Whole	Split**
Alder	2650765A	2650766A
Cherry	2650557A*	2650560A
Maple	2650558A*	2650561A
Paint Grade	2655737A	2655738A
Red Oak	2650559A	2650562A

Countryside Foot

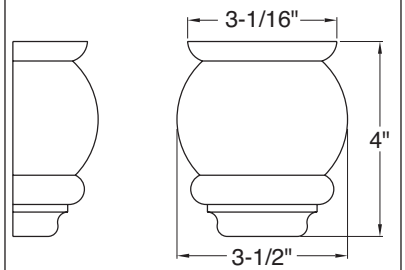

Specie	Whole	Split**
Alder	2650782A	2650783A
Cherry	2650605A*	2650608A
Maple	2650606A*	2650609A
Paint Grade	2655551A	2655552A
Red Oak	2650607A	2650610A

Please refer to pricing through Con-Nex, our online ordering program

**Must purchase in pairs.
Standard lead-time is 7-10 days, expedites not available.

* Expedites available: 3 day red expedite (20% upcharge), blue expedite not available.

Wood Feet (continued)

Estate Foot Reeded

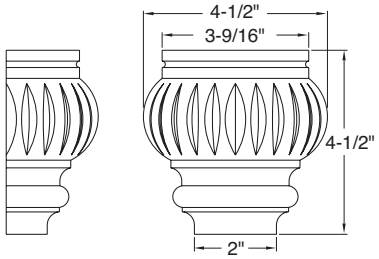

Specie	Whole	Split**
Alder	2650780A	2650781A
Cherry	2650599A*	2650602A
Maple	2650600A*	2650603A
Paint Grade	2655745A	2655746A
Red Oak	2650601A	2650604A

Estate Foot Plain

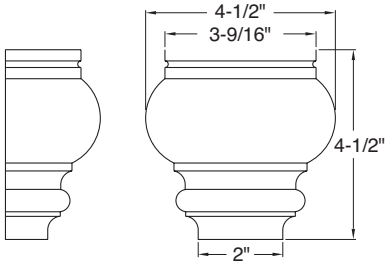

Specie	Whole	Split**
Alder	2650775A	2650777A
Cherry	2650587A*	2650590A
Maple	2650588A*	2650591A
Paint Grade	2655741A	2655742A
Red Oak	2650589A	2650592A

French Scroll Foot

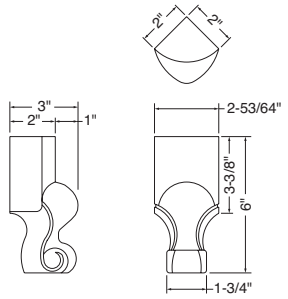

Specie	Whole
Cherry	634.27.616
Maple	634.27.116

Harlow Square Foot

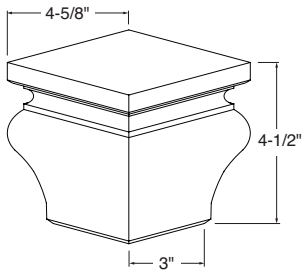

Specie	Whole
Alder	2652639A
Cherry	2652640A
Maple	2652641A
Paint Grade	2652642A
Red Oak	2652643A

Harlow Square Plain

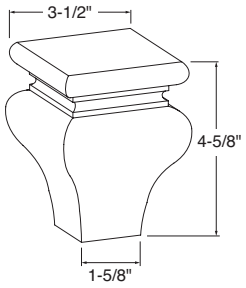

Specie	Whole
Alder	2655642A
Cherry	2655643A
Maple	2655644A
Paint Grade	2655645A
Red Oak	2655646A

Hillman Square Foot SM

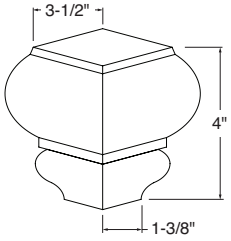

Specie	Whole
Alder	2652614A
Cherry	2652615A
Maple	2652616A
Paint Grade	2652617A
Red Oak	2652618A

Hillman Square Foot LG

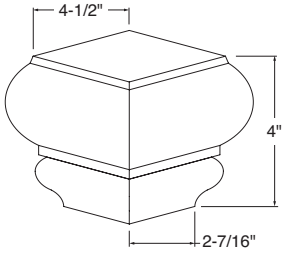

Specie	Whole
Alder	2652619A
Cherry	2652620A
Maple	2652621A
Paint Grade	2652622A
Red Oak	2652623A

Hobart Square Foot

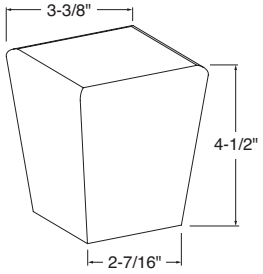

Specie	Whole
Cherry	2652474A
Maple	2652475A
Paint Grade	2652476A

Kennett Square Foot

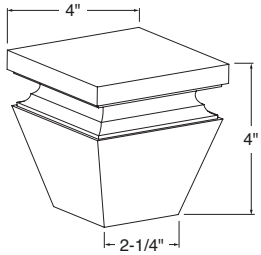

Specie	Whole
Cherry	2655800A
Maple	2655801A
Paint Grade	2655802A

Please refer to pricing through Con-Nex, our online ordering program

**Must purchase in pairs.

Standard lead-time is 7-10 days, expedites not available.

* Expedites available: 3 day red expedite (20% upcharge), blue expedite not available.

Wood Feet (continued)

Kreswick Foot

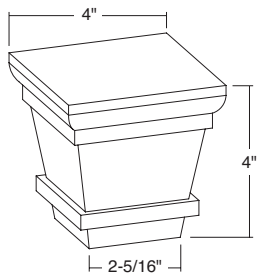

Specie	Whole
Alder	2653056A
Cherry	2653057A
Maple	2653058A
Paint Grade	2653059A
Red Oak	2653060A

Orwell Foot

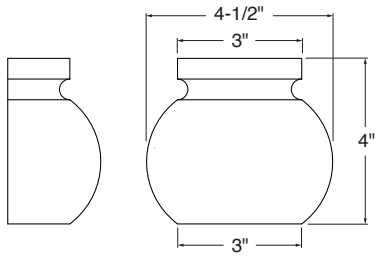

Specie	Whole	Split**
Alder	2652418A	2652423A
Cherry	2652419A	2652424A
Maple	2652420A	2652425A
Paint Grade	2652421A	2652426A
Red Oak	2652422A	2652427A

Shaker Square Foot

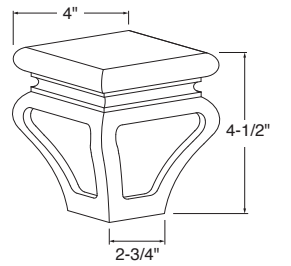

Specie	Whole
Alder	2655627A
Cherry	2655628A
Maple	2655629A
Paint Grade	2655630A
Red Oak	2655631A

Square Taper Foot SM

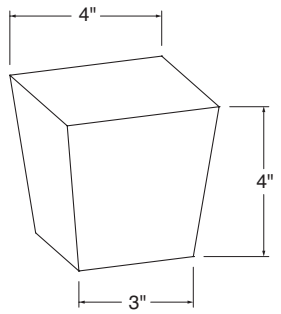

Specie	Whole	Split**
Alder	2650788A	2650789A
Cherry	2650623A*	2650626A
Maple	2650624A*	2650627A
Paint Grade	2655751A	2655752A
Red Oak	2650625A	2650628A

Square Taper Foot LG

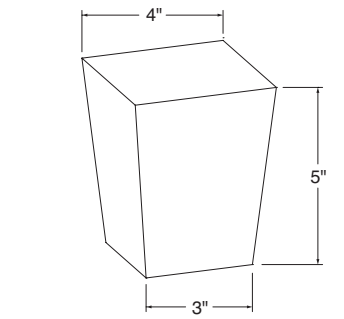

Specie	Whole	Split**
Alder	2650790A	2650791A
Cherry	2650629A*	2650632A
Maple	2650630A*	2650633A
Paint Grade	2655753A	2655754A
Red Oak	2650631A	2650634A

Tulip Foot SM

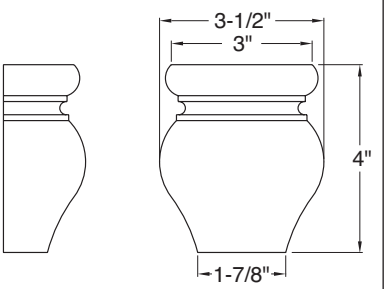

Specie	Whole	Split**
Alder	2650767A	2650768A
Cherry	2650563A*	2650566A
Maple	2650564A*	2650567A
Paint Grade	2655547A	2655548A
Red Oak	2650565A	2650568

Tulip Foot LG

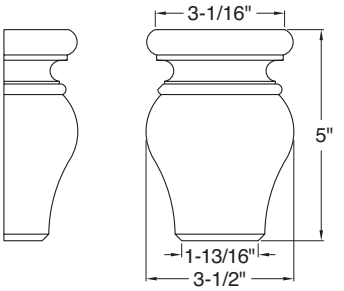

Specie	Whole	Split**
Alder	2650769A	2650770A
Cherry	2650569A*	2650572A
Maple	2650570A*	2650573A
Paint Grade	2655549A	2655550A
Red Oak	2650571A	2650574A

Vessel Foot

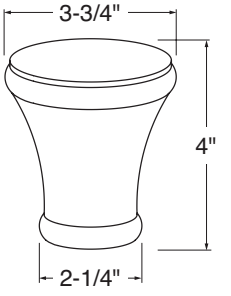

Specie	Whole	Split**
Alder	2652408A	2652413A
Cherry	2652409A	2652414A
Maple	2652410A	2652415A
Paint Grade	2652411A	2652416A
Red Oak	2652412A	2652417A

Please refer to pricing through Con-Nex, our online ordering program

**Must purchase in pairs.
Standard lead-time is 7-10 days.

* Expedites available: 3 day red expedite (20% upcharge), blue expedite not available.

Wood Feet (continued)

Rochelle Foot (Corner)

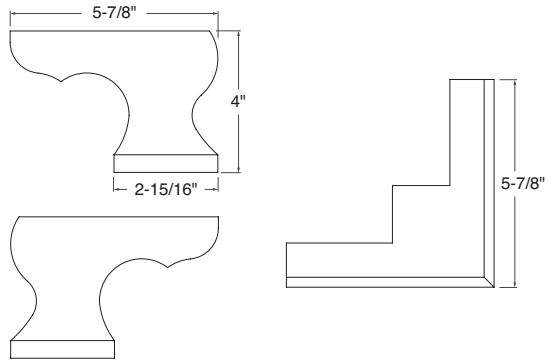

Specie	Whole
Cherry	2652480A
Maple	2652481A
Paint Grade	2652482A

Rochelle Straight Foot (Left & Right)

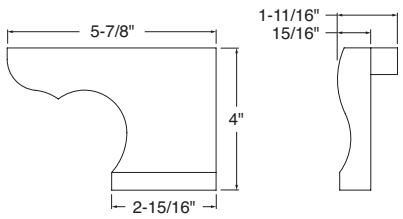

Specie	Whole**
Alder	2652524A
Cherry	2652517A
Maple	2652518A
Paint Grade	2652519A

Please refer to pricing through Con-Nex, our online ordering program

**Part numbers shown are for the pair.
Standard lead-time is 7-10 days, expedites not available.

Wood Corbels

Concord Corbel

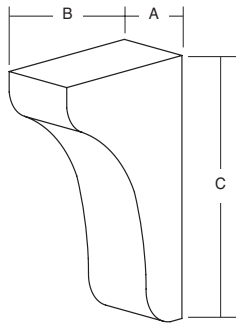

		Dimension		
Specie	**Part No.**	**A**	**B**	**C**
Alder	2652899A	1-3/4"	1-1/2"	3"
Cherry	2652900A	1-3/4"	1-1/2"	3"
Maple	2652901A	1-3/4"	1-1/2"	3"
Paint Grade	2652902A	1-3/4"	1-1/2"	3"
Red Oak	2652903A	1-3/4"	1-1/2"	3"
Alder	2652894A	1-3/4"	4"	6-1/2"
Cherry	2652895A	1-3/4"	4"	6-1/2"
Maple	2652896A	1-3/4"	4"	6-1/2"
Paint Grade	2652897A	1-3/4"	4"	6-1/2"
Red Oak	2652898A	1-3/4"	4"	6-1/2"
Alder	2652889A	1-3/4"	5"	8-1/16"
Cherry	2652890A	1-3/4"	5"	8-1/16"
Maple	2652891A	1-3/4"	5"	8-1/16"
Paint Grade	2652892A	1-3/4"	5"	8-1/16"
Red Oak	2652893A	1-3/4"	5"	8-1/16"
Alder	2652884A	1-3/4"	6"	9-5/8"
Cherry	2652885A	1-3/4"	6"	9-5/8"
Maple	2652886A	1-3/4"	6"	9-5/8"
Paint Grade	2652887A	1-3/4"	6"	9-5/8"
Red Oak	2652888A	1-3/4"	6"	9-5/8"
Alder	2652879A	1-3/4"	8"	12-7/8"
Cherry	2652880A	1-3/4"	8"	12-7/8"
Maple	2652881A	1-3/4"	8"	12-7/8"
Paint Grade	2652882A	1-3/4"	8"	12-7/8"
Red Oak	2652883A	1-3/4"	8"	12-7/8"

		Dimension		
Specie	**Part No.**	**A**	**B**	**C**
Alder	2652924A	3"	1-1/2"	3"
Cherry	2652925A	3"	1-1/2"	3"
Maple	2652926A	3"	1-1/2"	3"
Paint Grade	2652927A	3"	1-1/2"	3"
Red Oak	2652928A	3"	1-1/2"	3"
Alder	2652919A	3"	4"	6-1/2"
Cherry	2652920A	3"	4"	6-1/2"
Maple	2652921A	3"	4"	6-1/2"
Paint Grade	2652922A	3"	4"	6-1/2"
Red Oak	2652923A	3"	4"	6-1/2"
Alder	2652914A	3"	5"	8-1/16"
Cherry	2652915A	3"	5"	8-1/16"
Maple	2652916A	3"	5"	8-1/16"
Paint Grade	2652917A	3"	5"	8-1/16"
Red Oak	2652918A	3"	5"	8-1/16"
Alder	2652909A	3"	6"	9-5/8"
Cherry	2652910A	3"	6"	9-5/8"
Maple	2652911A	3"	6"	9-5/8"
Paint Grade	2652912A	3"	6"	9-5/8"
Red Oak	2652913A	3"	6"	9-5/8"
Alder	2652904A	3"	8"	12-7/8"
Cherry	2652905A	3"	8"	12-7/8"
Maple	2652906A	3"	8"	12-7/8"
Paint Grade	2652907A	3"	8"	12-7/8"
Red Oak	2652908A	3"	8"	12-7/8"

Please refer to pricing through Con-Nex, our online ordering program

Wood Corbels (continued)

Chandler Corbel

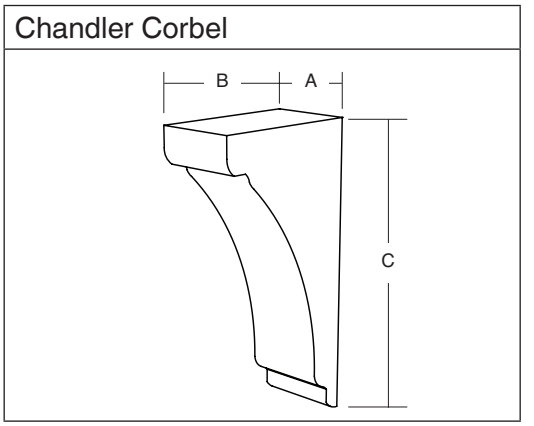

		Dimension		
Specie	**Part No.**	**A**	**B**	**C**
Alder	2652659A	1-3/4"	4"	7-3/16"
Cherry	2652660A	1-3/4"	4"	7-3/16"
Maple	2652661A	1-3/4"	4"	7-3/16"
Paint Grade	2652662A	1-3/4"	4"	7-3/16"
Red Oak	2652663A	1-3/4"	4"	7-3/16"
Alder	2652654A	1-3/4"	5"	9"
Cherry	2652655A	1-3/4"	5"	9"
Maple	2652656A	1-3/4"	5"	9"
Paint Grade	2652657A	1-3/4"	5"	9"
Red Oak	2652658A	1-3/4"	5"	9"
Alder	2652649A	1-3/4"	5-1/2"	10-5/8"
Cherry	2652650A	1-3/4"	5-1/2"	10-5/8"
Maple	2652651A	1-3/4"	5-1/2"	10-5/8"
Paint Grade	2652652A	1-3/4"	5-1/2"	10-5/8"
Red Oak	2652653A	1-3/4"	5-1/2"	10-5/8"
Alder	2652644A	1-3/4"	8"	14-5/32"
Cherry	2652645A	1-3/4"	8"	14-5/32"
Maple	2652646A	1-3/4"	8"	14-5/32"
Paint Grade	2652647A	1-3/4"	8"	14-5/32"
Red Oak	2652648A	1-3/4"	8"	14-5/32"

		Dimension		
Specie	**Part No.**	**A**	**B**	**C**
Alder	2652679A	3"	4"	7-3/16"
Cherry	2652680A	3"	4"	7-3/16"
Maple	2652681A	3"	4"	7-3/16"
Paint Grade	2652682A	3"	4"	7-3/16"
Red Oak	2652683A	3"	4"	7-3/16"
Alder	2652674A	3"	5"	9"
Cherry	2652675A	3"	5"	9"
Maple	2652676A	3"	5"	9"
Paint Grade	2652677A	3"	5"	9"
Red Oak	2652678A	3"	5"	9"
Alder	2652669A	3"	5-1/2"	10-5/8"
Cherry	2652670A	3"	5-1/2"	10-5/8"
Maple	2652671A	3"	5-1/2"	10-5/8"
Paint Grade	2652672A	3"	5-1/2"	10-5/8"
Red Oak	2652673A	3"	5-1/2"	10-5/8"
Alder	2652664A	3"	8"	14-5/32"
Cherry	2652665A	3"	8"	14-5/32"
Maple	2652666A	3"	8"	14-5/32"
Paint Grade	2652667A	3"	8"	14-5/32"
Red Oak	2652668A	3"	8"	14-5/32"

Please refer to pricing through Con-Nex, our online ordering program

Wood Corbels (continued)

Logan Corbel

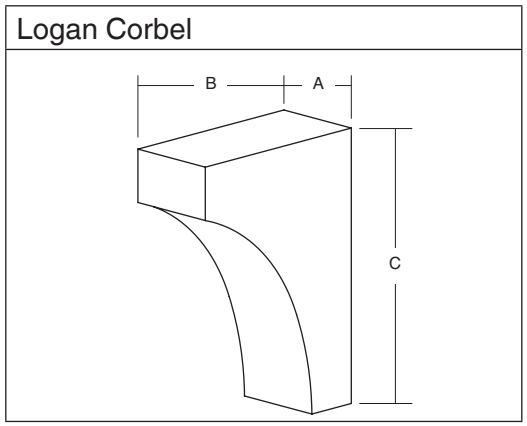

		Dimension		
Specie	**Part No.**	**A**	**B**	**C**
Alder	2652989A	1-3/4"	3"	3"
Cherry	2652990A	1-3/4"	3"	3"
Maple	2652991A	1-3/4"	3"	3"
Paint Grade	2652992A	1-3/4"	3"	3"
Red Oak	2652993A	1-3/4"	3"	3"
Alder	2652984A	1-3/4"	4"	6"
Cherry	2652985A	1-3/4"	4"	6"
Maple	2652986A	1-3/4"	4"	6"
Paint Grade	2652987A	1-3/4"	4"	6"
Red Oak	2652988A	1-3/4"	4"	6"
Alder	2652979A	1-3/4"	5"	7-1/2"
Cherry	2652980A	1-3/4"	5"	7-1/2"
Maple	2652981A	1-3/4"	5"	7-1/2"
Paint Grade	2652982A	1-3/4"	5"	7-1/2"
Red Oak	2652983A	1-3/4"	5"	7-1/2"
Alder	2652974A	1-3/4"	6-1/2"	9"
Cherry	2652975A	1-3/4"	6-1/2"	9"
Maple	2652976A	1-3/4"	6-1/2"	9"
Paint Grade	2652977A	1-3/4"	6-1/2"	9"
Red Oak	2652978A	1-3/4"	6-1/2"	9"
Alder	2652969A	1-3/4"	8"	12"
Cherry	2652970A	1-3/4"	8"	12"
Maple	2652971A	1-3/4"	8"	12"
Paint Grade	2652972A	1-3/4"	8"	12"
Red Oak	2652973A	1-3/4"	8"	12"

		Dimension		
Specie	**Part No.**	**A**	**B**	**C**
Alder	2653014A	3"	3"	3"
Cherry	2653015A	3"	3"	3"
Maple	2653016A	3"	3"	3"
Paint Grade	2653017A	3"	3"	3"
Red Oak	2653018A	3"	3"	3"
Alder	2653009A	3"	4"	6"
Cherry	2653010A	3"	4"	6"
Maple	2653011A	3"	4"	6"
Paint Grade	2653012A	3"	4"	6"
Red Oak	2653013A	3"	4"	6"
Alder	2653004A	3"	5"	7-1/2"
Cherry	2653005A	3"	5"	7-1/2"
Maple	2653006A	3"	5"	7-1/2"
Paint Grade	2653007A	3"	5"	7-1/2"
Red Oak	2653008A	3"	5"	7-1/2"
Alder	2652999A	3"	6-1/2"	9"
Cherry	2653000A	3"	6-1/2"	9"
Maple	2653001A	3"	6-1/2"	9"
Paint Grade	2653002A	3"	6-1/2"	9"
Red Oak	2653003A	3"	6-1/2"	9"
Alder	2652994A	3"	8"	12"
Cherry	2652995A	3"	8"	12"
Maple	2652996A	3"	8"	12"
Paint Grade	2652997A	3"	8"	12"
Red Oak	2652998A	3"	8"	12"

Please refer to pricing through Con-Nex, our online ordering program

Wood Corbels (continued)

Pickford Corbel

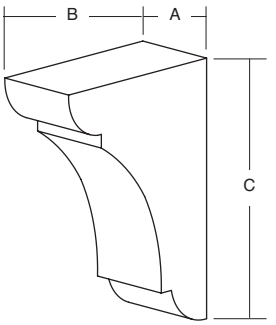

		Dimension		
Specie	**Part No.**	**A**	**B**	**C**
Alder	2652704A	1-3/4"	3"	3"
Cherry	2652705A	1-3/4"	3"	3"
Maple	2652706A	1-3/4"	3"	3"
Paint Grade	2652707A	1-3/4"	3"	3"
Red Oak	2652708A	1-3/4"	3"	3"
Alder	2652699A	1-3/4"	4"	6"
Cherry	2652700A	1-3/4"	4"	6"
Maple	2652701A	1-3/4"	4"	6"
Paint Grade	2652702A	1-3/4"	4"	6"
Red Oak	2652703A	1-3/4"	4"	6"
Alder	2652694A	1-3/4"	5"	7-1/2"
Cherry	2652695A	1-3/4"	5"	7-1/2"
Maple	2652696A	1-3/4"	5"	7-1/2"
Paint Grade	2652697A	1-3/4"	5"	7-1/2"
Red Oak	2652698A	1-3/4"	5"	7-1/2"
Alder	2652689A	1-3/4"	6-1/2"	9"
Cherry	2652690A	1-3/4"	6-1/2"	9"
Maple	2652691A	1-3/4"	6-1/2"	9"
Paint Grade	2652692A	1-3/4"	6-1/2"	9"
Red Oak	2652693A	1-3/4"	6-1/2"	9"
Alder	2652684A	1-3/4"	8"	12"
Cherry	2652685A	1-3/4"	8"	12"
Maple	2652686A	1-3/4"	8"	12"
Paint Grade	2652687A	1-3/4"	8"	12"
Red Oak	2652688A	1-3/4"	8"	12"

		Dimension		
Specie	**Part No.**	**A**	**B**	**C**
Alder	2652729A	3"	3"	3"
Cherry	2652730A	3"	3"	3"
Maple	2652731A	3"	3"	3"
Paint Grade	2652732A	3"	3"	3"
Red Oak	2652733A	3"	3"	3"
Alder	2652724A	3"	4"	6"
Cherry	2652725A	3"	4"	6"
Maple	2652726A	3"	4"	6"
Paint Grade	2652727A	3"	4"	6"
Red Oak	2652728A	3"	4"	6"
Alder	2652719A	3"	5"	7-1/2"
Cherry	2652720A	3"	5"	7-1/2"
Maple	2652721A	3"	5"	7-1/2"
Paint Grade	2652722A	3"	5"	7-1/2"
Red Oak	2652723A	3"	5"	7-1/2"
Alder	2652714A	3"	6-1/2"	9"
Cherry	2652715A	3"	6-1/2"	9"
Maple	2652716A	3"	6-1/2"	9"
Paint Grade	2652717A	3"	6-1/2"	9"
Red Oak	2652718A	3"	6-1/2"	9"
Alder	2652709A	3"	8"	12"
Cherry	2652710A	3"	8"	12"
Maple	2652711A	3"	8"	12"
Paint Grade	2652712A	3"	8"	12"
Red Oak	2652713A	3"	8"	12"

Please refer to pricing through Con-Nex, our online ordering program

Wood Corbels (continued)

Eaton Corbel

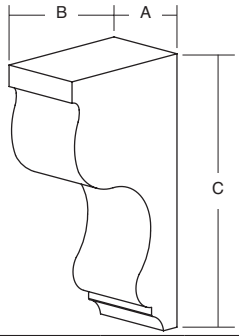

		Dimension		
Specie	**Part No.**	**A**	**B**	**C**
Alder	2652854A	1-3/4"	3-1/4"	6-5/16"
Cherry	2652855A	1-3/4"	3-1/4"	6-5/16"
Maple	2652856A	1-3/4"	3-1/4"	6-5/16"
Paint Grade	2652857A	1-3/4"	3-1/4"	6-5/16"
Red Oak	2652858A	1-3/4"	3-1/4"	6-5/16"
Alder	2652849A	1-3/4"	4"	7-3/4"
Cherry	2652850A	1-3/4"	4"	7-3/4"
Maple	2652851A	1-3/4"	4"	7-3/4"
Paint Grade	2652852A	1-3/4"	4"	7-3/4"
Red Oak	2652853A	1-3/4"	4"	7-3/4"
Alder	2652844A	1-3/4"	5"	9-9/16"
Cherry	2652845A	1-3/4"	5"	9-9/16"
Maple	2652846A	1-3/4"	5"	9-9/16"
Paint Grade	2652847A	1-3/4"	5"	9-9/16"
Red Oak	2652848A	1-3/4"	5"	9-9/16"
Alder	2652839A	1-3/4"	6-1/2"	12-1/2"
Cherry	2652840A	1-3/4"	6-1/2"	12-1/2"
Maple	2652841A	1-3/4"	6-1/2"	12-1/2"
Paint Grade	2652842A	1-3/4"	6-1/2"	12-1/2"
Red Oak	2652843A	1-3/4"	6-1/2"	12-1/2"
Alder	2652874A	3"	3-1/4"	6-5/16"
Cherry	2652875A	3"	3-1/4"	6-5/16"
Maple	2652876A	3"	3-1/4"	6-5/16"
Paint Grade	2652877A	3"	3-1/4"	6-5/16"
Red Oak	2652878A	3"	3-1/4"	6-5/16"
Alder	2652869A	3"	4"	7-3/4"
Cherry	2652870A	3"	4"	7-3/4"
Maple	2652871A	3"	4"	7-3/4"
Paint Grade	2652872A	3"	4"	7-3/4"
Red Oak	2652873A	3"	4"	7-3/4"
Alder	2652864A	3"	5"	9-9/16"
Cherry	2652865A	3"	5"	9-9/16"
Maple	2652866A	3"	5"	9-9/16"
Paint Grade	2652867A	3"	5"	9-9/16"
Red Oak	2652868A	3"	5"	9-9/16"
Alder	2652859A	3"	6-1/2"	12-1/2"
Cherry	2652860A	3"	6-1/2"	12-1/2"
Maple	2652861A	3"	6-1/2"	12-1/2"
Paint Grade	2652862A	3"	6-1/2"	12-1/2"
Red Oak	2652863A	3"	6-1/2"	12-1/2"

Jennings Corbel

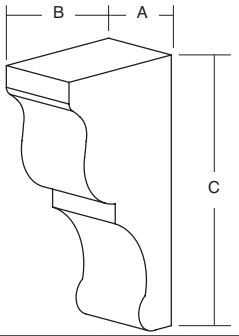

		Dimension		
Specie	**Part No.**	**A**	**B**	**C**
Alder	2652749A	1-3/4"	3-1/2"	6-1/8"
Cherry	2652750A	1-3/4"	3-1/2"	6-1/8"
Maple	2652751A	1-3/4"	3-1/2"	6-1/8"
Paint Grade	2652752A	1-3/4"	3-1/2"	6-1/8"
Red Oak	2652753A	1-3/4"	3-1/2"	6-1/8"
Alder	2652744A	1-3/4"	4-1/4"	7-1/2"
Cherry	2652745A	1-3/4"	4-1/4"	7-1/2"
Maple	2652746A	1-3/4"	4-1/4"	7-1/2"
Paint Grade	2652747A	1-3/4"	4-1/4"	7-1/2"
Red Oak	2652748A	1-3/4"	4-1/4"	7-1/2"
Alder	2652739A	1-3/4"	4-7/8"	9-1/2"
Cherry	2652740A	1-3/4"	4-7/8"	9-1/2"
Maple	2652741A	1-3/4"	4-7/8"	9-1/2"
Paint Grade	2652742A	1-3/4"	4-7/8"	9-1/2"
Red Oak	2652743A	1-3/4"	4-7/8"	9-1/2"
Alder	2652734A	1-3/4"	6-9/16"	12-3/4"
Cherry	2652735A	1-3/4"	6-9/16"	12-3/4"
Maple	2652736A	1-3/4"	6-9/16"	12-3/4"
Paint Grade	2652737A	1-3/4"	6-9/16"	12-3/4"
Red Oak	2652738A	1-3/4"	6-9/16"	12-3/4"
Alder	2652769A	3"	3-1/2"	6-1/8"
Cherry	2652770A	3"	3-1/2"	6-1/8"
Maple	2652771A	3"	3-1/2"	6-1/8"
Paint Grade	2652772A	3"	3-1/2"	6-1/8"
Red Oak	2652773A	3"	3-1/2"	6-1/8"
Alder	2652764A	3"	4-1/4"	7-1/2"
Cherry	2652765A	3"	4-1/4"	7-1/2"
Maple	2652766A	3"	4-1/4"	7-1/2"
Paint Grade	2652767A	3"	4-1/4"	7-1/2"
Red Oak	2652768A	3"	4-1/4"	7-1/2"
Alder	2652759A	3"	4-7/8"	9-1/2"
Cherry	2652760A	3"	4-7/8"	9-1/2"
Maple	2652761A	3"	4-7/8"	9-1/2"
Paint Grade	2652762A	3"	4-7/8"	9-1/2"
Red Oak	2652763A	3"	4-7/8"	9-1/2"
Alder	2652754A	3"	6-9/16"	12-3/4"
Cherry	2652755A	3"	6-9/16"	12-3/4"
Maple	2652756A	3"	6-9/16"	12-3/4"
Paint Grade	2652757A	3"	6-9/16"	12-3/4"
Red Oak	2652758A	3"	6-9/16"	12-3/4"

Please refer to pricing through Con-Nex, our online ordering program

Wood Corbels (continued)

Houghton Corbel

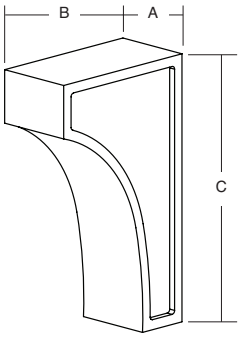

		Dimension		
Specie	**Part No.**	**A**	**B**	**C**
Alder	2652964A	3"	3"	5"
Cherry	2652965A	3"	3"	5"
Maple	2652966A	3"	3"	5"
Paint Grade	2652967A	3"	3"	5"
Red Oak	2652968A	3"	3"	5"
Alder	2652959A	3"	4-1/2"	7-1/2"
Cherry	2652960A	3"	4-1/2"	7-1/2"
Maple	2652961A	3"	4-1/2"	7-1/2"
Paint Grade	2652962A	3"	4-1/2"	7-1/2"
Red Oak	2652963A	3"	4-1/2"	7-1/2"
Alder	2652954A	3"	6"	10"
Cherry	2652955A	3"	6"	10"
Maple	2652956A	3"	6"	10"
Paint Grade	2652957A	3"	6"	10"
Red Oak	2652958A	3"	6"	10"
Alder	2652949A	3"	8-1/2"	14"
Cherry	2652950A	3"	8-1/2"	14"
Maple	2652951A	3"	8-1/2"	14"
Paint Grade	2652952A	3"	8-1/2"	14"
Red Oak	2652953A	3"	8-1/2"	14"
Alder	2652944A	4-3/4"	12"	22"
Cherry	2652945A	4-3/4"	12"	22"
Maple	2652946A	4-3/4"	12"	22"
Paint Grade	2652947A	4-3/4"	12"	22"
Red Oak	2652948A	4-3/4"	12"	22"

Concord Bracket

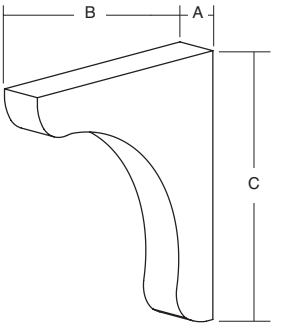

		Dimension		
Specie	**Part No.**	**A**	**B**	**C**
Alder	2652934A	1-3/4"	10"	10"
Cherry	2652935A	1-3/4"	10"	10"
Maple	2652936A	1-3/4"	10"	10"
Paint Grade	2652937A	1-3/4"	10"	10"
Red Oak	2652938A	1-3/4"	10"	10"
Alder	2652939A	3"	10"	10"
Cherry	2652940A	3"	10"	10"
Maple	2652941A	3"	10"	10"
Paint Grade	2652942A	3"	10"	10"
Red Oak	2652943A	3"	10"	10"

Jennings Bracket

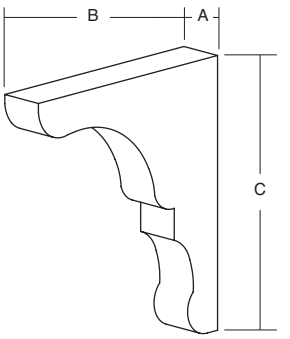

		Dimension		
Specie	**Part No.**	**A**	**B**	**C**
Alder	2652779A	1-3/4"	10"	10"
Cherry	2652780A	1-3/4"	10"	10"
Maple	2652781A	1-3/4"	10"	10"
Paint Grade	2652782A	1-3/4"	10"	10"
Red Oak	2652783A	1-3/4"	10"	10"
Alder	2652784A	3"	10"	10"
Cherry	2652785A	3"	10"	10"
Maple	2652786A	3"	10"	10"
Paint Grade	2652787A	3"	10"	10"
Red Oak	2652788A	3"	10"	10"

Please refer to pricing through Con-Nex, our online ordering program

Wood Corbels (continued)

Simplicity Corbel MED

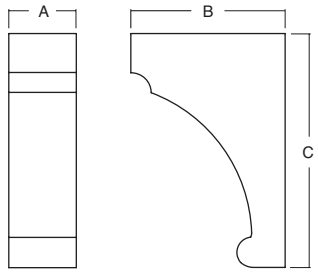

		Dimension		
Specie	**Part No.**	**A**	**B**	**C**
Alder	2655692A	2-3/4"	6"	10"
Cherry	2655693A	2-3/4"	6"	10"
Maple	2655694A	2-3/4"	6"	10"
Paint Grade	2655695A	2-3/4"	6"	10"
Red Oak	2655696A	2-3/4"	6"	10"
Alder	2655687A	3-1/2"	8"	12"
Cherry	2655688A	3-1/2"	8"	12"
Maple	2655689A	3-1/2"	8"	12"
Paint Grade	2655690A	3-1/2"	8"	12"
Red Oak	2655691A	3-1/2"	8"	12"

Simplicity Corbel SM

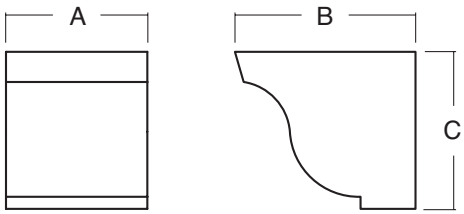

		Dimension		
Specie	**Part No.**	**A**	**B**	**C**
Alder	2655682A	4-1/2	5-3/4	5"
Cherry	2655683A	4-1/2"	5-3/4"	5"
Maple	2655684A	4-1/2"	5-3/4"	5"
Paint Grade	2655685A	4-1/2"	5-3/4"	5"
Red Oak	2655686A	4-1/2"	5-3/4"	5"

Simplicity Routed Corbel

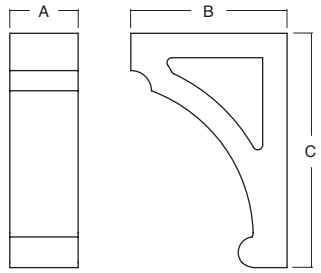

		Dimension		
Specie	**Part No.**	**A**	**B**	**C**
Alder	2655657A	3-1/2"	8"	12"
Cherry	2655658A	3-1/2"	8"	12"
Maple	2655659A	3-1/2"	8"	12"
Paint Grade	2655660A	3-1/2"	8"	12"
Red Oak	2655661A	3-1/2"	8"	12"

Please refer to pricing through Con-Nex, our online ordering program

Wood Corbels (continued)

Counter Support Bracket (must purchase in pairs)

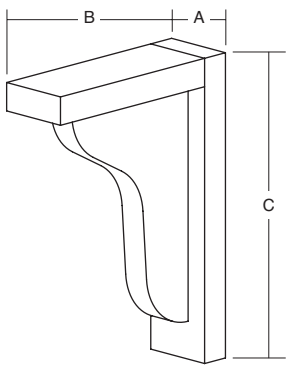

		Dimension		
Specie	**Part No.***	**A**	**B**	**C**
Alder	2200186A	1-15/16"	5-15/16"	8-1/16"
Cherry	2200183A	1-15/16"	5-15/16"	8-1/16"
Maple	2200184A	1-15/16"	5-15/16"	8-1/16"
Red Oak	2200185A	1-15/16"	5-15/16"	8-1/16"
Alder	2200182A	1-15/16"	7-15/16"	10-1/16"
Cherry	2200179A	1-15/16"	7-15/16"	10-1/16"
Maple	2200180A	1-15/16"	7-15/16"	10-1/16"
Red Oak	2200181A	1-15/16"	7-15/16"	10-1/16"

*Part Number reflects each

Laurel Bracket

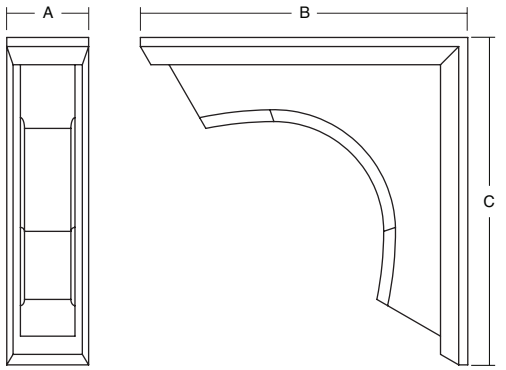

		Dimension		
Specie	**Part No.**	**A**	**B**	**C**
Alder	2655827A	3-3/4"	9"	9"
Cherry	2655828A	3-3/4"	9"	9"
Maple	2655829A	3-3/4"	9"	9"
Red Oak	2655826A	3-3/4"	9"	9"
Alder	2655831A	3-3/4"	9"	14"
Cherry	2655832A	3-3/4"	9"	14"
Maple	2655833A	3-3/4"	9"	14"
Red Oak	2655830A	3-3/4"	9"	14"

Millwood Bracket with Metal Arch

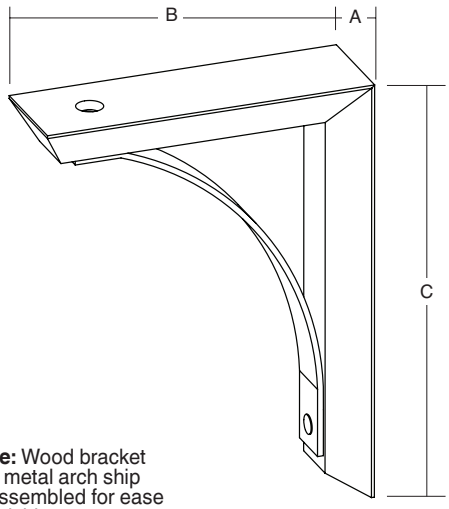

Note: Wood bracket and metal arch ship unassembled for ease of finishing.

			Dimension		
	Specie	**Part No.**	**A**	**B**	**C**
Flat Black	Cherry	2656152A	2-1/8"	7"	9"
		2656160A	2-1/8"	9"	12"
	Maple	2656154A	2-1/8"	7"	9"
		2656162A	2-1/8"	9"	12"
	Red Oak	2656150A	2-1/8"	7"	9"
		2656158A	2-1/8"	9"	12"
	White Oak	2656156A	2-1/8"	7"	9"
		2656164A	2-1/8"	9"	12"

Please refer to pricing through Con-Nex, our online ordering program

Wood Corbels (continued)

Arts & Crafts Corbel MED

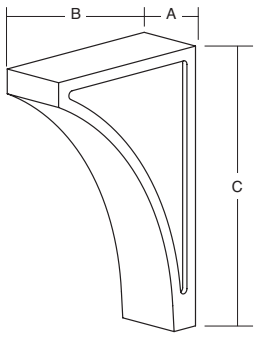

		Dimension		
Specie	**Part No.**	**A**	**B**	**C**
Maple	194.69.151	3"	8"	12"

Arts & Crafts Corbel LG

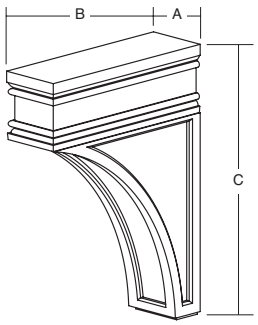

		Dimension		
Specie	**Part No.**	**A**	**B**	**C**
Cherry	198.04.630	2-13/16"	8-7/8"	12"
Maple	198.04.130	2-13/16"	8-7/8"	12"

Shaker Corbel SM

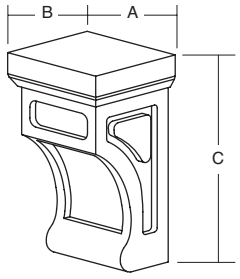

		Dimension		
Specie	**Part No.**	**A**	**B**	**C**
Alder	2655662A	4"	3-1/2"	6-3/4"
Cherry	2655663A	4"	3-1/2"	6-3/4"
Maple	2655664A	4"	3-1/2"	6-3/4"
Paint Grade	2655665A	4"	3-1/2"	6-3/4"
Red Oak	2655666A	4"	3-1/2"	6-3/4"

Arts & Crafts Corbel SM

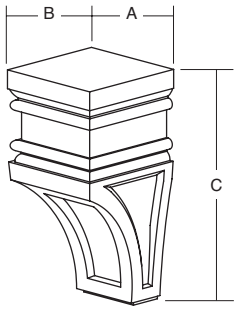

		Dimension		
Specie	**Part No.**	**A**	**B**	**C**
Cherry	198.04.640	5-3/4"	3-15/16"	9"
Maple	198.04.140	5-3/4"	3-15/16"	9"
Cherry	198.04.650	2-7/8"	2-15/16"	6"
Maple	198.04.150	2-7/8"	2-15/16"	6"

Shaker Corbel MED

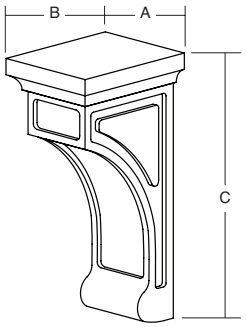

		Dimension		
Specie	**Part No.**	**A**	**B**	**C**
Alder	2655667A	5-3/8"	6-13/16"	13-5/16"
Cherry	2655668A	5-3/8"	6-13/16"	13-5/16
Maple	2655669A	5-3/8"	6-13/16"	13-5/16"
Paint Grade	2655670A	5-3/8"	6-13/16"	13-5/16"
Red Oak	2655671A	5-3/8"	6-13/16"	13-5/16"

Traditional Corbel

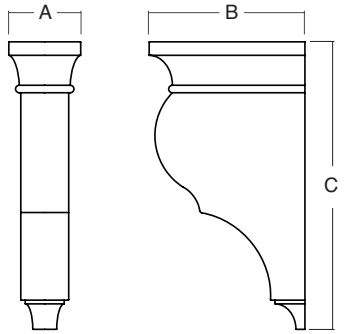

		Dimension		
Specie	**Part No.**	**A**	**B**	**C**
Maple	194.69.150	3"	6-1/2"	12"

Please refer to pricing through Con-Nex, our online ordering program

Wood Corbels (continued)

Acanthus Corbel SM

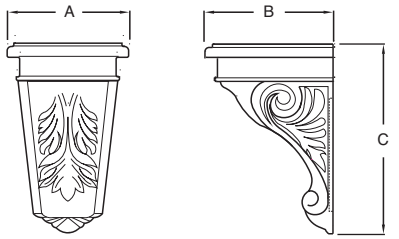

		Dimension		
Specie	**Part No.**	**A**	**B**	**C**
Cherry	194.69.604	5-3/4"	6-1/16"	9"
Maple	194.69.104	5-3/4"	6-1/16"	9"

Acanthus Corbel MED

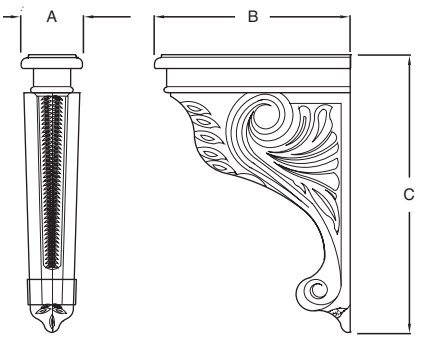

		Dimension		
Specie	**Part No.**	**A**	**B**	**C**
Cherry	194.69.608	2-7/8"	9-3/16"	13"
Maple	194.69.108	2-7/8"	9-3/16"	13"

Isabelle Corbel

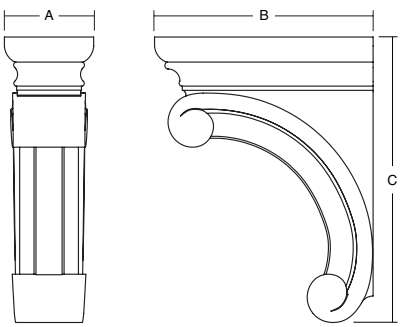

		Dimension		
Specie	**Part No.**	**A**	**B**	**C**
Cherry	2655806A	2-1/2"	6-1/8"	8"
Maple	2655807A	2-1/2"	6-1/8"	8"
Cherry	2655809A	4"	9-1/2"	14"
Maple	2655810A	4"	9-1/2"	14"

Scroll Corbel SM

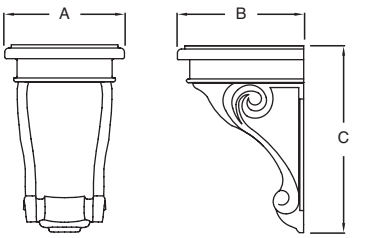

		Dimension		
Specie	**Part No.**	**A**	**B**	**C**
Cherry	194.69.605	5-3/4"	6-1/16"	9"
Maple	194.69.105	5-3/4"	6-1/16"	9"

Scroll Corbel MED

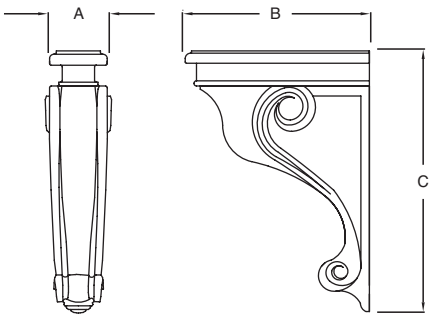

		Dimension		
Specie	**Part No.**	**A**	**B**	**C**
Cherry	194.69.606	2-7/8"	9-3/16"	13"
Maple	194.69.106	2-7/8"	9-3/16"	13"

Scroll Routed Corbel

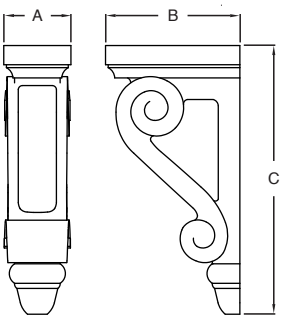

		Dimension		
Specie	**Part No.**	**A**	**B**	**C**
Cherry	2655653A	3-1/2"	7"	14"
Maple	2655654A	3-1/2"	7"	14"

Please refer to pricing through Con-Nex, our online ordering program

Wood Knee Brackets

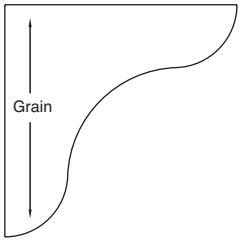

Style "A"

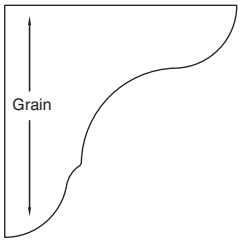

Style "B"

- All published species available.
- Use Design Charge plus square foot Material Charge.
- Material Category B.
- 3/4" thick standard, 1" thick optional (bracket only).
- Available unfinished or finished. See the Finishing Program Section for availability and pricing.
- 6 day Standard lead-time, 2 day Code Red expedite lead-time; add 5-6 days for finishing.

Knee Brackets		
Size	**Style "A"**	**Style "B"**
6" x 6"		
9" x 9"		
12" x 12"		

Installation Cleats

- All published species available.
- Use Design Charge plus square foot Material Charge.
- Material Category B.
- Installation cleats sold in pairs.
- Brackets are 3/4" x 3" wide, sized 1-1/2" longer than the appropriate bracket for installation.
- Top cleat is designed to overlap back cleat by 3/4".
- Machine edge two long and one short edge; B2 profile on one short edge (leading edge).
- Available unfinished or finished. See the Finishing Program Section for availability and pricing.
- 6 day Standard lead-time, 2 day Code Red expedite lead-time; add 5-6 days for finishing.

Installation Cleats		
Cleat Size	**Bracket Size**	**Design Charge**
Top: 3" x 8-1/4"	6" x 6"	
Back: 3" x 7-1/2"		
Top: 3" x 11-1/4"	9" x 9"	
Back: 3" x 10-1/2"		
Top: 3" x 14-1/4"	12" x 12"	
Back: 3" x 13-1/2"		

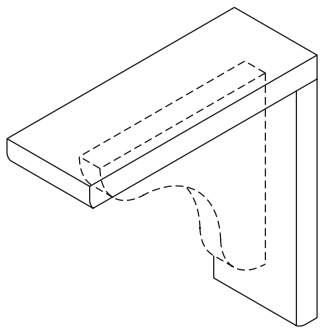

Marketing Support Materials

To assist our customers, Conestoga offers a variety of Marketing Support Materials. For a complete list of available materials see the Literature Request Order Form included in the Order Forms Section of this manual.

Product Manuals

Conestoga has two product manuals to inform and educate our customers about the extensive line of components that we offer. Manual pages are three-hole punched to be placed into three-ring binders so information can be easily located regarding new products and services. Each page is dated and numbered by section, which assists our customers in updating manuals with supplemental product information.

Custom Product Manual: Our Custom Product Manual guides you through the wide range of custom products and options that makes Conestoga the leading supplier of components to the Custom Kitchen & Bath industry. From doors and drawer fronts to a spectacular array of accessories, storage and organizational items as well as a broad selection of specialty products, Conestoga helps our customers build high quality kitchens in a variety of designs and price points.

Cabinets Systems Product Manual: Conestoga's Cabinet Systems include Advantage Framed Cabinetry and Vesta Full Access Cabinetry. Our Cabinet Systems Product Manual contains detailed product specifications and pertinent information on how we do business with our customers. Information includes cabinet line drawings, standard and custom size ranges, options, finishes, species and more!

An interactive PDF of the Custom and Cabinet Systems manuals is available on the Customer Business Portal under the "Marketing Resources" tab.

Interactive Tools

Customer Business Portal: Obtain a user name and password and visit our online Customer Business Portal at https://my.conestogawood.com. This customer-only site allows you to view quotes orders, print acknowledgements and invoices and track shipments 24 hours a day, 7 days a week. You will also find marketing materials such as product literature, various PDF files and drawings you can use as tools to help market your own product lines. Contact Customer Service to sign up today. Con-Nex, our online quoting and ordering software is also housed within our Customer Business Portal.

Con-Nex®: Our order entry software package provides an easy way to obtain instant pricing and electronically place orders. For more information about our online quoting and ordering system, contact Conestoga Customer Service or your Sales Representative.

2Configure: 2Configure design software brings time-saving convenience to selling Conestoga Advantage Framed or Vesta Full Access cabinetry, featuring a wide variety of custom door designs. Easily bring your customer's vision to life - use 2Configure to select cabinetry and door designs. Complete your kitchen layout and generate realistic 3D renderings for your customers to review. As you design, the 2Configure software automatically calculates product costs, and when finalized, the project can be seamlessly placed into Con-Nex and turned into a Conestoga order. www.advanceware.com/cws

Website: ConestogaWood.com was developed to provide an online look at our wide variety of kitchen and bath components. You'll find images of doors, drawer fronts, cabinet systems, drawer boxes and much more! Use the site as an online brochure to select and compare door styles, profiles, finishes to name a few. Check out the news area for the most up-to-date information about products and our company.

Conestoga's proprietary **Door Designer** which is accessed through ConestogaWood.com is your opportunity to create a unique door style to suit your taste. This tool allows you to select the material, design options and the finish desired with the ability to view the door design in a kitchen layout. Additionally, once you've established an account, the designs you've created are able to be named and can be saved with all the details that you've included for future reference or refinement.

Marketing Support Materials

Brochures

To assist our customers in their selling efforts, Conestoga offers a variety of printed materials for your convenience.

Finishing Color Guide: Featuring several full kitchens, this generic brochure includes an assortment of species, finish and glaze combinations in both wiping stains and paint options. Void of Conestoga's name and logo, this brochure was designed to supplement your own literature. Minimum of 10 brochures per order. part #2600722A.

Product Brochure: This full-line color, 40-page brochure features many of Conestoga's most popular door and drawer front designs. Complementary products such as drawer boxes, mouldings, and accessories are also included. A variety of finishing options and specie information are highlighted in the brochure. Minimum of 10 brochures per order. part #2600705A.

Refacing Brochure: This generic, eight page full-color brochure features door and drawer front designs, mouldings, convenience items along with "before" and "after" photographs of a refaced kitchen. Including all the products a refacer would typically use when upgrading a kitchen, space is provided on the back page of this brochure to put your company's name, address and logo. Minimum of 10 brochures per order. part #2600688A.

Special Designs Brochure: This 20-page brochure features products that are manufactured for premier custom designs. This brochure shows you a sample of what is possible with exotic specie options, impressive mullion and arched valance configurations, specialty door designs, front frames, custom finish matches, etc. Minimum of 10 brochures per order. part #2600645A.

Inspired Design Brochure: This unbranded brochure features 32 door styles and 8 kitchen images. Inspired Design features doors shown in kitchen style catagories of Farmhouse, Traditional, Modern, Transitional, Slim Shaker and Shaker. Utilize this brochure as your own, but it does include Conestoga nomenclature. Minimum of 10 brochures per order. part #2601362A.

Product Highlight Sell Sheets

These reference sheets are designed to highlight specific product categories and options. Ask your Sales Representative for a copy of the latest Conestoga "Sell Sheets" or visit the Customer Business Portal to download.

Marketing Support Materials

Order Forms

Conestoga provides a variety of order forms for specific products. A master copy of these forms is contained in the Order Forms Section of this binder.

Point of Purchase Items

Finish Sample Kits: Conveniently packaged for easy transport or immediate display, most Sample Kits are specie specific and contain several popular glazed and non-glazed finish combinations. Each chip is individually labeled with the specie, finish treatment and expiration date. See the Finishing Program Section of this manual for pricing and a complete listing of specie availability, cost and finish combinations represented within each kit.

Prism Paint Fan Deck: This fan deck features a color swatch for 1,400 custom paint colors available through this extensive offering. Help your customers narrow down their color choice prior to ordering a sample. These fan decks are priced and can be ordered using part #2602036A.

Moulding Sample Kits: These three distinctively different kits contain over 85 individually labeled moulding profile samples. The 6" cross sections serve as an attractive visual tool to assist your customers in making quick and intelligent moulding selections.

- Crown Accent Moulding Kit: Features over 20 standard crown and insert moulding samples, allowing your customers to experiment with multiple combinations of crown and accent mouldings. This kit can be ordered using part #2600597A.
- Accessory Moulding Kit: Samples of over 25 items including profiles such as base board, light rail and various trim mouldings.This kit can be ordered using part #2600596A.
- Non-Standard Moulding Kit: Features over 20 individual profiles from our non-standard moulding program and includes crowns, coves, case, trim and accent mouldings. This kit can be ordered using part #2600621A.

Profile Sample Kits: The cross-sections contained in each of these kits allow you to review profile combinations without incurring the expense of purchasing multiple sample doors.

- Panel Raise and Bead Kits: Includes 14 panel raises and 7 framing beads. Can be ordered using part #2600582A.
- Edge Profile Kit: Features over 25 individual edge profiles. Can be ordered using part #2600595A.

Marketing Support Materials

Point of Purchase Items (continued)

Allure DLV Sample Kit: Conestoga's enhanced Allure DLV program is represented by this kit containing 5-3/4" x 5-3/4" sample chips of all solid colors, woodgrains and textures. This kit also includes our Allure Super Matte colors. Also included are 5-3/4" x 5-3/4" assembled door corners of several popular door designs. Each item within the kit is individually labeled with pertinent information regarding offering and availability. Allure DLV Sample Kits can be ordered using part #2602416A.

Intrigue-Vogue TTS Sample Kit: The aggressively priced Intrigue TTS and Vogue TTS collections consist of differing textures and colors within the two offerings. The Intrigue line exhibits various patterns ranging from realistic woodgrains to neutral solids. The Vogue offering provides a more subtle texture over some of the most attractive and realistic woodgrain patterns in the industry. Sample chips for each collection measure 5-1/2" x 9-3/4". Raw edge Intrigue samples are 1/4" thick and Vogue samples are 8mm thick and edgebanded. The Intrigue-Vogue TTS Sample Kit can be ordered using part #2602909A.

Strata TTS Sample Kit: Strata Thermally Textured Surfaces (TTS) is represented by sample pieces measuring 8mm x 4-1/8" x 11-5/8". Each piece accurately reflects the color, pattern and depth of texture, and is labeled with the color, code number and texture information. Strata TTS Sample Kits Order using Con-Nex or through Customer Service.

Synchronicity Sample Kit: This collection provides a true look at the PET, UV Lacquer High Gloss and Super Matte materials that together make up the Synchronicity program. This kit includes samples of our entire Synchronicity High Gloss offering as well as our Synchronicity Super Matte colors. Enclosed in each kit are samples of High Gloss woodgrains, directional and non-directional patterns, along with solid colors and our Super Matte solid colors. Synchronicity Sample Kits can be ordered using part #2602528A.

Individual Sample Chips: Sample Chips within each Alternative Material Sample Kit can be purhased individually. Samples are labeled and sized accordingly by color and program to fit into existing Sample Kits seamlessly.

Program	Sample Chip Size	Price Per Chip (Net)
Allure DLV	5-3/4" x 5-3/4"	
Intrigue TTS	5-1/2" x 9-3/4"	
Strata TTS	4-1/8" x 11-5/8"	
Vogue TTS	5-1/2" x 9-3/4"	
Synchronicity High Gloss	4" x 6"	
Synchronicity Super Matte	4" x 6"	

☐ Order ☐ Quote

Door/Drawer Front Order Form #1

Customer Name:	Page: of	Order Date:
Ship To:	Customer#:	
	PO#:	
	Expedites: ☐ Red (50% upcharge) ☐ Blue (35% upcharge)	
Attention:	Shipping Instructions:	
Phone#:		

Door Design Information

Design:			
Thickness: ☐ 3/4" ☐ 1"			
Specie:			
Grade: ☐ Standard ☐ Premium ☐ Rustic Knotty ☐ PGHM			
Panel Raise:	MDF Panel: ☐ Yes ☐ No		
Edge Profile:	Framing Bead:		
Finish: _____ Glaze: _____		☐ Traditional ☐ Soft Wipe ☐ Pinstripe	
Sheen: ☐ 10° ☐ 30°			
Special Instructions:			

Drawer Front Design Information

Design:			
Thickness: ☐ 3/4" ☐ 1"	Grain Direction: ☐ Horizontal ☐ Vertical		
Specie:			
Grade: ☐ Standard ☐ Premium ☐ Rustic Knotty ☐ PGHM			
Panel Raise:	MDF Panel: ☐ Yes ☐ No		
Edge Profile:	Framing Bead:		

Doors

Qty	Width	Height	Instructions
	Total Doors 0		

Drawer Fronts

Qty	Width	Height	Instructions
	Total Drawer Fronts 0		

Miscellaneous Items:

Door/Drawer Front Order Form #1

Customer Information

- Select Order or Quote.
- Fill in all header information to insure your order is processed correctly. Missing information may cause a delay to your order.
- Fill in the page number. Since it is possible for pages to separate during transmission, numbering them ensures that your order is processed correctly and in a timely manner.
- Use unique purchase order numbers or names for every purchase order submitted to Conestoga. This will help eliminate duplication of orders.

Door and Drawer Front Information

Design
- In the space provided, enter the door design and drawer front design. Design selections can be found in Sections 4, 5 and 6 int the Custom Product Manual.

Thickness
- Choose between the 3/4" or 1".

Specie
- Enter the wood specie in the space provided. When choosing Maple, specify Hard, Soft or PGHM. When choosing Birch or Oak specify Red or White.
- Not all designs are available in all species. Specie offering and availability can be found with each door design in the Custom Product Manual.

Grade
- Select choice of grade. See the Custom Product Manual for details about specie and grade characteristics.

Profiles
- See the Design Options Section of the Custom Product Manual for a listing of the available panel raises, edge profiles and framing beads. See the Offering and Availability pages adjacent to the desired door and drawer front for eligable profiles and thickness.

Panel Raise
- Enter the panel raise in the space provided.
- Please note that some panel raises are only available in 3/4".

Edge Profile
- Enter the edge profile in the space provided.
- See the Custom Product Manual, Design Options Section for edge profile and hinge boring compatibility.
- Please note that the L-297, L-304 and LC-inset edge profiles have an additional upcharge and extended lead-time.

Framing Bead
- Enter the framing bead in the space provided. Please refer to the Regular Bead as “Regular” and not “Standard.”

Finish
- If prefinished products are desired, enter finish, glaze color and application type, and topcoat sheen (10° or 30°) in the space provided. Leave blank if ordering unfinished products.
- Not all species are available in all finish combinations. Finish offering and availability can be found in Section 8 of the Custom Product Manual.

Grain Direction
- Doors will be manufactured with vertical grain direction unless specified otherwise. Horizontal grain direction can be requested.
- When ordering drawer fronts, choose between horizontal and vertical grain. Horizontal grain is standard on most drawer fronts unless otherwise specified.

Special Instructions
- Please indicate any special options that pertain to the entire order. Any other design options, such as hinge boring, specific framing widths, panel routing, sanding options, weathered grain, etc. should also be entered here. Refer to the Custom Product Manual for all available design options.

Door and Drawer Front Details
- Qty: Enter the desired quantity here.
- Width/Height: Enter door or drawer front size.
- Instructions: Enter any specific information for the listed product. Options that can be entered here include, but are not limited to: frame only, multi-panel instructions, specific number of lites for mullion doors, or special edge profiles.

Miscellaneous Items

- This space can be used to order items other than doors and drawer fronts. Please note that additional order forms are available for many of our ancillary products.

☐ Order ☐ Quote

Door/Drawer Front Order Form #1-A

Customer Name:	Page: of	Order Date:
Customer#:	PO#:	

Note: Door/drawer front species, grade, profile selections and finish assumed to be the same as indicated on Door/Drawer Front Order Form #1. Please note if different.

Doors				**Drawer Fronts**			
Qty	Width	Height	Instructions	Qty	Width	Height	Instructions
	Total Doors 0				Total Drawer Fronts 0		

Special Instructions:

Door/Drawer Front Order Form #1-A

Customer Information

- Select Order or Quote.
- Fill in all header information to insure your order is processed correctly. Missing information may cause a delay to your order.
- Fill in the page number. Since it is possible for pages to separate during transmission, numbering them ensures that your order is processed correctly and in a timely manner.
- Use unique purchase order numbers or names for every purchase order submitted to Conestoga. This will help eliminate duplication of orders.

Door and Drawer Front Information

Door and Drawer Front Details

- Qty: Enter your desired quantity here.
- Width/Height: Enter door or drawer front size.
- Instructions: Enter any specific information for the listed product. Options that can be entered here include, but are not limited to: frame only, multi-panel instructions, specific number of lites for mullion doors or special edge profiles.

Special Instructions

- Please indicate any special options that pertain to the entire order. Any other design options, such as hinge boring, specific framing widths, panel routing, sanding options, weathered grain, etc. should also be entered here. Refer to the Custom Product Manual for all available design options.

☐ Order ☐ Quote

Sequential Grain Match Order Form #2

Customer Name:	Page: of	Order Date:
Ship To:	Customer#:	
	PO#:	
	Shipping Instructions:	
Attention:		
Phone#:		

Door Style: _____ Specie/Alternative Material Color: _____

Finish: _____ Glaze: _____ ☐ Traditional ☐ Soft Wipe ☐ Pinstripe

Sheen: ☐ 10° ☐ 30°

Concealed Hinge Boring ☐ Pattern"A" (cup only) ☐ Pattern"A" (w/insert holes) ☐ Pattern"B" (cup only) ☐ Pattern"B" (w/insert holes)

Special Instructions:

Cabinet#	Configuration#	Grain
		☐ Vertical (max. configuration size 46"w x 94"h) ☐ Horizontal (max. configuration size 94"w x 46"h)

Position#	Size	Door/Drawer	Hinge Drilling	Notes
A	_____ W x _____ H	☐ Door ☐ Drawer	☐ L ☐ R	
B	_____ W x _____ H	☐ Door ☐ Drawer	☐ L ☐ R	
C	_____ W x _____ H	☐ Door ☐ Drawer	☐ L ☐ R	
D	_____ W x _____ H	☐ Door ☐ Drawer	☐ L ☐ R	
E	_____ W x _____ H	☐ Door ☐ Drawer	☐ L ☐ R	
F	_____ W x _____ H	☐ Door ☐ Drawer	☐ L ☐ R	

Cabinet#	Configuration#	Grain
		☐ Vertical (max. configuration size 46"w x 94"h) ☐ Horizontal (max. configuration size 94"w x 46"h)

Position#	Size	Door/Drawer	Hinge Drilling	Notes
A	_____ W x _____ H	☐ Door ☐ Drawer	☐ L ☐ R	
B	_____ W x _____ H	☐ Door ☐ Drawer	☐ L ☐ R	
C	_____ W x _____ H	☐ Door ☐ Drawer	☐ L ☐ R	
D	_____ W x _____ H	☐ Door ☐ Drawer	☐ L ☐ R	
E	_____ W x _____ H	☐ Door ☐ Drawer	☐ L ☐ R	
F	_____ W x _____ H	☐ Door ☐ Drawer	☐ L ☐ R	

Sequential Grain Match Order Form #2

Customer Information

- Select Order or Quote.
- Fill in all header information to insure your order is processed correctly. Missing information may cause a delay to your order.
- Fill in the page number. Since it is possible for pages to separate during transmission, numbering them ensures that your order is processed correctly and in a timely manner.
- Use unique purchase order numbers or names for every purchase order submitted to Conestoga. This will help eliminate duplication of orders.

Door and Drawer Front Information

Door Style

- Specify specie or Alternative Material.
- For complete information on edgebanded wood door designs, see Section 4 Wood Doors and Drawer Fronts in the Custom Product Manual.
- For complete information on edgebanded door designs, see Section 5 MDF/Alternative Materials in the Custom Product Manual.

Specie/Alternative Material Color

- Enter the wood specie or Alternative Material color in the space provided.
- Wood designs not available in all species. Specie offering and availability can be found in the Custom Product Manual.

Finish

- If plywood edgebanded design is selected enter finish, glaze color and application type and topcoat sheen (10° or 30°) in the space provided.
- Not available in all finish combinations. Finish offering and availability can be found in Section 8 of the Custom Product Manual.

Concealed Hinge Boring

- Select concealed hinge boring locations. “No hinge boring” is standard unless otherwise specified.
- Specify hinge drilling left or right as required.

Special Instructions

- Indicate any special options that pertain to the entire order. Refer to the Custom Product Manual Offering and Availability pages adjacent to door design selected for available design options.

Cabinet#

- Indicate which cabinet the parts are being ordered for.

Configuration#

- Enter the configuration number. To receive the Sequence Grain Match Option, you must specify each cabinet configuration using Conestoga’s sequential grain matching templates.
- Sequential grain matching (SGM) templates are available upon request. Contact Customer Service or your Sales Representative.

Grain Direction

- Doors and drawer fronts will be manufactured with vertical grain direction unless specified otherwise.
- Maximum configuration size that can receive vertical grain matching is 46"w x 94"h.
- Maximum configuration size that can receive horizontal grain matching is 94"w x 46"h.
- Sequential grain matching is available on all corresponding pieces of individual cabinets. Grain will not match from cabinet to cabinet.

Position

- Following the numeric sequence of the template, enter the width and height for each position of the individual pieces within a cabinet.

Size

- Enter door or drawer front size.

Door/Drawer

- Choose whether the piece is being used as a door or a drawer front. Drawer fronts will not receive hinge drilling.

☐ Order ☐ Quote

Alternative Materials Order Form #3

Customer Name:	Page: of	Order Date:
Ship To:	Customer#:	
	PO#:	
	Expedites: ☐ Red (50% upcharge) ☐ Blue (35% upcharge)	
Attention:	Shipping Instructions:	
Phone#:		

Door Information

Product Line: ☐ Allure DLV ☐ Intrigue TTS ☐ Strata TTS ☐ Vogue TTS ☐ Synchronicity High Gloss ☐ Synchronicity Super Matte

Door Design:

Color Code/Name:

Panel Grain Direction: ☐ Vertical ☐ Horizontal

Drawer Front Information

Product Line: ☐ Allure DLV ☐ Intrigue TTS ☐ Strata TTS ☐ Vogue TTS ☐ Synchronicity High Gloss ☐ Synchronicity Super Matte

Drawer Front Design:

Color Code/Name:

Panel Grain Direction: ☐ Vertical ☐ Horizontal

Special Instructions:

Doors

Qty	Width	Height	Instructions
	Total Doors 0		

Drawer Fronts

Qty	Width	Height	Instructions
	Total Drawer Fronts 0		

Miscellaneous Items:

Alternative Materials Order Form #3

Customer Information

- Select Order or Quote.
- Fill in all header information to ensure your order is processed correctly. Missing information may cause a delay to your order.
- Fill in the page number. Since it is possible for pages to separate during transmission, numbering them ensures that your order is processed correctly and in a timely manner.
- Use unique purchase order numbers or names for every purchase order submitted to Conestoga. This will help eliminate duplication of orders.

Door and Drawer Front Information

Product Line

- Select the desired Alternative Material Program.

Door/Drawer Front Design

- In the space provided, enter the door design and drawer front design. Design selections can be found in Section 5 of the Custom Product Manual.

Color/Code Name

- Enter the desired color along with the corresponding color code, if applicable.

Panel Grain Direction

- Slab and 5-Piece doors will be manufactured with vertical grain panel direction while 3-Piece doors will be manufactured with horizontal grain panel direction, unless specified otherwise.
- When ordering drawer fronts, choose between horizontal and vertical grain. Horizontal grain is standard on most drawer fronts unless otherwise specified.

Special Instructions

- Please indicate any special options that pertain to the entire order. Any other design options such as hand pulls, concealed hinge boring or sample ID label should be entered here.

CONESTOGA™ WOOD SPECIALTIES

☐ Order ☐ Quote

Moulding Order Form #5

Customer Name:	Page: of	Order Date:
Ship To:	Customer#:	
	PO#:	
	Shipping Instructions:	
Attention:		
Phone#:		

Standard 8' & 12' Moulding

Finish: _____ Glaze: _____ ☐ Traditional ☐ Soft Wipe ☐ Pinstripe

Sheen: ☐ 10° ☐ 30°

Qty	Description	Specie	Length	Mounting Plate **Option X**

Special Instructions:

Random Length Cabinet Framing (S4S)

Qty	Specie	Width	Thickness

☐ Order ☐ Quote

Drawer Box Order Form #6

Customer Name:	Page: of	Order Date:
Ship To:	Customer#:	
	PO#:	
	Expedites: ☐ Blue (35% upcharge) ☐ Red (50% upcharge)	
Attention:	Shipping Instructions:	
Phone#:		

5/8" Thick Four-sided Dovetail Drawer Boxes (all drawer boxes are assembled)

Specie: ☐ Hard Maple ☐ Soft Maple ☐ Walnut ☐ Natural Birch (prefinished) ☐ Natural Birch (w/unfinished dovetails)

Bottom Reveal: ☐ 1/2" (standard) ☐ 3/8"

Finish Options: (Hard Maple, Soft Maple and Walnut only) ☐ Unfinished ☐ Standard UV ☐ Hand Spray (upcharge)

Top Edge Profile: ☐ Eased Edge 1/16" Radius (standard) ☐ Eased Edge Front & Back Bull-nosed ☐ Machine Edge ☐ Sides 1/8" Routed Edge

Special Instructions:

Drawer Box Information				Place an X to select Options									
				Undermount Notching			Blum TANDEM Clip Options				Cutlery Tray		
Qty	Height	Width	Depth	Std 1-3/8"	Wide 2-1/2"	Hook Hole	Pre-drilled	Installed	Hand Pull	3/8" Thick Bottom	Loose	Sized to Fit	Additional Options & Special Instructions

Miscellaneous Items:

Drawer Box Order Form #6

Customer Information

- Select Order or Quote.
- Fill in all header information to insure your order is processed correctly. Missing information may cause a delay to your order.
- Fill in the page number. Since it is possible for pages to separate during transmission, numbering them ensures that your order is processed correctly and in a timely manner.
- Use unique purchase order numbers or names for every purchase order submitted to Conestoga. This will help eliminate duplication of orders.

Drawer Box Information

Specie

- Choose from standard wood species: Natural Birch (with or without finished dovetails), Hard Maple, Soft Maple or Walnut.
- Hard Maple and Soft Maple drawer boxes are manufactured with either a 1/4" or 3/8" Hard Maple plywood bottom.
- Natural Birch drawer boxes are manufactured with a 1/4" Natural Birch plywood bottom or a 3/8" Hard Maple plywood bottom.
- Walnut drawer boxes are manufactured with a 1/4" Walnut plywood bottom only.
- If alternative specie is desired, specify in the "Special Instructions" box. Alternative specie drawer boxes are manufactured with matching specie 1/4" plywood bottoms.

Bottom Reveal

- Check the box for the appropriate reveal height to accommodate your drawer glide hardware.
- Both 1/2" and 3/8" reveals use a standard bottom thickness of 1/4".

Finish Options

- Select the appropriate box to get your Maple or Walnut drawer boxes finished or unfinished. Natural Birch drawer boxes standard with UV finish only.

Top Edge Profiles

- Choose the top edge profile by checking the appropriate box.
- The Eased Edge 1/16" Radius is standard, all other edge profiles will incur an upcharge.
- See the Drawer Box Section of the Custom Product Manual for illustrations and additional specifications.

Drawer Box Information

- Enter the quantity, height, width and depth for each drawer box.
- Heights are available from 2" to 12".
  - When ordering boxes with 1/4" bottoms, heights must be ordered in 1/2" increments.
  - When ordering boxes with 3/8" bottoms, overall box heights must be increased by 1/8".
- Available widths are 3" to 45", available in 1/16" increments.
- Available depths are 3" to 31", available in 1/16" increments.

Options

- Check the appropriate boxes to receive options on your drawer box.
  - Specify handpull design: S for standard, C for circle and E for elipse.
- When ordering a cutlery divider, you may either enter the overall dimensions of the drawer box or the dimensions of the cutlery divider. If entering the drawer box dimensions, check the box marked "Sized to Fit." If entering the cutlery divider dimensions, check the box marked "Loose."
- Enter the cutlery divider design in the "Additional Options" box.

Miscellaneous Items

- This space can be used to order items other than drawer boxes such as knife blocks, spice and can racks, etc. Please note that additional order forms are available for many of our ancillary products.

Specialty Drawer Box Order Form #6-A

Customer Name:	Page: of	Order Date:
Ship To:	Customer#:	
	PO#:	
	Expedites: ☐ Red (50% upcharge) ☐ Blue (35% upcharge)	
Attention:	Shipping Instructions:	
Phone#:		

5/8" Thick Four-sided Dovetail Drawer Boxes (all drawer boxes are assembled)

Specie: ☐ Hard Maple ☐ Natural Birch (prefinished) ☐ Soft Maple ☐ Natural Birch (w/unfinished dovetails) ☐ Walnut

Bottom Reveal: ☐ 1/2" (standard) ☐ 3/8"

Finish Options: (Hard Maple, Soft Maple and Walnut only) ☐ Unfinished ☐ Standard UV ☐ Hand Spray (upcharge)

Top Edge Profile: ☐ Eased Edge 1/16" Radius (standard) ☐ Eased Edge Front & Back Bull-nosed Sides ☐ Machine Edge ☐ 1/8" Routed Edge ☐ 1/8" Offset ☐ Bull-nosed

Special Instructions:

Back Recessed Option

Qty	Height	Width	Depth	Add X to select option: Undermount Notching Std 1-3/8"	Undermount Notching Wide 2-1/2"	Undermount Notching Hook Hole	Blum TANDEM Clip Options Pre-drilled	Blum TANDEM Clip Options Installed	Hand Pull	3/8" Thick Bottom	Additional Options & Special Instructions

Sizes	
A	
B	
C	

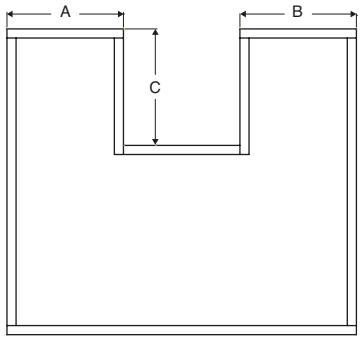

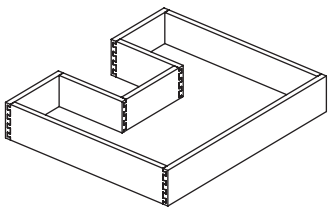

Charging Station Rout Option

Qty	Height	Width	Depth	Add X to select option: Undermount Notching Std 1-3/8"	Undermount Notching Wide 2-1/2"	Undermount Notching Hook Hole	Blum TANDEM Clip Options Pre-drilled	Blum TANDEM Clip Options Installed	Hand Pull	3/8" Thick Bottom	Additional Options & Special Instructions

Sizes	
A	
B	
C	
D	

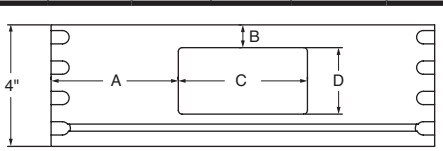

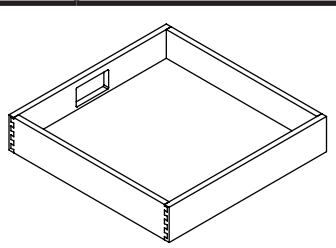

Drawer Box Order Form #6-A

Customer Information

- Select Order or Quote.
- Fill in all header information to insure your order is processed correctly. Missing information may cause a delay to your order.
- Fill in the page number. Since it is possible for pages to separate during transmission, numbering them ensures that your order is processed correctly and in a timely manner.
- Use unique purchase order numbers or names for every purchase order submitted to Conestoga. This will help eliminate duplication of orders.

Drawer Box Information

Specie

- Choose from standard wood species: Natural Birch (with or without finished dovetails), Hard Maple, Soft Maple or Walnut.
- Hard Maple and Soft Maple drawer boxes are manufactured with either a 1/4" or 3/8" Hard Maple plywood bottom.
- Natural Birch drawer boxes are manufactured with a 1/4" Natural Birch plywood bottom or a 3/8" Hard Maple plywood bottom.
- Walnut drawer boxes are manufactured with a 1/4" Walnut plywood bottom only.
- If alternative specie is desired, specify in the "Special Instructions" box. Alternative specie drawer boxes are manufactured with matching specie 1/4" plywood bottoms.

Bottom Reveal

- Check the box for the appropriate reveal height to accommodate your drawer glide hardware.
- Both 1/2" and 3/8" reveals use a standard bottom thickness of 1/4".

Finish Options

- Select the appropriate box to get your Maple or Walnut drawer boxes finished or unfinished. Natural Birch drawer boxes standard with UV finish only.

Top Edge Profiles

- Choose the top edge profile by checking the appropriate box.
- The Eased Edge 1/16" Radius is standard, all other edge profiles will incur an upcharge.
- See the Drawer Box Section of the Custom Product Manual for illustrations and additional specifications.

Drawer Box Information

- Enter the quantity, height, width and depth for each drawer box.
- When ordering boxes with 1/4" bottoms, heights must be ordered in 1/2" increments.
- When ordering boxes with 3/8" bottoms, overall box heights must be increased by 1/8".
- Available widths are 3" to 45", available in 1/16" increments.
- Available depths are 3" to 31", available in 1/16" increments.
- Specify all dimensions in the tables provided:
  - For Back Recessed Option specify dimensions A, B and C.
  - Charging Station Rout Option specify dimensions A, B, C and D.
- Select or indicate any drawer box options in the columns accordingly.

Back Recessed Option

- Minimum drawer box width is 12".
- Must specify A, B and C dimensions.
- Recess can be centered or off-set from either side.
- Minimum dimension for A and B is 4".
- Minimum dimension for C is 3-5/8".

Charging Station Rout Option

- Minimum drawer box width is 12", minimum box height is 4".
- Must specify A, B, C and D dimensions.
- Charging rout can be centered or off-set from either side.
- Minimum dimension for A is 1".
- Minimum dimension for B is 1/2".
- Minimum dimension for C is drawer box width minus 2".
- Minimum dimension for D is drawer box height minus 1-1/2".

☐ Order ☐ Quote

Advantage Cabinet System Order Form #7

Customer Name:	Page: of	Order Date:
Ship To:	Customer#:	
	PO#:	
	Expedites: ☐ Green (35% upcharge) six cabinet limit	
Attention:	Shipping Instructions:	
Phone#:		

Cabinet Systems (see ordering instructions for availability and additional information)

☐ Assembly instructions (entire order). For instructions by cabinet specify in special instructions below.

1. Shelf Upgrade
☐ Solid Wood Shelf Upgrade (prefinished Natural Birch only)

2. Cabinet Specie
☐ Cherry
☐ Hard Maple
☐ Soft Maple
☐ Red Oak

3. Front Frame Specie
Specie: _____

4. Inset/Overlay
Inset:
☐ No Bead ☐ 3/8" Bead
☐ 1/4" Bead

Overlay:
☐ 1/4" ☐ 1/2"
☐ 1-1/4" ☐ 1-3/8"

5. Shelf Rest Options
☐ Brass
☐ Chrome

6. Drawer Boxes
Drawer Box Specie:
☐ Natural Birch prefinished w/finished Dovetails (standard)
☐ Natural Birch prefinished w/unfinished Dovetails
☐ Hard Maple ☐ Soft Maple ☐ Walnut
☐ Finished ☐ Unfinished (Hard Maple, Soft Maple & Walnut only)

7. Blum Drawer Glide w/Blumotion
Slides: ☐ Yes (standard) ☐ No Blum TANDEM Clip
Option:
☐ Pre-drilled ☐ Installed ☐ No Clip Option

8. ☐ **Toeboard Backer** (Plywood Backer only)

Finishing

☐ Entire Order ☐ Cabinets Only ☐ Door & Drawer Front Only
Finish: _____ Glaze: _____
☐ Traditional ☐ Soft Wipe ☐ Pinstripe

Sheen: ☐ 100° ☐ 30°

Door Information		Drawer Front Information	
Design:		Design:	
Thickness: ☐ 3/4" ☐ 1"		Thickness: ☐ 3/4" ☐ 1"	
Specie:		Specie:	
Grade: ☐ Standard ☐ Premium ☐ Rustic Knotty ☐ PGHM		Grade: ☐ Standard ☐ Premium ☐ Rustic Knotty ☐ PGHM	
Panel Raise:	MDF Panel: ☐ Yes ☐ No	Panel Raise:	MDF Panel: ☐ Yes ☐ No
Edge Profile:	Framing Bead:	Edge Profile:	Framing Bead:

Options

Door & Drawer Front Sanding: ☐ Face, Back, Edge Cross Grain Removal ☐ Edge Sanding	Hinge Boring: ☐ Pattern A (3mm) ☐ Pattern B (6mm) ☐ Cup Only ☐ Cup w/Insert Holes
Special Instructions:	Blum Hinges w/BLUMOTION ☐ Yes (standard) ☐ No

Advantage Cabinet Systems Order Form #7

Customer Information

- Select Order or Quote.
- Fill in all header information to insure your order is processed correctly. Missing information may cause a delay to your order.
- Fill in the page number. Since it is possible for pages to separate during transmission, numbering them ensures that your order is processed correctly and in a timely manner.
- Use unique purchase order numbers or names for every purchase order submitted to Conestoga. This will help eliminate duplication of orders.

Cabinet Systems Information

- Check box for assembly instructions included with entire order. For instructions by specific cabinet indicate in the special instructions section.

1. Shelf Upgrade – Upgrade to solid wood shelves (prefinished Natural Birch only) by checking the box.

2. Cabinet Specie – Select among the available species by checking the appropriate box.

- Cabinet front frames will be manufactured using Standard grade material in all cases unless a custom front frame is ordered.

3. Front Frame Specie – Use this entry field when the front frame specie differs from the Program cabinet species (Box 2). This is required information when ordering non-standard species.

4. Inset/Overlay – Select among the inset, overlay and hinge manufacturer's options by checking the appropriate boxes.

- When hinges are selected with inset doors, concealed hinge boring (pattern "B"-cup only) is included unless otherwise specified.
- When hinges are selected with overlay doors, concealed hinge boring (pattern "A"-cup only) is included unless otherwise specified.
- Specialty hinges will be supplied on specific cabinets whenever applicable. Refer to the Cabinet Systems Manual for more information.

5. Shelf Rest Option – Select either brass or chrome.

6. Drawer Boxes – Select drawer box specie by checking the appropriate boxes.

- Natural Birch with finished dovetail is the standard specie drawer box for Cabinet Systems. Natural Birch with unfinished dovetails, Hard Maple, Soft Maple, Walnut and many alternative species are available, upcharges apply. If alternative specie is desired, specify in the Special Instructions box. Alternative specie drawer boxes are manufactured with matching specie 1/4" plywood bottoms.
- Select yes to receive Blum TANDEM drawer slides. If Blum TANDEM clip options are required, check the appropriate box.

7. Drawer Glide/Hardware Option

- Select drawer slides and hardware options.

8. Toeboard Backer

- Cabinets are priced without toeboard backers and carry an upcharge if toeboard backers are selected.

Finishing

- Indicate if you want cabinets, doors and drawers fronts, or the entire order finished.
- Enter finish, glaze color and application type and topcoat sheen (10° or 30°) in the space provided. Leave blank if ordering unfinished products.

Door and Drawer Front Information

This section is for ordering any door or drawer front design. See the Custom Product Manual for a listing of the available panel raises, edge profiles, and framing beads for each door design.

- Hard Maple and Soft Maple are Standard grade for Cabinet Systems door and drawer fronts. You may choose an alternative material by checking the appropriate box (custom material pricing applies).
- All doors and drawer fronts carry custom design charges.
- Cabinet front frames will be manufactured using Standard grade material. You may choose to select one of our other material grades.
- Not all door styles are available in every specie. See the Doors and Drawer Fronts Section of the Custom Product Manual for availability.

Options

- Select sanding options desired by checking the appropriate boxes.
- Select Concealed Hinge Bore pattern. Refer to the Custom Product Manual Design Options Section for information regarding Hinge Boring.

Special Options

- Please indicate any special options that pertain to the entire order in this area.

☐ Order ☐ Quote

Advantage Cabinet Systems Order Form #7-A

Customer Name:	Page: of	Order Date:
Customer#:	PO#:	

☐ Assembly instructions (entire order). For instructions by cabinet specify in special instructions below.

Note: Unexposed Ends will be assumed if Exposed or Flush Ends are not indicated. 3/4" Flush Ends are standard with exposed material. 3/4" Flush Unexposed Ends have shop grade veneer. When ordering Exposed or Flush Ends, please specify L=Left, R=Right, B=Both.

Qty	Cabinet Code #	Mark Option L, R, or B			Special Instructions
		1/2" Exposed	3/4" Flush Unexposed	3/4" Flush	
	Total Cabinets 0				

Advantage Cabinet Systems Order Form #7-A

Customer Information

- Select Order or Quote.
- Fill in all header information to insure your order is processed correctly. Missing information may cause a delay to your order.
- Fill in the page number. Since it is possible for pages to separate during transmission, numbering them ensures that your order is processed correctly and in a timely manner.
- Use unique purchase order numbers or names for every purchase order submitted to Conestoga. This will help eliminate duplication of orders.
- Check box for assembly instructions to be included with entire order. For instructions by specific cabinet indicate in the Special Instructions Section.

Ordering Cabinet Systems

- Specify the quantity for each cabinet and write the Cabinet Code Number in the boxes provided.
- Use the Wall, Base, Tall, Vanity, Home Office and Accessories Sections of the Advantage Cabinet Systems Manual to determine the Code Number for each cabinet you are ordering. Please double-check the letters and numbers in each Cabinet Code since the addition or omission of one letter or number could change the cabinet you are ordering.

Exposed and Flush Ends

- Determine if you want the visible ends of your cabinets to be 1/2" Exposed or 3/4" Flush Ends Exposed. Unexposed 3/4" Flush Ends are also available for thicker, unexposed sides. Birch veneer is not stainable. (See the Options Section of the Advantage Cabinet Systems Manual for additional specifications).
- Choose either option by writing in "L" for left side, "R" for right side, or "B" for both sides under the appropriate column. Please list L, R or B so Customer Service will know which side(s) you are specifying. If you choose left or right, the opposite side will be the standard 1/2" side for the particular cabinet you have chosen. For examples see the Pricing/Ordering Information Section of the Advantage Cabinet Systems Manual.
- Cabinets can be ordered with exposed ends on one side and flush ends on the other.

Special Instructions

- Use the Special Instructions area to indicate modifications or options for each cabinet. See the Options Section of the Advantage Cabinet Systems Manual for all available options, including these examples:
  - Extended Stiles
  - Matching Interior
  - Flush Toe
- Additional options that can be specified in this area include lazy susan and Soss hinge where applicable, no shelf, no front frame, no drawer glides, frame only doors, etc.
- Remaining space can be used to order any item not listed on this form. Please note that Order Forms are available for many of our ancillary products.

☐ Order ☐ Quote

Advantage Cabinet Systems Parts Order Form #7-B

Customer Name:	Page: of	Order Date:
Ship To:	Customer#:	
	PO#:	
	Expedites: ☐ Green (35% upcharge)	
Attention:	Shipping Instructions:	
Phone#:		

Finish: _____ Glaze: _____ ☐ Traditional ☐ Soft Wipe ☐ Pinstripe

Sheen: ☐ 10° ☐ 30°

Specie Codes

CH = Cherry HM = Hard Maple NB = Natural Birch RO = Red Oak SM = Soft Maple

Part				Choose: (L) Left or (R) Right (B) Both				Add X
Qty	Specie	Template Number	Part Size	Extended Stiles	1/2" Exposed	3/4" Flush Unexposed	3/4" Flush	Matching Interior
	Total 0							

Miscellaneous Items:

Advantage Cabinet Systems Parts Order Form #7-B

Customer Information

- Select Order or Quote.
- Fill in all header information to insure your order is processed correctly. Missing information may cause a delay to your order.
- Fill in the page number. Since it is possible for pages to separate during transmission, numbering them ensures that your order is processed correctly and in a timely manner.
- Use unique purchase order numbers or names for every purchase order submitted to Conestoga. This will help to eliminate duplication of orders.

Cabinet Parts Information

Specie Codes

- Note the various specie codes available for Cabinet parts.
- The specie code is required when ordering any Cabinet part.
- Use the CH, HM, RO or SM specie code if you are ordering flush or exposed ends.
- When ordering sides:
  - Use the CH, HM, RO or SM specie code to order a matching interior side with or without flush ends. Hard Maple will be used for Soft Maple side panels.
  - The Natural Birch (NB) specie code is used to order a side without an exposed or flush end.

Finishing

- Parts will be finished according to Advantage Cabinet Systems standards (ex: exposed ends, front frames, matching interior parts).

Ordering Parts

- Enter the quantity and specie for each part.

Template Number and Part Size

- Use the Cabinet Systems BOM's in Resources, Menu on the Customer Business Portal.
- Write the template number and part size in the appropriate columns of the order form. Orders cannot be processed unless both pieces of information are provided.

Options

- Select the options for the cabinet parts you are ordering. Not all options are available for every part.

Extended Stiles

- Select this option if ordering front frames with extended stiles. Specify left (L), right (R), or both (B).

Matching Interior

- Check this option to receive wood veneer that matches your front frame specie. Hard Maple will be used when Soft Maple plywood parts are ordered.
- This option is not available with prefinished interiors.
- This option applies to cabinet backs, tops and bottoms, sides, and shelves.

Exposed Ends

- Check this option for 1/2" thick sides with a matching veneer on the exterior face.

Flush Ends

- Check this option for 3/4" thick sides with either matching specie exposed veneer or mill option grade veneer for unexposed cabinet sides.

Miscellaneous Items

- This space can be used to order items other than cabinet parts. Please note that additional order forms are available for many of our ancillary products.

☐ Order ☐ Quote

Vesta Cabinet Systems Order Form #8

Customer Name:	Page: of	Order Date:
Ship To:	Customer#:	
	PO#:	
	Expedites: ☐ Green (35% upcharge)	
Attention:	Shipping Instructions:	
Phone#:		

Cabinet Systems: Vesta Cabinets (see ordering instructions in Cabinet Systems Manual for availability and additional information)

☐ Assembly instructions (entire order). For instructions by individual Cabinet specify in Special Instructions area below.

1. Cabinet Case Color

Plywood:

☐ Hard Maple ☐ White Birch ☐ Rift Cut White Oak
☐ Walnut ☐ Paint Grade
☐ Red Oak ☐ Cherry

☐ Color/Alternative Specie:_____
☐ Fog Grey (Particle Board Core)
☐ Coastal White (Particle Board Core)

2. Edgeband Color

☐ Match Case Color
☐ Match Door Color

3. Shelf Rest Option

☐ Brass ☐ Chrome

4. Drawer Box Specie

☐ Natural Birch prefinished w/finished Dovetails (standard)
☐ Natural Birch prefinished w/unfinished Dovetails
☐ Hard Maple ☐ Soft Maple ☐ Walnut
☐ Finished ☐ Unfinished (Hard Maple, Soft Maple & Walnut only)

5. Blum Drawer Glides w/BLUMOTION

Glides: ☐ Yes (standard) ☐ No

Blum TANDEM Clip Option:
☐ Pre-drilled ☐ Installed ☐ No Clip Option

6. Hinge Options

Blum INSERTA Hinge: ☐ Yes (standard) ☐ No

Finishing

☐ Entire Order ☐ Door & Drawer Fronts Only ☐ NA
Finish: _____ Glaze: _____ ☐ Traditional ☐ Soft Wipe ☐ Pinstripe

Sheen: ☐ 10° (standard) ☐ 30°

Alternative Material Door/Drawer Front Information

Product Line: ☐ Allure DLV ☐ Intrigue TTS ☐ Strata TTS ☐ Vogue TTS ☐ Synchronicity High Gloss ☐ Synchronicity Super Matte

Color Code/Name:

Door Design:	Drawer Front Design:
Panel Grain Direction: ☐ Vertical ☐ Horizontal	Panel Grain Direction: ☐ Vertical ☐ Horizontal

Wood Door/Drawer Front Information

Door Design:		Drawer Front Design:	
Specie/Grade:		Specie/Grade:	
Panel Raise:	MDF Panel: ☐ Yes ☐ No	Panel Raise:	MDF Panel: ☐ Yes ☐ No
Edge Profile:	Framing Bead:	Edge Profile:	Framing Bead:

Options

Door & Drawer Front Sanding: ☐ Cross Grain Removal, Face, Back, Edge

Hinge Boring: ☐ Vesta (Pattern B w/ Insert Holes) Other:_____

Vesta Cabinet Systems Order Form #8

Customer Information

- Select Order or Quote.
- Fill in all header information to insure your order is processed correctly. Missing information may cause a delay to your order.
- Fill in the page number. Since it is possible for pages to separate during transmission, numbering them ensures that your order is processed correctly and in a timely manner.
- Use unique purchase order numbers or names for every purchase order submitted to Conestoga. This will help to eliminate duplication of orders.

Vesta Cabinet Systems Information

Select or check box to include assembly instructions for entire order. For instructions by specific cabinet request in the Special Instructions section.

- Cabinet Case Material – Select among the available case colors by checking the appropriate box.
  - Choose from standard wood species or Alternative Material selections.
  - For non-standard case color/specie enter the plywood specie or Alternative Material color code/name. See Section 5 of the Custom Product Manual for Alternative Material colors.
- Edgeband Color – Select either Match Case Color or Match Door Color.
- Shelf Rest Option – Select either brass or chrome.
- Drawer Boxes – Select drawer box specie by checking the appropriate boxes.
  - Natural Birch with finished dovetail is the standard specie drawer box for Cabinet Systems. Natural Birch with unfinished dovetails, Hard Maple, Soft Maple and Walnut are available, upcharges apply. If other specie is desired, specify in the Special Instructions box. Alternative specie drawer boxes are manufactured with matching specie 1/4" plywood bottom.
- Drawer Glide/Hardware Option
  - Blum TANDEM drawer glides are included with cabinets requiring drawer glides. Select "No" if drawer glides are not desired.
  - If Blum TANDEM clip options are required, check the appropriate box.
- Hinges Options – Select to receive Blum INSERTA hinges.
  - Hinges default to "Yes", choose "No" if hinges are not desired. Vesta Hinge Boring (pattern “B” with insert holes) is included with hinge and cannot be overridden.
  - Specialty hinges will be supplied on specific cabinets whenever applicable. See Section 20 (Options) in the Cabinet Systems Manual for additional information.

Finishing

- Indicate if the entire order (except cabinet cases) or only doors and drawers fronts are to be finished. Select N/A if choosing Alternative Materials.
- Enter finish, glaze color and application type and topcoat sheen (10° or 30°) in the space provided. Leave blank if ordering unfinished products.

Alternative Material Door and Drawer Front Information

This section is for ordering any door or drawer front design in the Alternative Material programs. See the Custom Product Manual, Section 5 for a listing of the available colors and door designs for each program.

- All Allure DLV, Intrigue TTS, Strata TTS, Vogue TTS, Synchronicity High Gloss, and Synchronicity Super Matte colors are available. Check box for product line and enter the Code/Color name in the space provided.
- Enter door and drawer front design and select grain direction.

Wood Door and Drawer Front Information

This section is for ordering wood or MDF door or drawer front designs. See the Custom Product Manual for a listing of the available panel raises, edge profiles, and framing beads for each door design.

- Enter door and drawer front information in the space provided.
- Only 3/4” thick door designs are permitted with Vesta cabinetry.
- All door designs carry Custom Design Charges and Material Charges. See the Custom Product Manual for details.

Options

For Wood Doors/Drawer Fronts, select sanding options desired by checking the appropriate boxes. Select Concealed Hinge Bore pattern.

- If ordering Blum INSERTA Hinges you must select Vesta (Pattern B w/Insert Holes).
- If providing own hinges, select "Other" and enter the desired hinge bore pattern, with or without insert holes.

Special Options

- Please indicate any special options that pertain to the entire order in this area.

Vesta Cabinet Systems: Order Form #8-A

Customer Name:	Page: of	Order Date:
Customer#:	PO#:	

Options Key: FT = Flush Toe LTP = Loose Toe Platform STN = Square Toe Notch MCC = Matching Color Case
NHH = No Hinge Holes NSH = No Shelf Holes NDSH = No Drawer Slide Holes OS = Omit Shelving

Qty	Cabinet Code #	Options/Special Instructions

Total Cabinets: 0

Vesta Cabinet Systems Order Form #8-A

Customer Information

- Select Order or Quote.
- Fill in all header information to ensure your order is processed correctly. Missing information may cause a delay to your order.
- Fill in the page number. Since it is possible for pages to separate during transmission, numbering them ensures that your order is processed correctly and in a timely manner.
- Use unique purchase order numbers or names for every purchase order submitted to Conestoga. This will help eliminate duplication of orders.

Ordering Cabinet Systems

- Specify the quantity for each cabinet and write the Cabinet Code and sizes in the boxes provided.
- Use the Wall, Base, Tall, Vanity, Home Office and Accessories Sections of the Vesta Product Manual to determine the Cabinet Code and size for each cabinet being ordered. Double-check the letters and numbers in each Cabinet Code since the addition or omission of one letter or number could change the cabinet you are ordering.
- Enter options in Options/Special Instructions Section.
- Options key at the top of the page shows the code for common options. See Vesta Product Manual for additional options and features.
- Remaining space can be used to order any item not listed on this form. Please note that Order Forms are available for many of our ancillary products.

☐ Order ☐ Quote

Vesta Cabinet Systems Parts Order Form #8-B

Customer Name:	Page: of	Order Date:
Ship To:	Customer#:	
	PO#:	
	Expedites: ☐ Green (35% upcharge)	
Attention:	Shipping Instructions:	
Phone#:		

Cabinet Systems: Vesta Cabinets (see ordering instructions for availability and additional information)

Plywood Specie Codes

Standard Base Specie: WB = White Birch
Premium Specie: CH = Cherry HM = Hard Maple PG = Paint Grade RCWO = Rift Cut White Oak RO = Red Oak WAL = Walnut

Finish: _____ Glaze: _____ ☐ Traditional ☐ Soft Wipe ☐ Pinstripe

Sheen: ☐ 10° ☐ 30°

Alternative Material Color Code Name

Base Colors: CW = Coastal White FG = Fog Grey

Reference Custom Product Manual for Allure DLV, Intrigue TTS, Strata TTS, VogueTTS, Synchrocity High Gloss and Super Matte Color Code/Name

Qty	Specie-Grade/ Color Code-Name	Edgeband Color	Template Part #	Part Size	Options

Options Key: **FT** = Flush Toe **LTP** = Loose Toe Platform **STN** = Square Toe Notch **MCC** = Matching Color Case
NHH = No Hinge Holes **NSH** = No Shelf Holes **NDSH** = No Drawer Glide Holes **OS** = Omit Shelving
EXP = Exposed Ends

Vesta Cabinet Systems Parts Order Form #8-B

Customer Information

- Select Order or Quote.
- Fill in all header information to ensure your order is processed correctly. Missing information may cause a delay to your order.
- Fill in the page number. Since it is possible for pages to separate during transmission, numbering them ensures that your order is processed correctly and in a timely manner.
- Use unique purchase order numbers or names for every purchase order submitted to Conestoga. This will help eliminate duplication of orders.

Cabinet Parts Information

Specie Code - Grade / Color Code - Name

- **Plywood Parts**
  - Standard Case Specie: White Birch (WB)
  - Premium Specie Upgrades: Cherry (CH), Hard Maple (HM), Paint Grade (PG), Red Oak (RO), Rift Cut White Oak (RCWO) and Walnut (WAL)
  - Select Specie and Finish Option:
    - Eligible species for Matching Edgeband and Matching Case Color Options includes CH, HM, PG, RO, RCWO and WAL
    - Eligible species for Exposed Ends include CH, HM, PG and RO
- **Alternative Materials Parts**
  - Standard Case Colors: Coastal White and Fog Grey
  - All Intrigue TTS, Strata TTS and Vogue TTS colors are available in the Matching Case Color Option. See Section 5 of the Custom Product Manual for color codes and names.
  - Door Matching Edgeband Offering includes all Allure DLV, Intrigue TTS, Strata TTS, Vogue TTS, Synchronicity High Gloss and Synchronicity Super Matte programs.
- **Enter All Vesta Part Information**
  - Part Quantity
  - Specie-Grade or Color Code-Name
  - Edgeband Color
  - Template Part Number (Reference the Bill of Material in the Resources Menu on the Customer Business Portal).
  - Part Size (Reference the Bill of Material in the Resources Menu on the Customer Business Portal).
  - Options – Select the Options for each cabinet part being ordered. Not all options are available for every part. Reference Section 20 of the Cabinet Systems Manual for Options details. Reference Options Key at the bottom of the form.

Literature Request Form #9

Customer Name:	Page: of	Order Date:
Ship To:	Customer#:	
	PO#:	
	Shipping Instructions:	
Attention:		
Phone#:		

Custom Literature

Qty	Item	Part#	Qty	Item	Part#
	Custom Product Manual	2600653A		Guide to Refacing ($1.00 ea.)	2600688A
	Finishing Color Guide ($3.00 ea.)	2600722A		Special Designs Brochure ($2.00 ea.)	2600645A
	Full Line Brochure ($3.00 ea.)	2600705A		Inspired Design Brochure ($3.00 ea.)	2601362A

Cabinet Systems Literature

	Cabinet Systems Product Manual	2601374A			

Sell Sheets

	Allure - Decorative Laminate Veneer	2600830A		Strata - Thermally Textured Surfaces	2601038A
	Cabinet Systems – Advantage	2600689A		Synchronicity - High Gloss	2601041A
	Dovetail Drawer Boxes	2600658A		Synchronicity - Super Matte	2601078A
	Intrigue - Thermally Textured Surfaces	2601074A		Vogue - Thermally Textured Surfaces	2601073A

Additional (Digital-only) Literature available on the Customer Business Portal

Special Instructions:

CONESTOGA™ WOOD SPECIALTIES

Replacement Form #10

Customer Name:	Original Order #:
Customer#:	Original PO#:
Contact Name:	New PO#:
Email:	Shipping Instructions:
Phone:	

Line Number	Quantity	Replacement Reason (use key)	Requested Action (use key)

Action Key

Replacement Reason
1. Damaged in Shipping*
2. Issues w/Product Finishing*
3. Item (s) Missing
4. Received Incorrect Product*
5. Product out of Specification*
6. Warranty Replacement Request*

Requested Action
A. Replace Item(s)
B. Request Credit
C. Rework
D. Other (specify)

*Images are necessary to support requests. **Attach** supporting images, do not embed in email.

Please provide as much detail as possible (below) regarding the issue(s) referenced on this form.

Additional Information

This form is meant for Replacement products only.
Please see Pages 1.5 – 1.7 in the Custom Product Manual for additional information.